Proceedings of the 14th International Symposium on Process Systems Engineering – PSE 2021+
June 19-23, 2022, Kyoto, Japan © 2022 Elsevier B.V. All rights reserved.

Economic Analysis of a Hydrogen Liquefaction Process Based on Techno-Economic and Energy Optimization

Heechang Son[a], Bjørn Austbø[b], Truls Gundersen[b], Jihyun Hwang[c, *], Youngsub Lim[a, d *]

[a]*Department of Naval Architecture and Ocean Engineering, Seoul National University, Seoul, 08826, Republic of Korea*
[b]*Department of Energy and Process Engineering, Norwegian University of Science and Technology (NTNU), NO-7491, Trondheim, Norway*
[c]*Scool of energy technology, Korea Institute of Energy Technology, Naju, 58217, Republic of Korea*
[d]*Research Institute of Marine Systems Engineering, Seoul National University, Seoul 08826, Republic of Korea*
jihyun.hwang@kentech.ac.kr
s98thesb@snu.ac.kr

Abstract

Efforts to be eco-friendly are becoming essential, and hydrogen is attracting attention as an eco-friendly fuel. As the hydrogen demand increases, the interest in liquid hydrogen is increasing because it is safer and more efficient for large-scale hydrogen transport and storage than compressed gaseous hydrogen. Since hydrogen must be cooled to about −253 ℃ to be liquefied, this represents a high proportion of the cost in a hydrogen liquefaction plant. Reducing the unit price of hydrogen is the key to achieve a hydrogen economy, and it is also important to reduce the cost of the hydrogen liquefaction process for price competitiveness of liquid hydrogen. The purpose of this study, therefore, is to perform an economic analysis of a hydrogen liquefaction process based on both techno-economic and energy-based optimization. The objective functions for techno-economic optimization and energy optimization are total annualized cost and total power consumption, respectively. The results show that the influence of operating expenditure is greater than that of capital expenditures, and the cost of the compressors is dominant in the capital expenditures. These results provide technical background data that can be used to improve the economic viability of the hydrogen liquefaction process as an important element in the hydrogen economy.

Keywords: Hydrogen liquefaction process; Techno-economic optimization; Energy optimization; Economic analysis.

1. Introduction

Eco-friendly efforts to solve the climate crisis are becoming an essential factor, leading to an era of great energy transition. Accordingly, hydrogen is in the spotlight as a promising fuel in the future because of its advantages: 1) abundant amount, 2) higher gravimetric energy density than conventional fossil fuels, and 3) eco-friendly fuel with no carbon emission (Yin and Ju, 2020).

The hydrogen value chain can be divided into three areas (production, storage/transportation, and utilization), and various research and development efforts are underway to lower the unit price of hydrogen in each area. In the hydrogen storage/transportation stage, three methods are being discussed as promising means to replace the conventional compressed hydrogen gas in order to increase the storage and transportation efficiency; i.e. Liquid organic hydrogen carrier (LOHC), Ammonia (NH_3) and Liquid hydrogen (LH_2). LOHC is a method of storing hydrogen in a liquid compound, and methylcyclohexane (MCH) is often considered as a candidate for this. Similarly, NH_3 synthesis is widely considered as a method for storing and transporting hydrogen. In LH_2, the hydrogen is stored and transported in liquid form, similar to the method of liquefied natural gas (LNG).

Since LH_2 has the high volumetric energy density compared to the gaseous hydrogen and the high gravimetric energy density compared to the LOHC and NH_3, it is expected to be the most suitable hydrogen storage method in large-capacity scenarios. However, liquefying hydrogen is technically challenging.

First, hydrogen is liquefied at −253 °C, and therefore a harsher cryogenic environment than LNG is required. Accordingly, a hydrogen liquefaction process requires about 30 times higher energy consumption compared to a natural gas liquefaction process (e.g. typical specific energy consumption (SEC) of natural gas liquefaction is about 0.3 kWh/kg LNG, while a typical SEC of hydrogen liquefaction is about 10 kWh/kg LH_2). In addition, hydrogen molecules occur in two different spin isomers, orthohydrogen (ortho-H_2) and parahydrogen (para-H_2). Normal hydrogen (normal-H_2) that can be observed at room temperature is composed of 75 % ortho-H_2 and 25 % para-H_2. As hydrogen is cooled from room temperature, the ratio of spin isomers forming equilibrium hydrogen (equilibrium-H_2) changes. As the temperature is reduced, ortho-H_2 is converted into para-H_2, which is an exothermic process. Since the natural ortho-/para-H_2 conversion (OPC) process occurs relatively slowly, liquefied non-equilibrium-H_2 can be vaporized by the heat of conversion unless the OPC processes are rapidly achieved through catalytic reactions while cooling hydrogen. This is because the heat of conversion (about 1063 J/mol) is higher than the heat of vaporization of liquid hydrogen (about 954 J/mol) (Zhuzhgov et al., 2018). Therefore, in an actual hydrogen liquefaction plant, a catalyst-filled heat exchanger is used to achieve a catalytic reaction for rapid OPC, such that the conversion heat can be removed in the cooling process.

Currently, much effort is made to lower the unit price of hydrogen to achieve a hydrogen economy, and thereby it is important to reduce the cost of the hydrogen liquefaction process as much as possible in order to have price competitiveness for liquid hydrogen. This study, therefore, aims to present technical background data for an economical hydrogen liquefaction process design through economic analysis based on techno-economic and energy optimization.

2. Process description

The Claude cycle presented by Berstad et al. (2021) is selected as a base model for a hydrogen liquefaction process in this study. Figure 1 shows the process flow diagram of the hydrogen liquefaction process in consideration. First, hydrogen feed gas is introduced in the precooling cycle at a rate of 125 ton/day at 20 bar and 298.15 K. The hydrogen feed gas is cooled to 114 K by passing PC-HX in the precooling cycle and then enter the main cryogenic cycle. Here, it is assumed that any impurities are removed

through an adsorber before entering the main cryogenic cycle. A mixed refrigerant (MR) is used for the precooling cycle. The MR is composed of nitrogen (N_2), methane (C_1), ethane (C_2), propane (C_3), *n*-butane (*n*-C_4), and *i*-pentane (*i*-C_5). The MR is compressed to about 35 bar by two compression stages with intercoolers. It is assumed that the adiabatic efficiencies of each compressor and the pump in the precooling cycle are 85 % and 75 %, respectively. The high-pressure MR is pre-cooled to 114 K by passing PC-HX and then expanded to low pressure by a Joule-Thomson (J-T) valve bringing the stream to a lower temperature. The resulting low-temperature MR stream passes through PC-HX, cooling the hydrogen, and returns to the compression system.

After passing through an ortho-/para-H_2 conversion unit, the hydrogen gas is cooled from 117.9 K to 106 K in MC-HX2. The resulting hydrogen stream undergoes OPC through another conversion unit. In the simulation, equivalent heat exchangers using conversion reactor units are applied to simulate catalyst-filled heat exchangers for the OPCs as shown in Figure 1. The hydrogen is cooled to 22 K through HX3-HX8 with the OPCs and then expanded to 1.5 bar by a J-T valve. The final LH_2 conditions are 1.5 bar, 21.7 K, and 97 % para-LH_2 concentration. In the main cryogenic cycle, the normal-H_2 refrigerant is compressed to about 30 bar by four compression stages with intercooling in between. It is assumed that the adiabatic efficiency of C-3 and C-4 and the adiabatic efficiency of C-5 and C-6 are 82 % and 85 %, respectively. Side streams from the resulting refrigerant are drawn and expanded to intermediate pressures by expanders. The isentropic efficiency of each expander is assumed to be 85 %. The main refrigerant stream from MC-HX5 is depressurized by a liquid expander and a J-T valve. The resulting refrigerant stream at about 21 K passes through all heat exchangers and is returned to the compression system to provide the cooling duty. The side streams are mixed with the returning main refrigerant stream at intermediate pressure. The process parameters applied in the simulation are shown in Table 1.

Process modeling was done using Aspen HYSYS® V10.0. A modified Benedict-Webb-Rubin equation of state (MBWR) and the Peng-Robinson equation of state (PR) were applied to the main cryogenic cycle and precooling cycle, respectively.

3. Process optimization

For energy optimization, the net power consumption was used as the objective function, as shown in Eq.(1). The net power consumption can be calculated by subtracting the power produced in all *j* expander stages from the power consumed in all *i* compressor stages.

For techno-economic optimization, the cost estimation methodology presented by Turton et al. (2008) was used to calculate equipment cost, module cost and capital expenditures (*CAPEX*) of the hydrogen liquefaction process. Table 2 shows the equipment types considered here and their corresponding cost parameters. In this study, different types of heat exchangers for the precooling cycle and the main cryogenic cycle were selected in consideration of the type of refrigerant used. The cost of the catalyst used was assumed to be equal to 15 % of the cost of the heat exchanger without catalyst, and this assumption was used to calculate the cost of equivalent heat exchangers to which the OPCs are applied. The calculated *CAPEX* can be converted to an estimated annual *CAPEX* as shown in Eq.(2). Here, it was assumed that the interest rate (*i*) and the lifetime of the plant (*L*) are 10 % and 20 years, respectively. In addition, operating expenditures (*OPEX*) were estimated considering the total power consumption and the

electricity cost (c_{elec} = 0.06 USD/kWh) as shown in Eq.(3). Consequently, the total annualized cost (*TAC*) of the hydrogen liquefaction process can be calculated by summing annual *CAPEX* and *OPEX*. This was used as the objective function for the techno-economic optimization, as shown in Eq.(4).

$$\min \sum \dot{W}_{\text{total}} = \left(\sum_i \dot{W}_i - \sum_j \dot{W}_j \right) \tag{1}$$

$$\text{Annual } CAPEX = CAPEX \cdot \frac{(i * (1+i)^L)}{(1+i)^L - 1} \tag{2}$$

$$OPEX = c_{\text{elec}} \sum \dot{W}_{\text{total}} \tag{3}$$

$$\min TAC = \text{Annual } CAPEX + OPEX \tag{4}$$

Here, a genetic algorithm (GA) was used for the optimization, and the process optimization was performed by connecting the GA loaded from MATLAB R2021a with Aspen HYSYS®. Optimization variables include the discharge pressure of each compressor and the expansion pressure of each expander, as well as the MR flow rate and normal-H_2 flow rate that are the flow rates of refrigerants.

Table 1. Process parameters used in the simulations

Parameter	Value	Unit
Hydrogen feed pressure	20	bar
Hydrogen feed temperature	298.15	K
Hydrogen feed mass flow	125	t/d
Inlet fraction of para-H_2	25	mol %
Liquid hydrogen pressure	1.5	bar
Liquid hydrogen temperature	21.6	K
Outlet fraction of para-H_2	≥ 95	mol %
Adiabatic efficiency of compressors	82–85	%
Isentropic efficiency of expanders	85	%
Minimum temperature approach of heat exchangers	0.5	K
Intercooler temperature	298.15	K

Table 2. Types and cost parameters for each equipment in the hydrogen liquefaction process

Equipment	Type	Cost parameters		
		K_1	K_2	K_3
Main cryogenic heat exchanger	Flat plate	4.6656	-0.1557	0.1547
Precooling heat exchanger	Spiral tube	3.9912	0.0668	0.243
Compressor	Centrifugal	2.2897	1.3604	-0.1027
Expander	Axial gas turbines	2.7051	1.4398	-0.1776

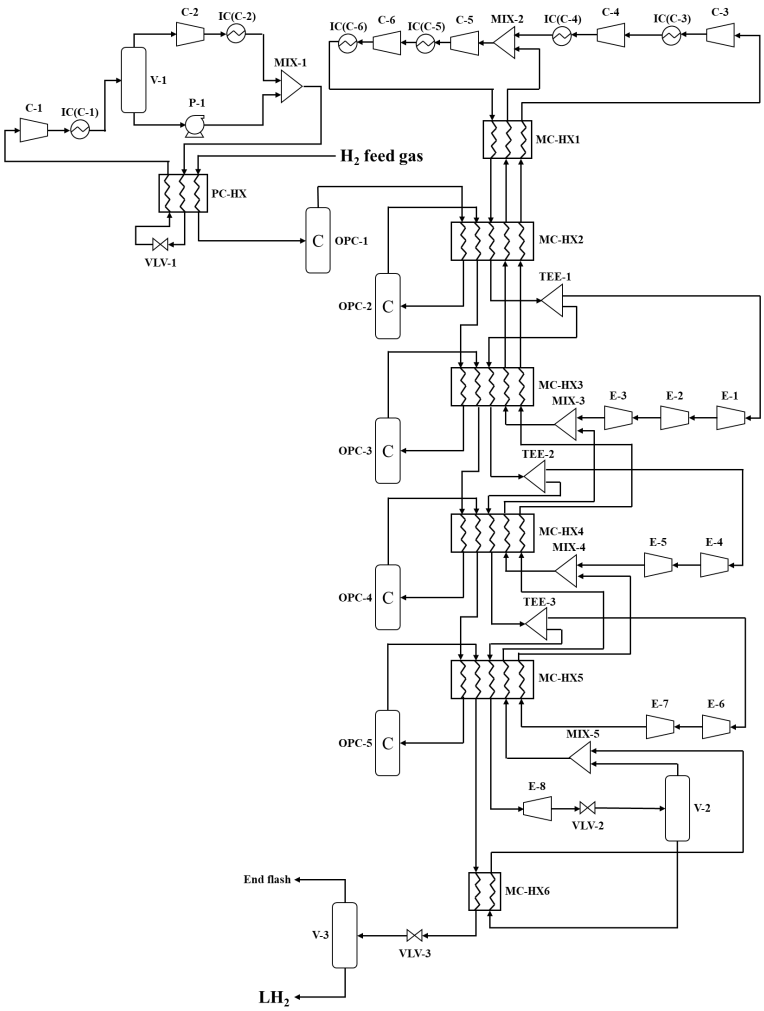

Figure 1. Process flow diagram of the hydrogen liquefaction process

4. Results

The economic analyses of the energy and techno-economic optimization results as well as the base model are shown in Figure 2. Since the hydrogen liquefaction process consumes a lot of energy, the influence of *OPEX* in *TAC* is greater than that of *CAPEX*, and therefore the compressor cost is dominant in the *CAPEX*. However, in the case of energy optimization, the *TAC* is larger compared to the base model and techno-economic optimization because the heat exchanger capacity is excessively increased.

As a result, for the hydrogen liquefaction process, it is advantageous in terms of *TAC* to increase process efficiency and save *OPEX*, but care must be taken not to excessively increase the capacity of the heat exchangers during energy optimization.

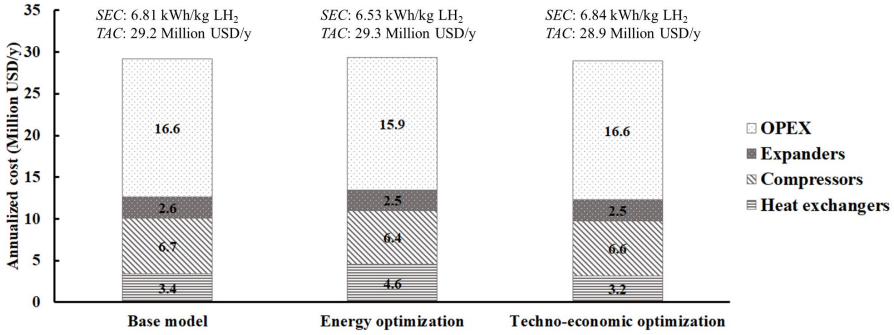

Figure 2. Economic analyses for base model, and energy and techno-economic optimization

5. Discussion

In this study, values for the overall heat transfer coefficient (*U* values) were assumed when estimating the heat exchanger cost in the techno-economic optimization; i.e. *U* value for the main cryogenic heat exchanger was set to 3000 W/m^2·°C, while the *U* value for the precooling heat exchanger was set to 5000 W/m^2·°C. Since these values are taken from natural gas liquefaction process data, future studies are required to apply more appropriate *U* values for the hydrogen liquefaction process. In addition, since the liquid expander (E-8) cost-wise was treated in the same way as the gas expanders, this also needs to be improved in future studies.

6. Conclusions

An economic analysis of a hydrogen liquefaction process was performed based on techno-economic and energy optimization. The total annualized costs were calculated by applying the cost estimation methodology selected for the techno-economic optimization. In conclusion, the influence of *OPEX* on the hydrogen liquefaction process cost is high, and thereby it is important to increase the process efficiency. In addition, if energy optimization is used for the hydrogen liquefaction process design, it should be noted that the heat exchanger capacity can be excessively increased leading to an increase in *TAC*.

References

D. Berstad, G. Skaugen, and Ø. Wilhelmsen, 2021, Dissecting the exergy balance of a hydrogen liquefier: Analysis of a scaled-up claude hydrogen liquefier with mixed refrigerant pre-cooling, International Journal of Hydrogen Energy, 46, 8014–8029.

R. Turton, R. C. Bailie, W. B. Whiting, and J. A. Shaeiwitz, 2008, Cost Equations and Curves for the CAPCOST Program in Analysis, synthesis and design of chemical processes, 3rd ed., London, UK: Pearson Education, 923–954.

L. Yin and Y. Ju, 2020, Process optimization and analysis of a novel hydrogen liquefaction cycle, International Journal of Refrigeration, 110, 219–230.

A. V. Zhuzhgov, O. P. Krivoruchko, L. A. Isupova, O. N. Mart'yanov, and V. N. Parmon, 2018, Low-Temperature Conversion of *ortho*-Hydrogen into Liquid *para*-Hydrogen: Process and Catalysts. Review, Catalysis in Industry, 10, 1, 9–19.