A Novel Cost-effective Silica Membrane-based Process for Helium Extraction from Natural Gas

Homa Hamedi [a], Iftekhar A Karimi[a], cheiak@nus.edu.sg, Truls Gundersen[b], truls.gundersen@ntnu.no

a. Department of Chemical and Biomolecular Engineering, National University of Singapore (NUS). Address: 4 Engineering Drive 4, Singapore 117585.

b. Department of Energy and Process Engineering, Norwegian University of Science and Technology (NTNU). Address: Kolbjorn Hejes v. 1A, NO-7491, Trondheim, Norway.

Abstract

Natural gas reserves with 0.3-2 mol% helium are considered as the only viable source for this noble gas. Currently, cryogenic separation is used to extract helium, but it is energy-intensive. While membrane-based separation is a promising alternative, it is still not considered economical. Even for an inorganic/silica membrane with relatively high selectivity and permeance, a multi-stage membrane system with inter-stage compression is required, which necessitates high CAPEX and OPEX. This study proposes a novel process to enhance the selectivity and permeance of an inorganic/silica membrane system to eliminate the costly inter-stage compression. A 16-24% reduction in the CAPEX and 23-57% in the OPEX are achievable for a natural gas feed with 3-5 mol% helium. In contrast, for a 2 mol% helium feed, the OPEX increases by 34%. However, a 30% decrease in the capital cost outweighs the OPEX increase to make the new process more profitable.

Key words: helium extraction, gas permeation separation, sweep gas, inorganic membrane, organic membrane

1 Introduction

Helium is the lightest monatomic element in Mendeleev's periodic table. Being the second most abundant element in the universe, it is too light to linger in the earth. The gas is in low supply but high in demand due to its unique properties, such as low boiling point, low density, low solubility, high thermal conductivity and inertness. In fact, helium plays an important role in a wide range of industries and applications, such as MRI scanners, aerospace and aircraft manufacturing, industrial-leak detection systems, electronics and fiber optics fabrication, welding and nuclear research facilities.

Helium does not appear in high concentrations even in its only viable source, which is natural gas (NG) reserves with a typical content of 0.3-2 mol% (any concentration percentage to be mol% hereafter) helium. Due to its lightness and low concentration, helium is extracted after the nitrogen rejection unit where the feed stream contains nitrogen and only 2-5% helium. Helium extraction from a large amount of nitrogen is a challenging and energy-intensive separation.

The recovery of pure helium (>99.99 %) from NG typically requires five processing steps. The first step is the removal of all typical impurities in NG, namely carbon dioxide, hydrogen sulfide, water, and mercury. The second step is natural gas liquids recovery which is followed by the nitrogen rejection unit (NRU) as the third step. A single-column NRU process separates methane from the nitrogen, which may contain as low as 2-5% helium with 2000-2800 kPa pressure. The next step is the helium extraction unit (HeXU), which can be either a cryogenic distillation-based HeXU process (CDBHeXU) or a membrane-based HeXU

(MBHeXU). It recovers helium from the nitrogen-rich stream and produces the upgraded helium with 90% purity. Following the HeXU, the stream undergoes final purification in a catalytic oxidation reactor (COR) and pressure swing adsorption (PSA). The catalytic oxidation removes any trace of hydrogen or hydrocarbons contained in the feed. For this purpose, a small amount of air (slightly higher than the stoichiometric requirement) is injected into upgraded helium prior to the reactor. The combustion causes some amounts of water and CO2. The water is partially knocked out simply by cooling to the ambient temperature, and the remaining vapor-phase moisture is removed in the following PSA. This final adsorption purification eliminates all remaining impurities (except Neon), such as N_2, CO_2, and water, and purify helium to 99.99%, which is called grade-A helium (Agrawal et al. 2003; Rufford et al. 2014). Figure 1 depicts the block flow diagram of the helium production process. It should be noted that the grade-A helium is further liquefied for transportation, which is not shown in the figure. It worth mentioning that the nitrogen collected from the HeXU can be released into the atmosphere or used for enhanced oil/gas recovery (EOR/EGR) or gas-lift programs. For EOR, EGR or gas-lift, nitrogen is needed at very high pressures (>6000 kPa). In this study, the high-pressure nitrogen product is assumed to be a desirable product.

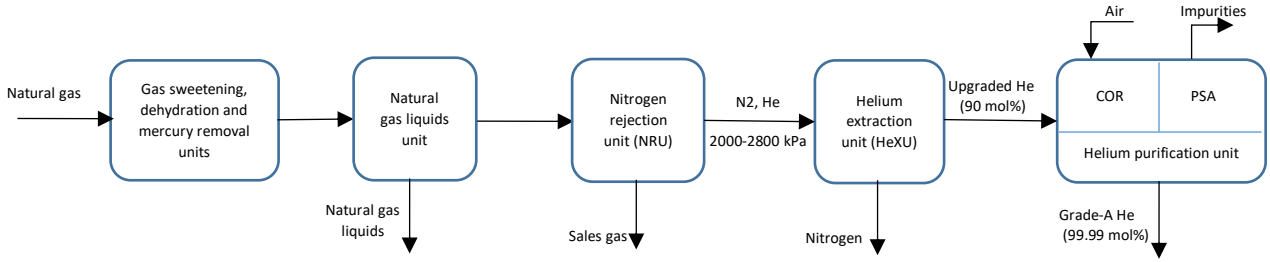

Figure 1. Natural gas processing steps for grade-A helium production

There are several studies investigating the cryogenic method for the HeXU (Alders et al. 2017; Kim and Gundersen 2015; Scholes et al. 2017; Rufford et al. 2014). A few of them compared the CDBHeXU and MBHeXU technologies (Alders et al. 2017; Scholes et al. 2017). Currently, the cryogenic separation is a common technology for an HeXU; however, it is an energy-intensive method, especially when the nitrogen product should be produced at high pressures. The promising prospective approach for this purpose is the membrane technology. Owing to the intensive recent development of membrane science and manufacturing techniques, this permeation-based method exhibits great potential for gas separations. Nevertheless, no membrane-based process has been successfully commercialized for helium recovery application to the best of the authors' knowledge. However, a range of commercial membranes are successfully applied for other gas separations in the natural gas and petrochemical industries, and these show its future potential for the utilization in helium extraction as well. A considerable amount of literature has been published on membrane synthesis and fabrication for the helium and nitrogen separation. Sunarso et al. (2017) and Scholes and Gosh (2017) have comprehensively reviewed both polymeric (organic) and silica (inorganic) membranes for this specific application. Current polymeric membranes have permeance in the range of about 10^{-9}-10^{-7} mol/ (m^2. s. Pa). In contrast, the average permeance range (10^{-8}-10^{-6} mol/ (m^2. s. Pa)) for silica membranes is one order of magnitude larger than that of polymeric membranes (Sunarso et al. 2017). The permeance has an important impact on the total membrane area requirement (or equivalently the membrane module costs) and it increases as gas temperature rises. Inorganic/silica membranes are usually thermal-resistant compared to the polymeric counterparts, which are suitable for near ambient temperatures.

This indicates that inorganic/silica membranes are capable of a better performance at high temperatures. The other important characteristic of membranes is selectivity, which determines product purity, the number of the stages and the costs of the required compression. Silica membranes also have a higher range of selectivities, especially at higher temperatures, compared to the polymeric ones. However, polymeric membrane costs (tens to hundreds of dollars/m^2) is much less than silica membranes (hundreds to thousands of dollars/m^2). Several advantages and disadvantages of the two membranes are mentioned by Lu et al. (2007).

There are also several studies investigating the process design to utilize polymeric membranes in the HeXU (Alders et al. 2017; Scholes et al. 2017; Scholes and Ghosh 2016). A typical two-stage polymeric MBHeXU is illustrated in Figure 2, which is incorporated into a single column NRU. All studies revealed that there is a need for a multi-stage membrane system while assuming the cross-flow pattern and no use of sweeping gas for the membranes. They unanimously concluded that the inter-stage compression (K-202), which has a very high-pressure ratio, accounts for one of the major capital and operating costs in the process. In contrast, the only study which incorporates a silica membrane into a process flowsheet and investigates the entire system is done by Schole (2018). However, the conventional two-stage membrane system was considered in the study without any further modification. Thus, the same aforementioned conclusion of the previous literature was drawn in this study also. In fact, drawing the same conclusion in the latter indicates that even the replacement of the polymeric membranes in Figure 2 with silica counterparts, which have a better selectivity and permeance, cannot improve the helium recovery process. Therefore, any modification in the process design itself might be more advantageous than improvements in membrane characteristics.

This study aims to develop a new design process for the MBHeXU using the silica membrane technology enhanced by the use of a sweeping gas. We utilize compression heat to improve the membrane performance at no additional cost. We evaluate our proposed scheme for different helium concentrations and compare the results with the conventional membrane system (depicted in Figure 2) using Aspen HYSYS simulations.

2 Polymeric MBHeXU Process

A typical MBHeXU integrated with the single-column design NRU is presented in Figure 2. As illustrated, the NRU is aided by a heat-pump cycle to provide the process refrigeration requirement. The column overhead stream (SN-117) contains 2-5% helium (depending on the main feed composition). The MBHeXU cannot be located directly downstream of the NRU column due to the operating temperature requirement of membranes. In fact, the NRU column's overhead stream has a cryogenic temperature which is not feasible for membrane systems. Thus, the feed stream (SN-117) should be heated prior to entering the MBHeXU. Compressor K-201 should be placed prior to Mem-201 to help both the permeation process and the pressure requirement for the nitrogen product.

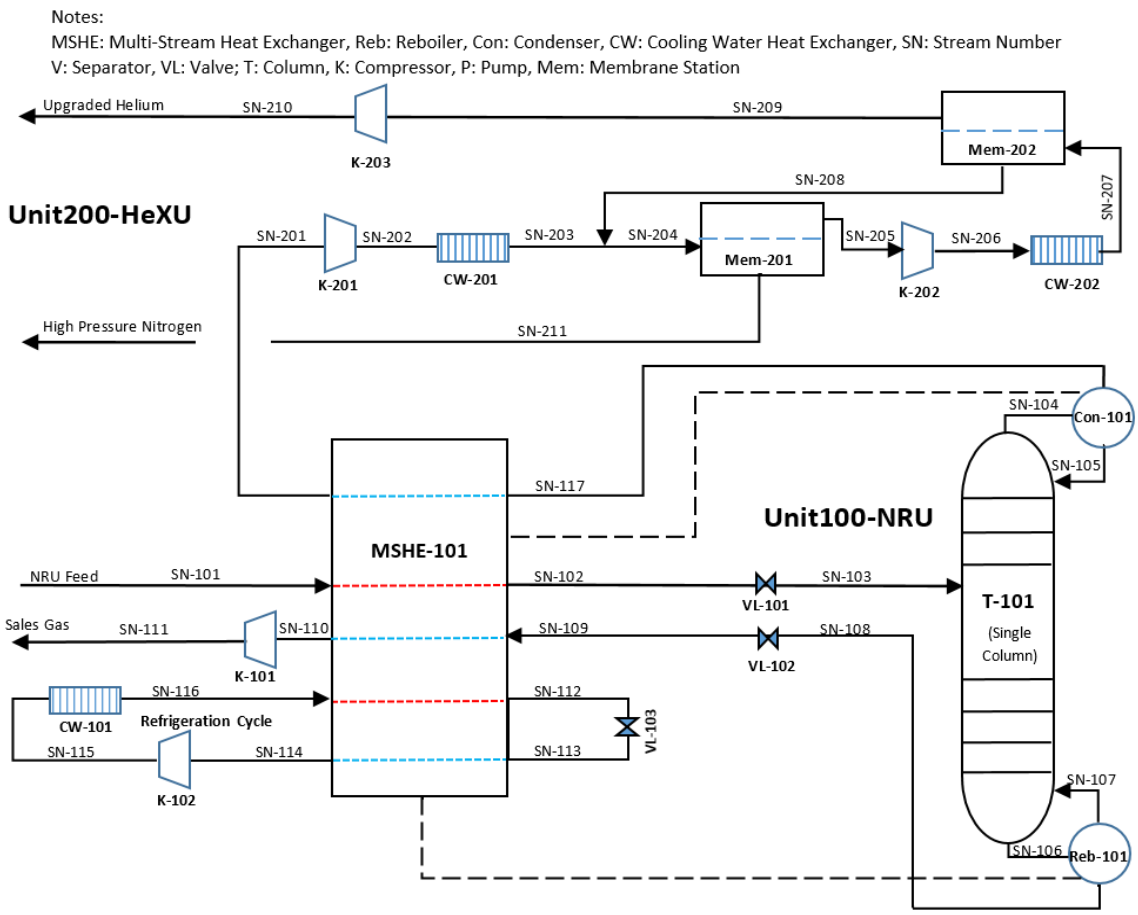

Figure 2. A typical integrated process for the polymeric MBHeXU and NRU

There are three different flow patterns for a membrane module: co-current flow, counter-current flow, and cross flow. Among those, the counter-current flow pattern provides the optimal distribution of driving forces between permeate and retentate sides. Thus, in theory it has the best efficiency; however, manufacturing them is not very practical, especially in large scales (Merkel et al. 2010). This complication can mostly be solved by injecting a sweep gas into the permeate conduit. The sweep gas can also result in a higher driving force and significantly decrease the membrane area. However, the sweep gas decreases the product purity unless it can be easily separated from the product, as it is directly mixed with the permeate stream. Sweep gas has been used for other separations such as N_2/CO_2 or H_2/CO_2 and showed an enhancement in membrane performance (Merkel et al. 2010; Battersby et al. 2009; Chein et al. 2015; Oklany et al. 1998). They employed N_2, air and steam as a sweep gas. For instance, steam is a suitable choice for helium recovery processes because it can easily be condensed at ambient temperature and separated from the upgraded helium. However, steam even at atmospheric pressure requires high operating temperatures, which is not suitable for polymeric membranes. Hence, the counter-current flow pattern (with or without sweep gas) cannot be used for polymeric membrane system. Therefore, the cross-flow pattern, which has the middle performance among the three patterns, can be applied for polymeric membranes. Given their limitation in selectivity and permeance, one single membrane module with the crossflow pattern cannot meet the favorable recovery and purity. For instance, the polymeric membrane chosen (with characteristics and feed conditions in Table 1) for this study can only enhance the purity of a nitrogen stream with 2-5% helium to 20-41%, which is much less than the upgraded helium specification, namely 90%.

Hence, the multi-stage membrane arrangement, as shown in Figure 2, is inevitable. Nevertheless, the inter-stage compression (K-202), especially for a light gas like helium, is considered a major component in both capital and operating expenses.

K-201 and K-202 are one-stage and three-stage centrifugal compressors, respectively. An oil-injected screw compressor was used for K-203.

A model of cross-flow gas permeation, based on a study by Coker et al. (1998), was programmed in Matlab and incorporated into Aspen HYSYS to undertake the desired separation. Vacuum condition is avoided on the permeate side as it requires larger and more complicated equipment, as well as larger membrane area (Gottschlich et al. 1989). Therefore, the permeate pressure can never be less than atmospheric. This model is developed for multicomponent gas separation via hollow-fiber contactors. The model solves governing mass equations under steady-state conditions using the finite difference technique. We assumed the pressure drop negligible for both polymeric and silica membrane processes. All mass-transfer resistance is limited to the total membrane wall. The plug-flow is assumed for both permeate and retentate sides.

For specified membrane properties and permeation pressures, as well as given total recovery, the following relationship exists between the two membrane recoveries.

$$Recovery_{Mem-202} = \frac{1-{}^{1}/_{Recovery_{Mem-201}}}{1-1/Recovery_{total}} \quad \text{where} \quad Recovery_{Mem-201} \geq Recovery_{total} \qquad \text{Eq. (1)}$$

where $Recovery_{total}$, $Recovery_{Mem\text{-}201}$ and $Recovery_{Mem\text{-}202}$ represent the total, the first stage membrane, and the second stage membrane helium recovery, respectively (Figure 2).

3 Silica MBHeXU Process

Inorganic/silica membrane platforms are often known for having simultaneously high selectivity (due to molecular sieving) and permeance, long term durability, high thermal stability and structural stability. Due to high thermal stability, the membranes can even offer higher selectivity and permeance at high temperatures. Thus, even a single-stage crossflow silica membrane (with characteristics and feed conditions in Table 1) can increase the purity of 2-5% helium to 37-69%. Although the final purities should still be elevated to meet the upgraded helium specification, they are 70-86% higher than the purities achieved by the single-stage polymeric counterpart, 20-41%.

One approach to meet the upgraded-helium purity requirement (90%) and still avoid the costly multi-stage membrane arrangement is utilization of sweep gas. Considering the sweep gas should be easily separated from the upgraded helium using a cheap utility like cooling water, the operating temperature of the membrane must be sufficiently above ambient. One of the best candidates for sweep gas is superheated steam at atmospheric pressure (101.3 kPa) and temperature of 150-160°C. Superheated steam is chosen to avoid any liquid formation inside the permeate side, where the sweep gas is to be injected. Steam is cheap and available in most plants. Most importantly, the small trace of vapor-phase moisture remaining in the upgraded helium after steam condensation can be removed in the downstream facilities of the final purification step (Figure 1), where the PSA column is already devised for the same purpose (as mentioned earlier in Section 1). In fact, using steam as sweep gas offers the following advantages:

- Eliminates the need for inter-stage compression
- Significantly decreases the membrane area

- Steam is cheap and available in most plants
- Remaining traces of impurities can be removed in the available downstream PSA facilities

Figure 3 shows the new process design for a silica MBHeXU. The upstream NRU is not shown in the figure as no modifications are done in this unit. One single-stage silica membrane (Mem-201) performs the separation, which is equipped with superheated steam (SN-209) as the sweep gas on the permeate side. The one-stage compressor (K-201) with a pressure ratio of about 3 is placed before the membrane module to fulfill the nitrogen product pressure requirement and help the permeation process. For the same reason, the compressor after-cooler (CW-201) is postponed to after the membrane separation in order to take advantage of higher selectivity and permeance of the silica membrane at higher temperatures. In fact, the generated heat during the compression is used to enhance the subsequent separation in Mem-201. SN-203, which contains helium, nitrogen and water vapor, is cooled in CW-201, which liquefies the water. Helium has no solubility in the liquid phase of SN-206 at 25 °C and atmospheric pressure, hence there is no loss of helium. After the phase separation in V-201, the upgraded helium is compressed in K-203 and transferred to the final purification facilities for further treatment (which is not shown in this figure).

A model of the counter-current gas permeation with sweep gas, based on a study by Coker et al. (1998), was programmed in Matlab and incorporated into Aspen HYSYS to undertake the desired separation. This model has shown a good agreement with experimental data (Hoorfar et al. 2018). Vacuum condition is also avoided on the permeate side. The arrangement of compressors K-201 and K-203 is the same as for the polymeric MBHeXU.

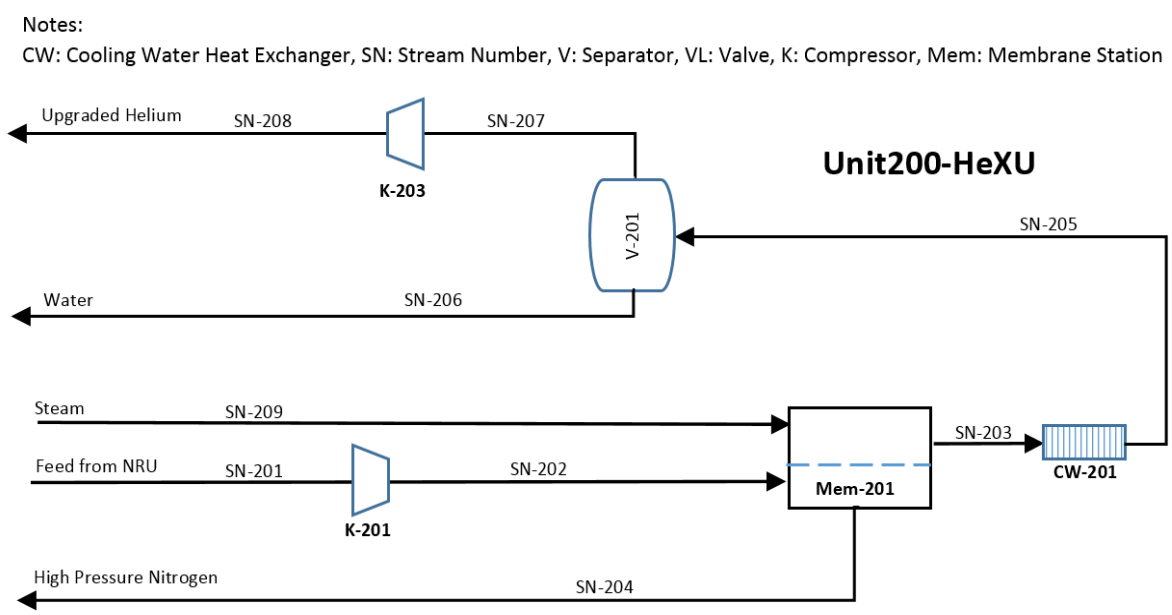

Figure 3. A typical integrated process for the Silica MBHeXU and NRU

4 Design Data and Specifications

Table 1 shows the specifications and design data used in this study. Various helium mole fractions of 2, 3, 4 and 5% are considered in the inlet feed gas (SN-201 in Figures 2 and 3). There are various polymeric and

silica membranes which are suitable for the current separation and feed conditions (Sunarso et al. 2017; Scholes and Ghosh 2017). In order to compare the two systems, Hyflon AD 60X - G200 (Macchione et al. 2007) and Co-doped silica (Uhlmann et al. 2009) were chosen for the polymeric and the silica membrane systems respectively.

Table 1. Design data and specifications

Design specification	Value
Feed flowrate, mole/s	277.78
Feed pressure, kPa	2200
Feed temperature, °C	298.15
Compressor adiabatic efficiency	0.75
Motor efficiency	0.85
Helium recovery rate, mol%	90
Upgraded helium purity, mol%	90
Helium product pressure, kPa	3000
Nitrogen product pressure, kPa	6000
Polymeric membrane selectivity (He/N_2)	50.3
Polymeric membrane permeance	6×10^{-9}
Silica membrane selectivity (He/N_2) @ 150°C	360
Silica membrane permeance @ 150°C	6×10^{-8}
Cooling water temperature, °C	293.15

5 Performance Evaluation

The performance of polymeric and silica MBHeXUs for different helium percentages in a nitrogen-rich stream is shown in Tables 2 and 3 respectively.

The first three columns of Table 2 show the power consumption required for each compressor at different He contents. It is obvious that helium consumes more energy for a unit of compression compared to nitrogen. Thus, the power consumption of the three compressors is expected to increase as the helium content increases, except the inter-stage compression (K-202). This compression needs higher power when the helium content is 2%. This is because the compressor is also responsible for pressurizing the recycle stream (SN-208), which increases as helium decreases. According to the table, the inter-stage-compression (K-202) accounts for 30-32% of the total power consumption. This amount of work, together with the associated capital cost, is avoided in the silica MBHeXU. The required membrane area monotonically increases as helium content decreases due to the difficulty of the separation. The last two columns show the recovery of the two membranes (Mem-201 and Mem-202) with a total helium recovery of 90 mol%.

Table 3 shows the results for the silica MBHeXU. As expected, the power consumptions of the K-201 and K-203 compressors are the same as those of the polymeric MBHeXU. According to the table, the required area significantly decreases in the new design. This is because of the sweep gas utilization, which leads to higher driving forces between the feed and permeate sides, and the high selectivity and permeance for the silica membrane. However, as mentioned earlier, the cost of silica membranes per unit is much higher than that of polymeric membranes. Thus, there is a trade-off between them and an economic analysis is required. As opposed to the polymeric MBHeXU results, the membrane area gradually decreases as the helium content declines. This is due to the sweep gas impact on the membrane area. For 4% helium, the need for sweep gas is at the lowest (18 mole/s), but the membrane area requirement is at the highest (1995 m^2). It worth mentioning that here the sweep gas is adjusted to meet both recovery and purity requirements of the process and the area is the output.

Table 2. Recovery and power consumption of the two-stage polymeric MBHeXU

Helium content (mol%)	K-201 power consumption (kW)	K-202 power consumption (kW)	K-203 power consumption (kW)	Total Membrane Area (m^2)	Mem-201 Recovery (mol%)	Mem-202 Recovery (mol%)
5	1072	546	197	74487	0.904	0.923
4	1071	527	156	77158	0.908	0.912
3	1070.5	525	117	82053	0.917	0.815
2	1070	560	78	92539	0.936	0.851

Table 3. Recovery and power consumption of the single-stage silica MBHeXU with sweep gas

Helium content (mol%)	K-201 power consumption (kW)	K-203 power consumption (kW)	Sweep gas flowrate (mole/s)	Total Membrane Area (m^2)	Mem-201 Recovery (mol%)
5	1072	197	22.5	1910	0.90
4	1071	156	18.0	1995	0.90
3	1070.5	117	39.5	1875	0.90
2	1070	78	73.7	1837.3	0.90

6 Economic Analysis

The capital and operating costs of the compressors K-201 and K-203 are equal for the two polymeric and silica MBHeXU processes and can be canceled in the current economic comparison. The cooling water requirement is also assumed cheap compared to the other operating costs. The Aspen HYSYS Economic Evaluation package was used to evaluate the equipment cost. The membrane module and framework costs are calculated based on Eq. 2 (Van Der Sluijs et al. 1992).

$$Membrane\ Capital\ Cost = CC_{mm} + CC_{mf} = A_m C_m + \left(\frac{A_m}{2000}\right)^{0.7} C_{mf} \qquad \text{Eq. (2)}$$

where CC_{mm} and CC_{mf} are the capital cost of the membrane module and its frame respectively. A_m, C_m and C_{mf} are membrane area (m^2), membrane module price per unit ($/$m^2$) and membrane frame price (M$). C_m is assumed to be 50 $/$m^2$ and 3000 $/$m^2$ for polymeric and silica membranes respectively. C_{mf} is considered to be 0.238 M$ (Van Der Sluijs et al. 1992). It should be noted that 3000 $/$m^2$ is the highest price reported for inorganic/silica membranes in the literature. In fact, this highest price gives more conservative results for the comparison.

Compressors are to be powered by electricity. The electricity and low-pressure steam prices are considered to be 70 $/MWh and 13 $/1000kg, respectively. Steam price is taken as 150% of the price given by the U.S. Department of Energy (The URL address is available in Reference). The 50% overcharge is used for conservative results.

Table 4 shows the cost components of the two processes. The results show that the silica membrane module (with the highest price assumption of 3000$/$m^2$) costs more than the polymeric counterparts, with 4% helium case having a 54.9% increase and 2% helium a 19% increase. However, the final capital cost (CAPEX) of the silica membrane is much less than the polymeric system. This is due to the elimination of the inter-stage compressor (K-202) in the silica MBHeXU. The percentage CAPEX reduction varies between 16.0 % and 29.8%. There is also a significant opportunity for OPEX savings in silica MBHeXU for different helium contents, except for 2% helium with a penalty of 0.14 million US dollars (MUSD)/year.

This is because of the highest amount of steam required for the separation. However, for the same case, 2.38 MUSD can be saved in CAPEX. This indicates that even for a project with a 10-year lifetime and a zero discount rate, there is still a saving of 0.98 MUSD. Thus, the developed silica MBHeXU process outperforms the polymeric MBHeXU. It worth mentioning that the steam used as sweep gas is assumed to be out-sourced low-pressure steam, which is typically at 500 kPa. However, the steam required for the sweep gas needs to be at atmospheric pressure. The steam with this specification can even be provided utilizing waste heat in the plant and the condensed water (SN-206 in Figure 3). An example of such waste heat is the heat generated by the NRU compressors (K-102 and K-101) in Figure 2. In this case, the OPEX for the silica MBHeXU process (Table 4) even decreases to zero.

Table 4. Operating and capital expenditures for the polymeric and silca MBHeXU processes

	Polymeric MBHeXU			Silica MBHeXU		
Helium content (mol%)	OPEX (MUSD/year)	CAPEX (MUSD)	Membrane cost (MUSD)	OPEX (MUSD/year)	CAPEX (MUSD)	Membrane cost (MUSD)
5	0.39	7.16	3.72	0.17	5.83	5.73
4	0.38	7.25	3.86	0.13	6.08	5.98
3	0.38	7.49	4.10	0.29	5.72	5.62
2	0.40	7.99	4.63	0.54	5.61	5.51

7 Conclusion

A novel and economically attractive silica-based membrane process for recovering helium from natural gas is proposed. A sweep gas and compression heat are used to enhance the selectivity and permeance of the membrane. The new process eliminates inter-stage compression completely and reduces both operating and capital costs. There is an opportunity for a 16-30% reduction in the capital cost compared to the available polymeric membrane systems even for a high silica membrane price of 3000\$/m^2. The annual operating costs can be decreased by 23-57% for 3-5% helium contents. There is a penalty of 34% (0.14 MUSD) in the annual operating cost of the new system when the feed contains 2% helium; however, due to a 30% decrease (equivalent to 2.38 MUSD) in capital cost, the process still remains profitable compared to the polymeric membrane systems. The overall profit can obviously be improved if waste heat of the plant is utilized to produce superheated steam at 101.3 kPa instead of using an out-sourced utility. A smaller footprint due to the inter-stage compression elimination is another advantage of this novel process.

8 Acknowledgements

Homa Hamedimastanabad acknowledges the financial support under the SINGA scholarship. The work was also funded in part by the National University of Singapore through a seed grant (R261–508 -001–646/733) for CENGas (Center of Excellence for Natural Gas).

9 Nomenclature

CAPEX= capital expenditure

CDBHeXU= cryogenic distillation-based HeXU

CW= cooling water heat exchanger in Figures 2 and 3

EGR= enhanced gas recovery

EOR= enhanced oil recovery

HeXU= helium extraction unit

K= compressor in Figures 2 and 3

MBHeXU= membrane-based HeXU

Mem= membrane station in Figures 2 and 3

MSHE= multi-stream heat exchanger in Figure 2

NG= natural gas

NRU= nitrogen rejection unit

OPEX= operating expenditure

PSA= pressure swing adsorption

SN= stream number in Figures 2 and 3

V= phase separator in Figure 3

VL= valve in Figures 2 and 3

10 References

Agrawal, R., Herron, D.M., Rowles, H.C., Kinard, G.E., 2003. Kirk-Othmer Encyclopedia of Chemical Technology. In, 19-22. Hoboken, NJ: John Wiley & Sons.

Alders, M., Winterhalder, D., Wessling, M., 2017. Helium recovery using membrane processes, *Separation and Purification Technology*, 189: 433-40. https://doi.org/10.1016/j.seppur.2017.07.084

Battersby, S., Tasaki, T., Smart, S., Ladewig, B., Liu, S., Duke, M. C., Rudolph, V., Diniz da Costa, J. C., 2009. Performance of cobalt silica membranes in gas mixture separation, *Journal of Membrane Science*, 329: 91-98. https://doi.org/10.1016/j.memsci.2008.12.051

Chein, R. Y., Chen, Y. C., Chung, J. N., 2015. Sweep gas flow effect on membrane reactor performance for hydrogen production from high-temperature water-gas shift reaction, *Journal of Membrane Science*, 475: 193-203. https://doi.org/10.1016/j.memsci.2014.09.046

Coker, D. T., Freeman, B. D., Fleming, G. K., 1998. Modeling multicomponent gas separation using hollow-fiber membrane contactors, *AIChE Journal*, 44: 1289-300.

Gottschlich, D. E., Roberts, D. L.,Wijmans, J. G., Bell, C. M., Baker, R. W., 1989. Economic comparison of several membrane configurations for H2/N2 separation, *Gas Separation and Purification*, 3: 170-79. https://doi.org/10.1016/0950-4214(89)80002-7

Hoorfar, M., Alcheikhhamdon, Y., Chen, B., 2018. A novel tool for the modeling, simulation and costing of membrane based gas separation processes using Aspen HYSYS: Optimization of the CO2/CH4 separation process, *Computers and Chemical Engineering*, 117: 11-24. https://doi.org/10.1016/j.compchemeng.2018.05.013

Kim, D., Gundersen, T., 2015. Helium extraction from LNG end-flash, *Chemical Engineering Transactions*, 45: 595-600. https://doi.org/10.3303/CET1545100

Lu, G. Q., Diniz da Costa, J. C., Duke, M., Giessler, S., Socolow, R., Williams, R. H., Kreutz, T., 2007. Inorganic membranes for hydrogen production and purification: A critical review and perspective, *Journal of Colloid and Interface Science*, 314: 589-603. https://doi.org/10.1016/j.jcis.2007.05.067

Macchione, M., Jansen, J. C., De Luca, G., Tocci, E., Longeri, M., Drioli, E., 2007. Experimental analysis and simulation of the gas transport in dense Hyflon®AD60X membranes: Influence of residual solvent, *Polymer*, 48: 2619-35. https://doi.org/10.1016/j.polymer.2007.02.068

Merkel, T. C., Lin, H., Wei, X., Baker, R., 2010. Power plant post-combustion carbon dioxide capture: An opportunity for membranes, *Journal of Membrane Science*, 359: 126-39. https://doi.org/10.1016/j.memsci.2009.10.041

Oklany, J. S., Hou, K., Hughes, R., 1998. A simulative comparison of dense and microporous membrane reactors for the steam reforming of methane, *Applied Catalysis A: General*, 170: 13-22. https://doi.org/10.1016/S0926-860X(98)00027-1

Rufford, T. E., Chan, K. I., Huang, S. H., May, E. F., 2014. A review of conventional and emerging process technologies for the recovery of helium from natural gas, *Adsorption Science and Technology*, 32: 49-72. https://doi.org/10.1260/0263-6174.32.1.49

Scholes, C. A., 2018. Helium recovery through inorganic membranes incorporated with a nitrogen rejection unit, *Industrial and Engineering Chemistry Research*, 57: 3792-99. https://doi.org/10.1021/acs.iecr.8b00314

Scholes, C. A., Ghosh, U., 2016. Helium separation through polymeric membranes: selectivity targets, *Journal of Membrane Science*, 520: 221-30. https://doi.org/10.1016/j.memsci.2016.07.064

Scholes, C. A., Ghosh, U. K., 2017. Review of membranes for helium separation and purification, *Membranes*, 7, 9. https://doi.org/10.3390/membranes7010009

Scholes, C. A., Gosh, U. K., Ho, M. T., 2017. The economics of helium separation and purification by gas separation membranes, *Industrial and Engineering Chemistry Research*, 56: 5014-20. https://doi.org/10.1021/acs.iecr.7b00976

Sunarso, J., Hashim, S. S., Lin, Y. S., Liu, S. M., 2017. Membranes for helium recovery: An overview on the context, materials and future directions', *Separation and Purification Technology*, 176: 335-83. https://doi.org/10.1016/j.seppur.2016.12.020

Uhlmann, D., Liu, S., Ladewig, B. P., Diniz da Costa, J.C., 2009. Cobalt-doped silica membranes for gas separation, *Journal of Membrane Science*, 326: 316-21. https://doi.org/10.1016/j.memsci.2008.10.015

U.S. Department of Energy, 2014. How to Calculate the True Cost of Steam, https://www.energy.gov/sites/prod/files/2014/05/f15/tech_brief_true_cost.pdf

Van Der Sluijs, J. P., Hendriks, C. A., Blok, K., 1992. Feasibility of polymer membranes for carbon dioxide recovery from flue gases, *Energy Conversion and Management*, 33: 429-36. https://doi.org/10.1016/0196-8904(92)90040-4