NTNU
Innovation and Creativity

Design of an Electric X-mas Tree Gate Valve Actuator

Einar H. Winther-Larssen

Master of Science in Engineering Cybernetics
Submission date: June 2007
Supervisor: Ole Morten Aamo, ITK
Co-supervisor: Voula Terzoudi, Aker Kværner Subsea Lysaker Oslo
Alan McGovern, Aker Kværner Subsea Lysaker Oslo

Norwegian University of Science and Technology
Department of Engineering Cybernetics

Problem Description

The world population is rapidly becoming very aware of the impact that modern living is having on the environment and as a result there are increasing pressures on regulatory bodies to adopt "zero emissions" policies. The recovery of subsea hydrocarbons from offshore wells is not as efficient as onshore. In order to improve this situation, operators are deploying a variety of electrically power hungry equipment such as subsea separators, compressors and pumps etc, and are demanding an ever increasing amount of sophisticated instrumentation to better manage the reservoir and associated equipment. Also, as this new technology becomes available, hydrocarbons can be recovered economically from greater depths and at longer offsets from existing infrastructure. Traditionally the larger power consumers in subsea developments have been fed by hydraulics with lower power requirements. However, greater depths and longer offsets are raising design problems for Xmas tree hydraulic actuators and accumulators. This has resulted in the consideration of an electrical solution.

This diploma will review appropriate motor technologies for an electric actuator to be used on a all electric subsea x-mas tree gate valve. The focus on the electrical part is finding a type of electrical machine that would fit with the size requirements and the mechanical requirements that were given and estimate the sizes of the motors. The second part was to construct a motor driver control layout that can be used on a x-mas tree.

This diploma is one of two given by Aker Kvaerner Subsea Controls.
GOAL: Design an electric actuator to be used on a standardised Aker Kvaerner x-mas tree gate valve with special focus on the electrical aspects.

To reach the overall goal the following objectives had to be accomplished:

1. Make a functional design specification for an electric x-mas tree actuator. Come up with different options for actuator designs that conform to the specification.
2. Evaluate different electric motor technologies for use in an electric x-mas tree actuator. A consideration of the selection criteria will be the ability of the motor to run flooded with sea water.
3. Decide on a motor that fits with the functional design specification and the size limitations for the actuator. Estimate sizes of the motors for the different designs.
4. Describe technologies available to control the actuator system.
 - Power electronics
 - Converters
 - Packaging
5. Develop the layout for a future motor driver control system for usage on an all electric X-mas tree.

Assignment given: 20. January 2007

Preface

This Master's thesis is the final written work of my study at Department of Engineering Cybernetics, The Norwegian University of Science and Technology in Trondheim (NTNU).

I want to express my deepest thanks to Aker Kvaerner Subsea (AKS) and my supervisors Alan McGovern, Voula Terzuodi and Svein Nesje for giving me this opportunity. Their help and support has been exceptional. I would also thank my supervisor at NTNU, Professor Ole Morten Aamo, for help and advice during my work.

Last but not least I will thank the Controls group at AKS, especially Jon Lund-Larsen, for the support, the fantastic coffee and for keeping up with me during this period.

Einar H. Winther-Larssen, Trondheim, 15.06.07

Abstract

The increasing need for more energy in the world is making the oil companies search for hydrocarbons in deeper water and with longer distances between the well and platform (step-out) never experienced before. Current systems are designed to operate in deepwater with relatively short step-outs. Since the search now is starting to exceed this, the operational conditions are changed and the electro-hydraulic system is closing in on its operational limits. Hence, the increasing need for a system that supports the long step-outs and the deeper water. Aker Kvaerner has started looking into the development for an All Electric Subsea Production system.

In co-operation with Aker Kvaerner Subsea, a functional design specification for an electric subsea gate valve actuator has been developed and included in this thesis. This functional design specification will include all the requirements that a subsea electric actuator must conform to. This includes the operational requirements, size limitations, failsafe needs etc. Based on this specification, a design for a electric actuator and including motor driver control system layout on the all electric x-mas tree is proposed as a part of the All Electric Subsea Production system. The actuator will be used to operate the gate valves on a x-mas tree which controls the flow of hydrocarbons through the valves into the pipelines.

Most of the existing subsea gate valve actuators are currently using hydraulic oil to operate the valves linearly. Here a concept is being suggested in replacement of the hydraulic fluid, while still complying with the necessary design specification. A number of electrical machines for potential use in this application are presented and evaluated. A Permanent Magnet Synchronous Machine is being investigated further. These machines can be custom made, and can also be made with built in redundancy. Calculation of size for the Permanent Magnet Synchronous Machine has been done, to determine suitability within the space limitation of the apparatus.

Two layouts for controlling the actuators on the all electric x-mas tree are proposed. These two are also evaluated against the standards made for subsea production systems and the no 'single point failure' requirement made by the industry. The chosen solution proposed for controlling the electrical actuators is an integrated design, where all actuators have their own motor driver inside.

This thesis conclude that an electrical actuator will be technically and mechanically possible to build (from an electrical perspective), using the design and control layout proposed.

Contents

List of Figures

List of Tables

Abbreviations

AC ..... Alternating Current
AD ..... Analogue to Digital
AFPM ..... Axial Flux Permanent Magnet
AMV ..... Annulus Master Valve
API ..... American Petroleum Institute
ASME ..... American Society Of Mechanical Engineers
AWV ..... Annulus Wing Valve
BS ..... British Standard
BT ..... Bipolar transistors
DC ..... Direct Current
DSP ..... Digital Signal Processors
EPU ..... Electrical Power Unit
FDS ..... Functional Design Specification
FPGA ..... Field Programmable Arrays
FPSO ..... Floating Production, Storage and Offloading vessel
GTO ..... Gatet turn-off thyristors
HPU ..... Hydraulic Power Unit
IEC ..... The International Electrotechnical Commission
IGBT ..... Insulated gate bipolar transistors
IM ..... Induction Machines
ISO ..... International Organization for Standardization
IWIS ..... The Intelligent Well Interface Standardisation
LVDT ..... Linear Variable Differential Transformer
MCU ..... Master Control Station
MOSFET .... MOS field effected transistors
NdFeB ..... neodymium-iron-boron
PM ..... Permanent Magnet
PMDC ..... Permanent Magnet Direct Current
PMSM ..... Permanent Magnet Synchronous Machines
PMV ..... Production Master Valve
PSU ..... Power System Unit
PWM ..... Pulse Width Modulation
PWV ..... Production Wing Valve

ROV ..... Remotely Operated Vehicle
SCSSV ..... Surface Controlled Subsurface Safety Valve
SSC ..... Solid State Converter
W ..... Watt
WOV ..... Workover Valve
XOV ..... Crossover Valve

Symbols

A_v	Pressure acting area
A_p	Actuator piston area
A_{os}	Override stem area
A_{vs}	Valve stem area
F_{bp}	Bore pressure
F_{frs}	Static friction force
F_{frd}	Dynamic friction force
F_{cp}	Cavity pressure
F_{co}	Net required force to crack open with full pressure in bore at surface
V_f	Valve force
S_p	Spring preload(valve closed)
F_{cp}	Cavity pressure at actuator stem
S_{pf}	Seal packing friction(assumed),
F_{frs}	Static friction force
S_c	Spring constant
1in	one inch, 2.54cm
T	torque
D	diameter
L	the length of the machine
P	Power
v	rotational speed.
k	a dimensioning factor given from experience
ω	Machines rotational speed

Chapter 1

Introduction

The search for hydrocarbons is now being performed in deeper water and with longer step-outs than ever before. This is a result of the need to recover hydrocarbons to support the increasing world demands for energy. Equipment on the sea floor needs to be controlled and monitored and most of today's systems are multiplexed electro-hydraulic systems, designed in the mid 80's. These systems are designed to operate in deepwater with relative short step-outs (in subsea terminology deepwater is defined as water depths from 300-1500 meters). Since the search now is starting to exceed 1500 meters, defined as ultra deep water, the operational conditions have changed (higher pressure, harder to maintain etc.) and the electro-hydraulic system is approaching its operational limits. Another challenge with today's systems when going ultra deep and with far step outs is the use of hydraulic oil. When going ultra deep, the umbilical for transporting hydraulic oil becomes very expensive to build and also, the infrastructure that the hydraulics needs, gets harder to build. Also, a problem with hydraulic oil is the strict environmental regulations that control its use

To keep control of the flow of hydrocarbons from the reservoir through the pipelines the regulatory authorities require two barriers that can stop the flow. The first is the down hole safety system which is located inside the bore above the reservoir. This is the first barrier that is used on a subsea field for stopping the hydrocarbons from the seawater. The second barrier is the x-mas tree, which is located on the sea bed. The X-mas tree controls the flow of hydrocarbons through multiple control valves and chokes to the receiving unit which can be a Floating Production, Storage and Offloading vessel (FPSO) or a platform. Most of the valves used in these two blocks are today controlled by hydraulic actuators with a mechanical failsafe mechanism (springs) and a Remotely Operated Vehicle (ROV) override. The challenge that these hydraulic actuators experience when going to ultra deep water is the high pressure. The pressure to operate the valve must be higher and the spring that is used for the failsafe operation gets bigger. The problem with bigger equipment is

that it needs bigger vessels to deploy it. This can be very costly. An illustration over a subsea system is given in figure 1.1.

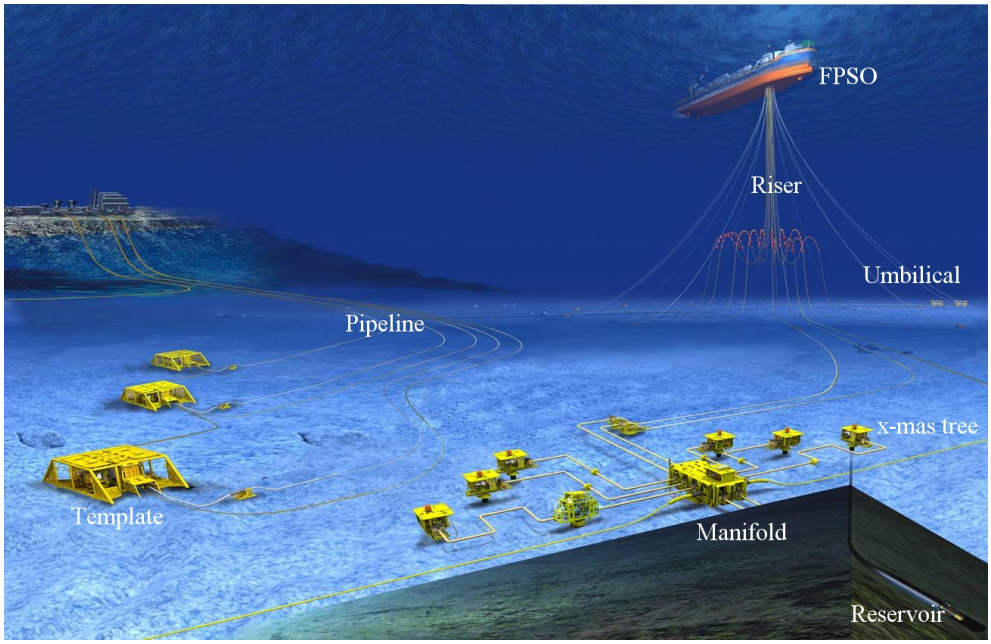

Figure 1.1: Subsea system

To get a system that can be deployed in ultra deep water, where the constraints are harder, a new type of subsea system must be designed. Ideally this system should have no hydraulics. The only way of eliminating or reducing the usage of hydraulic oil is to redesign the components that are in operation to use other types of energy.

This thesis is one of two that has started the design of an electric actuator that can operate an Aker Kvaerner Subsea Gate Valve with special focus on the electrical aspects, motors, motor drivers, and x-mas tree control system.

1.1 Background

Aker Kvaerner is a supplier of subsea equipment to companies like Shell, Statoil/Hydro, BP and others. Aker Kvaerner initiated a study for two students to look at the possibilities for building an all electric x-mas tree gate valve actuator. The actuator should conform to the standards and guidelines that the subsea industry is using. This is a new initiative for Aker Kvaerner and is a part of the development for an All Electric Subsea Production system.

The first part of both projects was to develop a Functional Design Specification (FDS) for the all electric actuator in conjunction with Aker Kvaerner Valves and

Actuator group. After this the two projects were divided into a mechanical and an electrical part respectively. The focus in the mechanical part was gearing solutions, rotational to linear movement and material science. The focus on the electrical part was finding a type of electrical machine that would fit with the size requirements and the mechanical requirements that were given. Calculation of the size of the machine to determine suitability within the space limitation of the apparatus was performed. The second part was to construct a motor driver control layout used on an all electric x-mas tree. The projects are two standalone projects but cross-references are made where applicable.

1.2 Objective

GOAL: Design an electric actuator to be used on a standardised Aker Kvaerner x-mas tree gate valve with special focus on the electrical aspects.

To reach the overall goal the following objectives had to be accomplished:

1. Make a functional design specification for an electric x-mas tree actuator. Come up with different options for actuator designs that conform to the specification.
2. Evaluate different electric motor technologies for use in an electric x-mas tree actuator. A consideration of the selection criteria will be the ability of the motor to run flooded with sea water.
3. Decide on a motor that fits with the functional design specification and the size limitations for the actuator. Estimate sizes of the motors for the different designs.
4. Describe technologies available to control the actuator system.
   - Power electronics
   - Converters
   - Packaging
5. Develop the layout for a future motor driver control system for usage on an all electric X-mas tree.

1.3 Limitations

This thesis has looked at electric motors and motor drives for a x-mas tree actuator. Some limitations have been made and these are as follows;

- It will not include calculations of the mechanical solutions that has been investigated this has been done in [1]. A summery of this is given.
- This thesis has just focused on the replaceable actuator. The mechanical structure and the failsafe solutions which are a part of the barrier have not been considered in any detail.
- Only the technical aspects of running the motor flooded with sea water have been considered. Aspects around marine growth, fouling, corrosion, hydraulic operating fluid and, if exposed, the well stream fluid or other issues that follow with this have has not been considered.
- This thesis has considered the design from a system perspective. No detail design of any components in the system has been carried out.
- The pressure and temperature sensors for monitoring, downhole equipment for monitoring and control, and future equipment was not considered in the motor driver control layouts.

1.4 Outline of the thesis

Chapter two gives an overview of subsea systems and the subsea environment. It starts by going through the most important standards that are used for subsea equipment and design of subsea equipment. The next section in this chapter looks at the environment the equipment will experience at 3000 meters and also what must be considered when designing equipment in this type of environment. The last sections of chapter two describes the existing subsea system and parts in this system - this includes the x-mas tree, the gate valves and the actuators. In this section packaging of electrical systems subsea is also mentioned. It will also give a short introduction of how a future system will look and describe the positive aspects with this system.

Chapter three gives the requirements that are used in this thesis; the rest of the FDS is enclosed in appendix D. The FDS has been generated in co-operation with the co-student that is looking into the mechanical parts of the actuator and Aker Kvaerner Valves and Actuator group which is a part of Aker Kvaerner Subsea.

Chapter four will show the two different designs that have been made after considering the limitations and the FDS made in chapter three. The last part of this chapter will go through the mechanical solutions of the actuator system, screw types and gears. This thesis has been looking at two gears and three screw type options. Section 4.1.2 summarizes some of the conclusions that have been made by the co-student in [1]. References are made where applicable.

Chapter five starts going through different types of electrical machine technologies that can be used in the all electric actuator designs proposed in chapter four. The

section ends with a recommendation of a motor technology that can be used in the design. The next section estimates the sizes for the motors. Different solutions of the motor sizes will be given depending on what type of design that is chosen, what type of screw that is used in the chosen design and also how redundant the system should be. The last section in this chapter gives a recommendation of a design with motors conforming to the specifications given in chapter three.

Chapter six gives a solution of how a layout for a motor driver control system on a x-mas tree will look. The first section gives an overview of technologies that are used to control the motors from chapter five. The second section in this chapter shows two different types of layouts that can be used on a x-mas tree using electrical actuators. The chapter ends with a proposal for a layout. This layout will be evaluated against the subsea standards and requirements.

Chapter seven is given the recommended solution and conclusion for this thesis.

Chapter 2

Subsea systems and environment

2.1 Standards

To ensure reliable and safe operation of subsea systems, the design, operation, testing etc., are regulated by industrial, national and international standards. These standards are from organizations like the International Organization for Standardization (ISO) and NORSOK and The International Electrotechnical Commission (IEC). The standards are briefly discussed and only the general purpose and use of the standards are mentioned. For further description I refer to the standard or guideline itself.

In addition to the ones that are described in this section it is possible to find standards from the American Petroleum Institute (API), American Society Of Mechanical Engineers (ASME) and British Standard (BS) standards that also apply to subsea production systems.

The codes and standards cover mainly areas like

- Design
- Fabrication
- Quality control
- Qualification of equipment
- Testing of equipment

2.1.1 ISO 13628

ISO 13628 Petroleum and natural gas industries - Design and operation of subsea production systems

This standard provides general requirements, recommendations and overall guidance for the safe and economic development of offshore subsea production systems for the oil and gas industry. The intention of ISO 13628 is not to replace the individual engineering judgement but more to facilitate, complement and give guidance in the decision process to get the optimum solution. The reason behind this is to allow the use of a wide variety of technology from the well established to the state of the art of today. However, the standard encourages the users to look at the standard interfaces and the possibilities for re-use of intervention systems and tools, in the interests of minimizing life cycle costs and increasing reliability by the use of proven interfaces[2].

Part 4: Subsea wellhead and tree equipment

Part 4 of ISO 13628 specifies different types of subsea wellheads and subsea trees and the associated tooling necessary to handle, test and install these equipment. It also specifies the areas of design, material, welding, quality control, marking, storing and shipping for both individual sub-assemblies and complete subsea tree assemblies. This part of ISO 13628 is based on the old API specification 17D first edition[3].

Part 6: Subsea production control system

Part 6 of ISO 13628 is applicable to design, fabrication, testing, installation and operation of subsea production control systems. It covers surface control systems and subsea installed control systems. This equipment is utilized for control of subsea production of oil and gas and for subsea water and gas injection services[4].

Part 8: ROV Interfaces on subsea production systems

This part of ISO 13628 gives the functional design requirements and guidelines for ROV interfaces on subsea production systems for the oil and gas industry. It can be used for both selection and use of ROV interfaces to maximising the potential of standard equipment and design principles. This standard gives the users the possibility to select the correct interface for a specific application[5].

2.1.2 ISO 10423

ISO 10423 Petroleum and natural gas industries - Drilling and production equipment - Wellhead and christmas tree equipment

This ISO 10423 specifies requirements and gives recommendations for the performance, dimensional and functional interchangability, design, materials, testing, inspection, welding, marking, handling, storing, shipment, purchasing, repair and remanufacture of wellhead and x-mas tree equipment for use in the oil and gas industries. This standard is based on the old API specification 6A seventeenth edition[6].

2.1.3 NORSOK U-001

NORSOK U-001 Subsea Production Systems

The NORSOK standards are developed by the Norwegian petroleum industry to ensure adequate safety and cost effectiveness for petroleum industry developments and operations. Furthermore, NORSOK standards are as far as possible intended to replace oil company specifications and serve as references in the authorities regulations[7].

2.1.4 IEC 61508/61511

Functional safety of electrical/electronic/programmable electronic safety related systems

IEC 61508 covers those aspects need to be considered when electrical/ electronic/ programmable electronic systems are used for safety functions. An objective of this standard is to enable the development of electrical/ electronic/ programmable electronic safety-related systems where international standards may not exist.

IEC 61511 gives requirements for the specification, design, installation, operation and maintenance of a safety instrumented system, so that it can be confidently entrusted to place and/or maintain the process in a safe state. This standard has been developed as a process sector implementation of IEC 61508.

2.1.5 IWIS

The Intelligent Well Interface Standardisation (IWIS) panel is a number of oil companies organised to assist the integration of downhole power and communication architectures, subsea control systems and topsides by providing recommended specifications (and standards where appropriate) for power and communication architectures, and associated hardware requirements. This will give possibilities to implement more downhole 'smart' equipment in a timely and cost-effective manner.

Improving compatibility should also eventually benefit reliability, and transparency when tackled as an industry group[8].

2.2 Subsea environment

The subsea environment is one of the harshest, most corrosive environments in the world. It is a medium where material stress is enhanced, stream forces and impact damage is possible. It is also important to consider marine growth and seabed motions when building subsea equipment. The pressure is very high; to get a feel of this a comparison can be made. The outer space is at vacuum with 0 Pa, the pressure at sea level is 101 kPa while the pressure subsea equipment experiences at 3000 meters depth is 29430 kPa. That is approximately 300 times the pressure we experience every day.

Subsea equipment needs to handle the operating conditions and follow the standards developed. Some of the things that needs to be considered when designing subsea equipment are[9, 10]:

- Safety Integrity Level
- Barrier Philosophy
- System availability
- Subsea Monitoring
- Pressure
- Impact Protection
- Corrosion Protection
- Installation

The Safety Integrity Level requirements are defined techniques and measures required to prevent systematic failures from being designed into a system. These requirements can either be met by establishing a rigorous development process, or by establishing that the device has sufficient operating history to argue that it has been proven in use. Systems used subsea must have some barrier philosophy to reduce the chance of hydrocarbons leaking out of the reservoir into the sea. Today, usually two barriers are used between the seawater and the hydrocarbons. To always have control over the system availability is a important concept. Since the system can be located in over 3000 meters depth, it is important to design the equipment to be available at all times, this is usually solved with redundancy. The reservoir, temperature and pressure are constantly monitored to keep control over the production system. This ensures that everything is working and assists the operator

in preventing blow-outs and leakage. Impact protection is necessary when installing the system, and also for protection against animals and submarines.

2.3 Current subsea system

Today's typical subsea system is multiplexed electro-hydraulic and uses an alternating current (AC) feed from topside. For longer step-outs 3 phase AC is used[11]. Figure 2.1 shows a block diagram of this system. The multiplexed electro-hydraulic system is dependent on three blocks to operate; these are the Hydraulic Power Unit (HPU), Electrical Power Unit (EPU) and the Master Control Station (MCU). The hydraulic fluid is stored in subsea accumulators (under pressure) to individually operate the valve actuators on the x-mas tree. The high pressure hydraulic fluid and control signals are fed to the subsea production system on the seabed through an umbilical, containing several individual hydraulic hoses, electric cables, heating lines, thermal insulation and channels for delivering chemicals to the well.

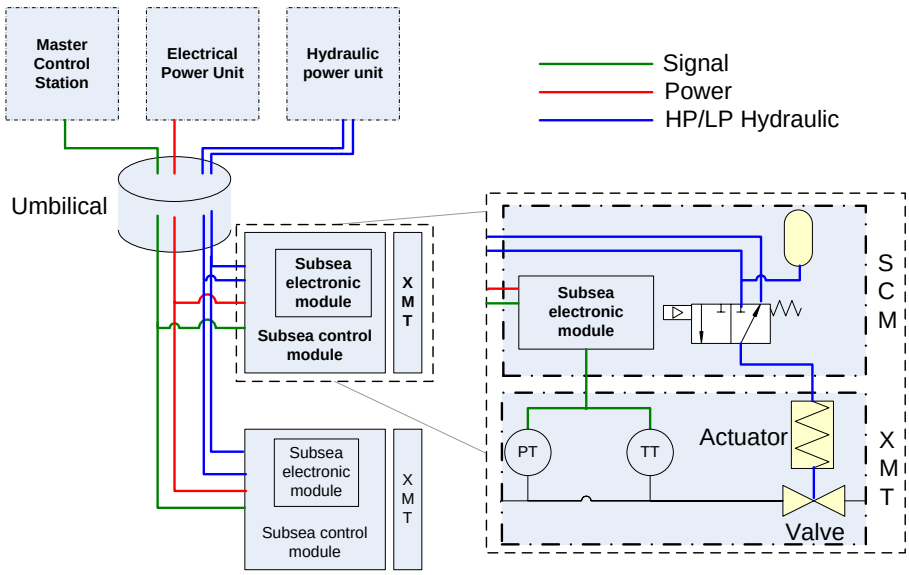

Figure 2.1: Existing subsea system

When the depth is increasing and the pressure becomes higher the springs for failsafe operation, accumulators and umbilical sizes gets bigger to keep up the response time and safety factors for the operation. Strict environmental regulations calling for zero emissions makes the construction of electro-hydraulic system increasingly more challenging because of the hydraulic oil.

2.3.1 X-mas trees

The structure of the x-mas tree is standardized. A schematic of the current electro-hydraulic control system is given in appendix B schematic 1. This schematic gives an overview of today's control system. It can be seen that all the hydraulic and electrical lines are connected through the SCM except some of the lines that are used for workover. Workover is not considered in this thesis but it means that another vessel can take control over the system for maintenance etc.

The x-mas trees functions are

- Control the production of hydrocarbons
- Safety barrier between the sea and the reservoir
- Safely stop produced or injected fluid
- Injection of chemicals to well or flowline
- Allow for control of downhole valves
- Allow for electrical signals to downhole gauges
- To bleed of excessive pressure from annulus
- Regulate fluid flow through a choke (not mandatory)
- Allow for well intervention

As seen from the list the function of a x-mas tree is both to prevent the release of hydrocarbons from the well into the environment and also to direct and control the flow of hydrocarbons from the well through the piping system. A picture of a x-mas tree is shown in figure 2.2 and a overview over a x-mas tree which shows the valves that needs to be controlled is shown in figure 2.3. The gate valves that the actuator described in this thesis can work on are:

- production master valve (PMV)
- production wing valve (PWV)
- annulus master valve (AMV)
- annulus wing valve (AWV)
- crossover (injection) valve (XOV)
- workover valve (WOV)
- surface controlled subsurface safety valve (SCSSV)

The considered valves in this thesis are the two first, the PMV and the PWV, which control the flow of hydrocarbons when producing. These two valves are the biggest on the tree and will give the worst case design for the actuator.

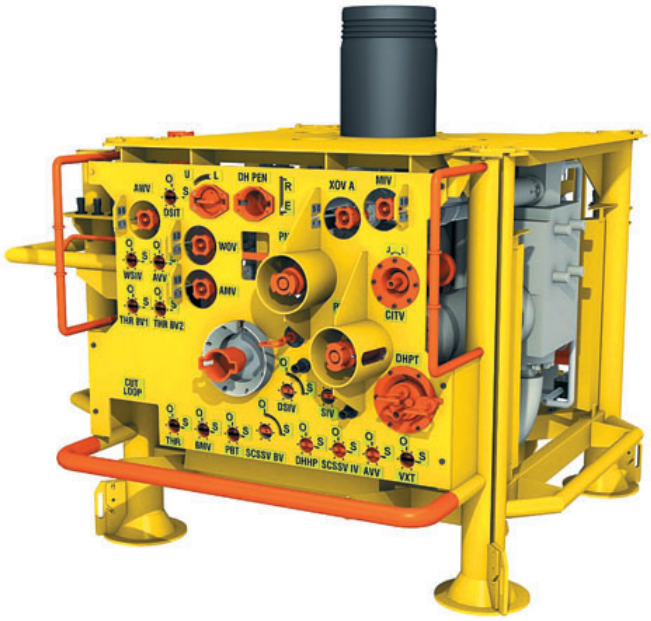

Figure 2.2: X-mas tree

X-mas tree operation

Today the x-mas tree is remotely operated through a multiplex system. With modern power and signal technology the production is continuously monitored with pressure and temperature as well as valve actuation and status are being routed to the PC's topside. Pressure and temperature sensors are installed in the production flow both upstream and downstream also seen in figure 2.3. The x-mas tree also provides possibilities to monitor pressure and temperature down in the production tubing. Pressure and temperature sensors are often duplicated for redundancy. Modern fields are often designed with sand and/or erosion probes to detect sand production and/or erosion in system. When the well is ready to produce, the valves are opened to release the hydrocarbons through a pipeline leading to a refinery, to a platform or to a FPSO. It is also used to control the injection of gas or water on a none-producing well in order to sustain volumes. On producing wells, injection of chemicals, alcohols or oil distillates are used to solve production problems. Functionality may be extended further by using the control module on a subsea tree to monitor and react to sensor inputs on the tree or even down the well bore.

Packaging of electrical systems

Today ISO standard 13628-6 specifies how the electronic circuits should be packaged. The standard states that all active electronic circuits should be in enclosures filled

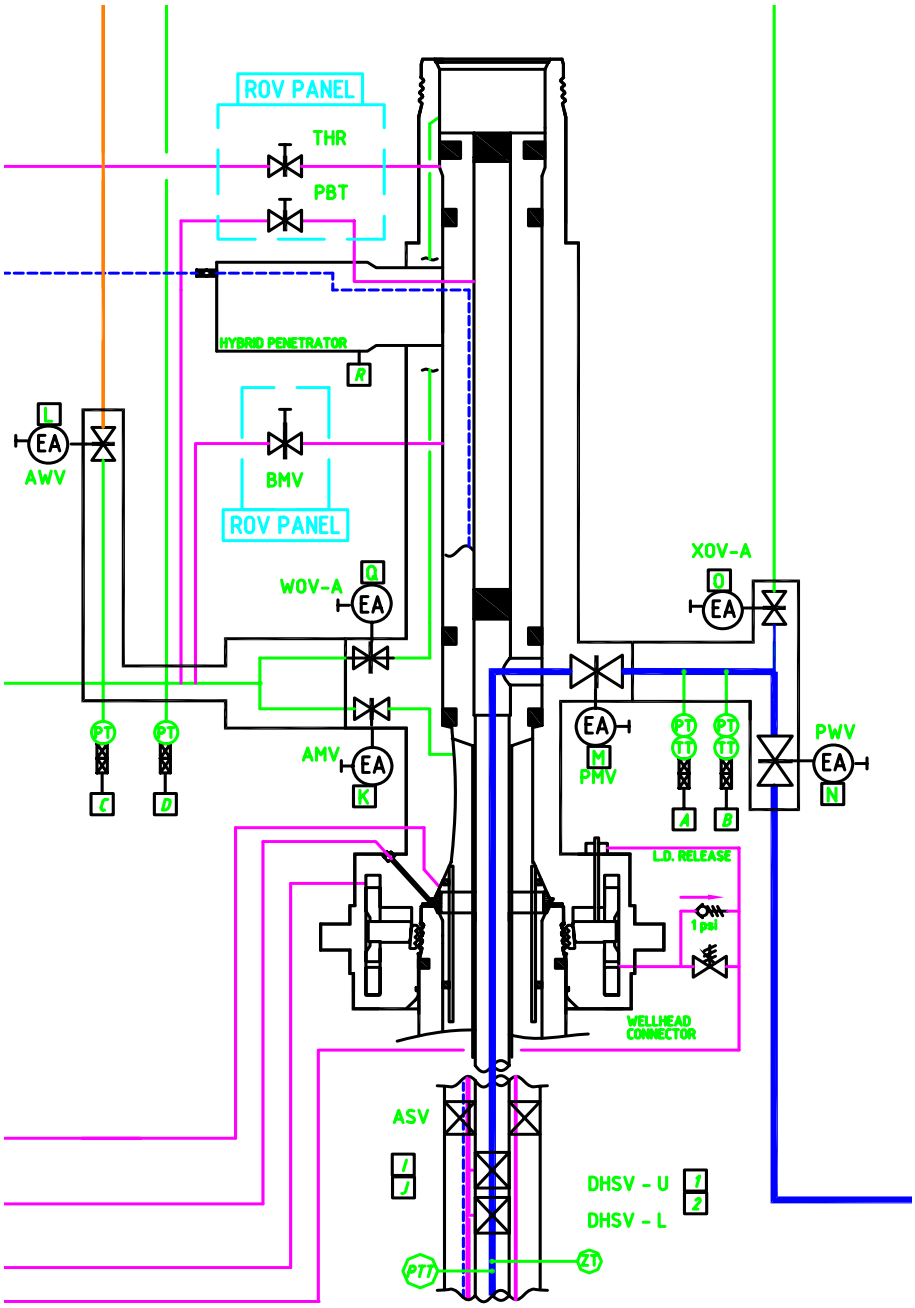

Figure 2.3: X-mas tree schematic

with nitrogen gas at nominal 0,101 MPa (1 atm) pressure designed for full external pressure conditions.

(a) Subsea control module

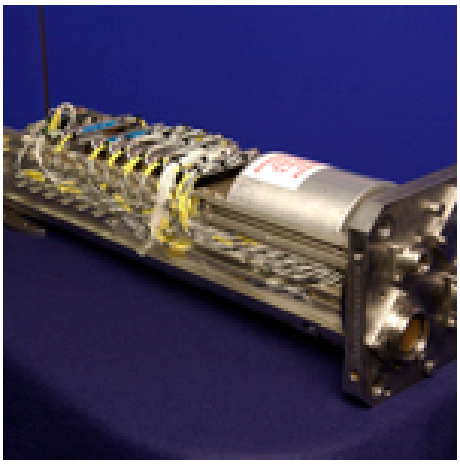

(b) Subsea electrical module

Figure 2.4: Today's packaging of subsea equipment

In the electro-hydraulic system, all of the electronics are included in an SCM mounted on the x-mas tree. An SCM is a retrievable housing containing all the electro hydraulic items together with signal feedback type instrumentation[12]. The SCM also includes one or two SEM's which contain all the electronic cards that are used to control the subsea system. Figure 2.4 shows an SCM and an SEM. The SEM is installed inside the control module and it is usually two for redundancy proposes. The ISO standard states[4]:

> The SEM shall be protected against water intrusion. The design should include two separate and testable barriers.

2.3.2 Subsea gate valves

A subsea gate valve is used to control the flow of fluid from the reservoir through the x-mas tree and into the pipeline system. This round or rectangular disc is moved in a linear direction by a stem that makes the valve open or close. Gate valves are used where a minimum of pressure drop through the valve and uninterrupted flow is important. There are two types of gate valves; standard and through conduit. When the gate is wide open, the gate is entirely out of the flow passage for the standard type valve while the flow goes through a hole in the gate for the through conduit type. The distinct feature of a gate valve is that the sealing surfaces between the gate and seats are planar. The gate valve is usually designed to be either fully open or fully closed, this is recommended, since the gate or seal has a tendency to erode rapidly when restricting flow and it will also produce turbulence if the gate is in

a partly open position. This is particularly important, in the oil and gas industry, since the pressure of the fluid in the reservoir is so high that when half open the fluid, hydrocarbons, sand, water etc., start erode on the stem[13, 14].

The gate valves motion can be described by five different stages shown in figure 2.5.

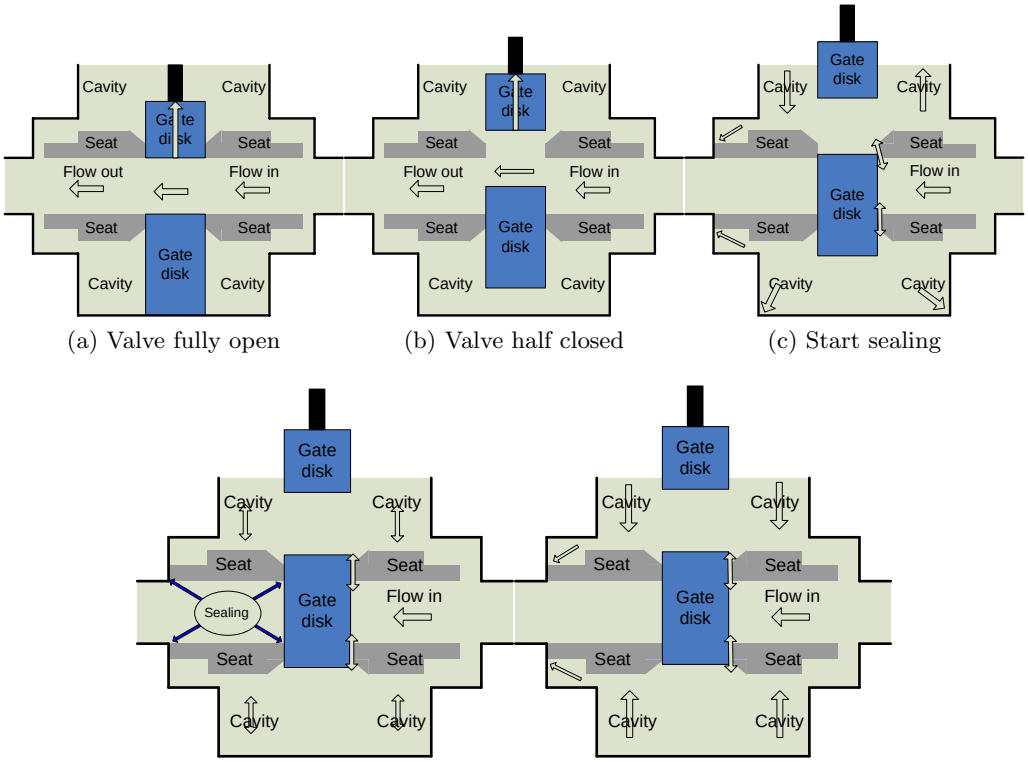

(a) Valve fully open (b) Valve half closed (c) Start sealing

(d) Valve fully closed (e) Crack open

Figure 2.5: Stages of a gate valve

When the valve is fully open, nothing stops the flow through the pipe as figure 2.5a shows. It should be noticed that there is an opening between the seat and the outer sealing. This opening is used so the fluid can flow into the cavity of the valve. As seen in figure 2.5b the gate becomes an obstacle when the valve is closing. The flow is reduced through the pipe and the flow into the cavity helps the valve to close. When the gate is nearly closed the pressure between the seat and gate becomes so high that the seat is pushed into the valve and the sealing mechanism starts to work seen in figure 2.5c. Most of the valves used in the oil and gas industry are downstream sealing valves. This means that the sealing surfaces are on the downside of the gate. The seats on the upstream side of the gate do not contribute to the sealing. Figure 2.5d illustrates when the valve is fully closed and the sealing mechanism is fully working; now all the flow is stopped. The cavity pressure is now contributing

to keep the valve in a closed position, this is stated in the ISO13628-4[3] and is a requirement for a subsea gate valve that is working as a barrier on a x-mas tree.

The last figure 2.5e shows all the forces that must be overcome by the actuator to crack the valve open. Cracking the valve open is the operation that needs most power since it needs to overcome all the working forces in the valve. When operating subsea usually pressure is applied from above for easier operation, but it is a requirement that the valve and actuator should be possible to test at surface with full pressure in bore.

2.3.3 Gate valve actuators

The gate valve actuator converts fluid pressure into linear movement. A solenoid is pulsed by an electric signal which opens a latch for the high pressure hydraulic line and hydraulic oil is flowed into the actuator. This oil goes into the actuator with a piston and a spring inside. The piston is attached to the upper end of the stem, which in turn is attached to the gate at its lower end like the figures in 2.6 illustrates. The valve is in closed position when not pressurised shown in 2.6b. When the hydraulic pressure works on the piston area, it forces the spring to contract, and thereby the piston and stem to move. When the spring is fully compressed, the gate is in a fully open position 2.6a. From the figure it can be seen that the hydrostatic pressure subsea is working on the stem and is helping in opening direction while the pressure inside bore is helping in the closing direction.

Today's actuators are designed to be 100% failsafe. This means that it should always be possible to operate the valve despite any failure that the system can or has experienced. The failures a subsea system can experience are power failure, communication failure, pressure drop in the hydraulic lines, mechanical failures etc. One of the safety features that is used in today's actuators is the spring. This is used to help the valve close when or if something fails. If the hydraulic pressure, electric power or signal is lost the spring ideally releases and helps the valve close until control is re-established. One problem that many overlook with springs is the fact that they can fail. The main reason is that a gate valve is seldom used, when it has been opened and the field is producing hydrocarbons it can take years before the valve is operated again. Since the spring can fail another failsafe has been included this is the ROV override. The only way to operate it is manually down at the seabed by a ROV.

2.4 Next generation subsea system

The next step for a subsea production system will be All Electric, illustrated in figure 2.7. The use of an all electric system means that all the hydraulic fluid is replaced and electricity will control the actuators. This is described in [11] and

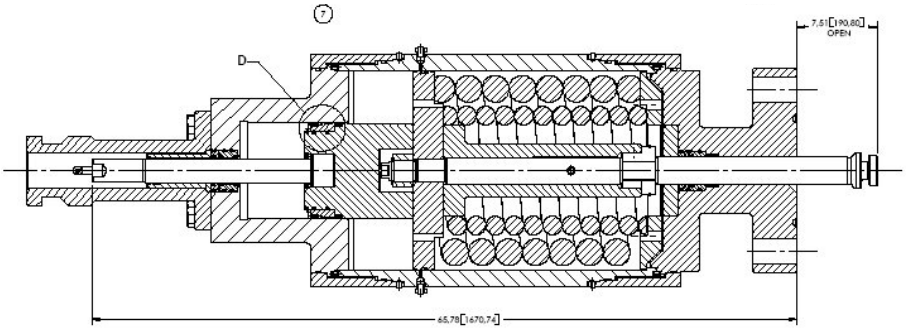

(a) Open actuator, fully pressurized

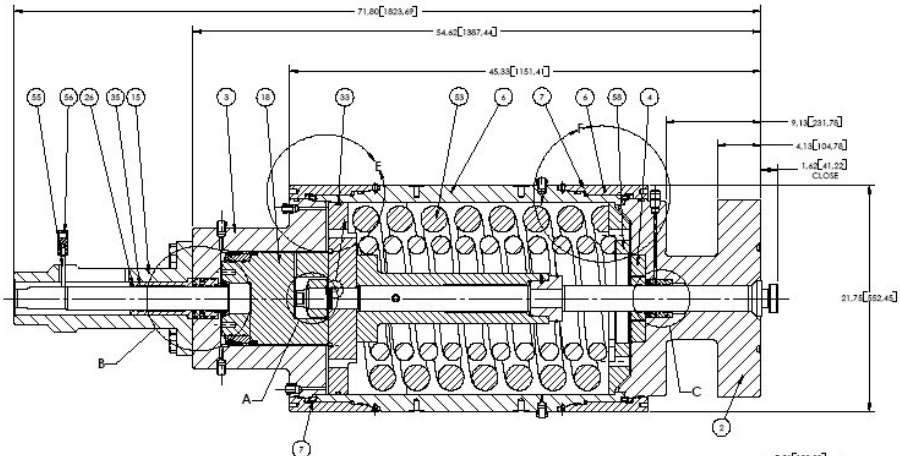

(b) Closed actuator, no pressure

Figure 2.6: Existing actuator

[13]. An all electric system will have, if possible, no springs or accumulators and the size of the umbilical will be reduced since no hydraulic oils need to be transported to the production system. The all electric system could operate on a high voltage direct current(DC) link that is transported through a thick copper conductor. For communication, fibres will be used. The next generation systems will give an the ability to deploy electric production trees that will be robust, fault tolerant, scaleable electric system that will be easier to monitor and control.

Some of the reasons for going all electric are given in [13], these are;

- replacing the complex electro-hydraulic umbilical with an all-electric umbilical
- elimination of hydraulics simplifies the subsea system and reduces the number of seals and potential leak paths and wears components, which will effect the reliability of the system
- ability to increase step-out distance with minimal change to hardware, and at minimal cost will give significant cost savings, compared to an expensive

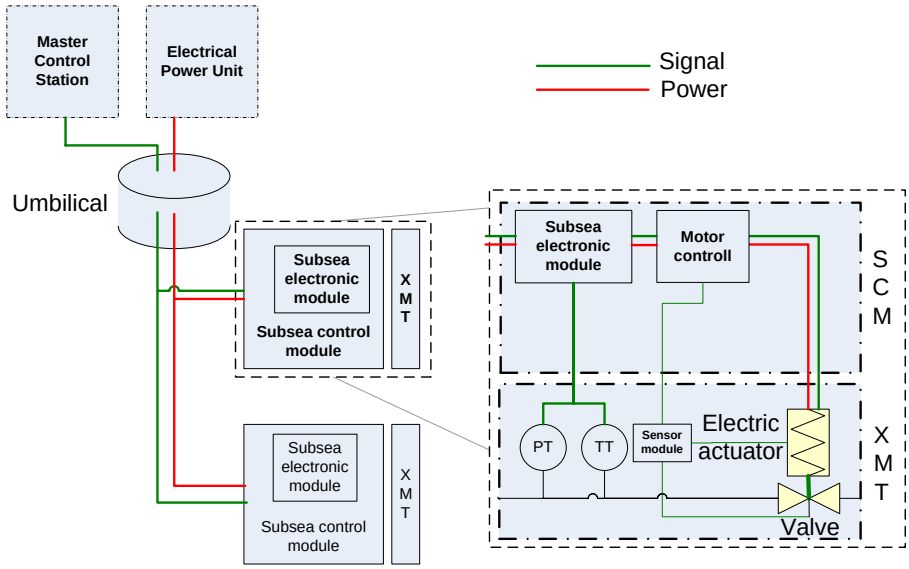

Figure 2.7: Next generation subsea system

electro-hydraulic solution

- to increase reliability, flexibility and improve operational system

The difference from an electro-hydraulic x-mas tree compared to an electric x-mas tree is that the hydraulic actuators are replaced with an electric actuator. When switching from an electro-hydraulic system to an electrical system wiring is needed. This wiring will replace the piping that the hydraulic oil has been using. The focus in this thesis will be an electric actuator and the driver control system needed to control the electrical actuators on an electric x-mas tree.

Chapter 3

Functional design specification

The requirements that are used in this thesis are listed below, the rest of the FDS is enclosed in appendix D.

3.1 General requirements

Design data	
Valve bore:	5-1/8'
Design pressure:	690bar(10000psi)
ISO valve specification:	10423/13628-4
Actuation type:	Electrical, with ROV override and mechanical or electric fail-safe
Override method	Rotary
Maximum override force	1350 Nm Torque
ROV interface	Class 4
Failed position	Fail close
Valve stroke	5.89'
Design depth	3000 m
Weight	75kg

Table 3.1: Design data

The override method shall be rotary and it should be possible to open the valve with a ROV using maximum 1350 Nm torque, using a class 4 interface. This is stated in ISO 13628-4 and 10423. The reason that the weight limitation is 75kg is because this is what a ROV can carry alone without help from any other equipment.

3.2 Operational requirements

1. The electrical actuator shall preferably open the valve within 10-20 seconds under full differential pressure. This shall be based on following operation conditions:
   - Surface condition at max and min pressure in bore.
   - Subsea condition at max and min pressure in bore.

The best-practise for operation of a valve given from the oil companies is that a valve shall use approximately one second for one inch movement in any direction.

3.3 Emergency requirements

1. The electrical actuator shall close within 15 seconds without use of electrical power in the case of emergency shut down, alternatively a SIL3 (defined in IEC61508-5) rated safety function can be used (e.g. power storage).
2. If use of actuator spring for fail close operation of the valve, the spring shall be designed for a minimum mean spring life of 5000 cycles.

3.4 Design requirements

1. Interface between actuator and ROV shall be according to ISO13628-8, class 4. Greater or smaller interface may be selected upon selected solution for override loads.
2. Design shall consider marine growth, fouling, corrosion, hydraulic operating fluid and, if exposed, the well stream fluid.
3. Actuator should have a positive mechanical lock in open position, so power can be released.
4. The actuator shall be possible to replace subsea.
5. The actuator shall have an electrical position indicator that identifies the valve status and position.
6. The actuator shall have a self contained lubrication and compensation system. An open pigtail tube solution to sea is not acceptable. The actuator and all its components shall be in a closed and pressure balanced compensator system. The system shall be flushed clean according to NAS1638 class 6 or better.

3.5 Barrier requirements

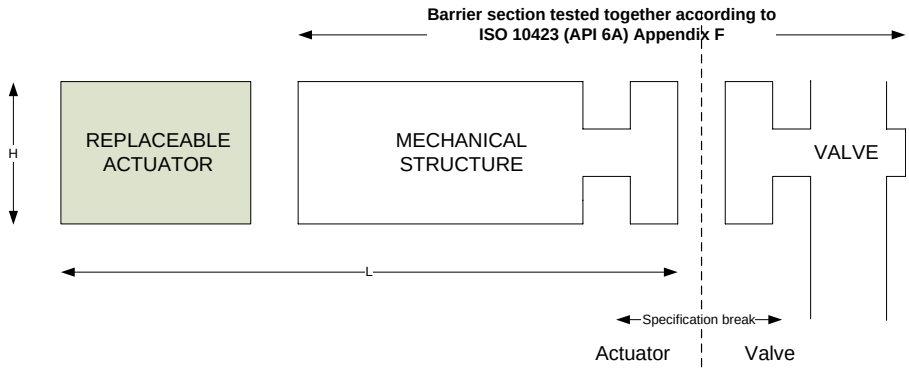

Figure 3.1: Barrier requirements

Three options for barrier requirements are stated in the FDS, depending on different designs. A barrier is used to keep the oil from flowing out into the sea. A barrier section is a section which is tested together onshore and deployed together. This section is not possible to replace subsea. As seen from figure 3.1 the valve and the mechanical structure are tested as a barrier section, the replaceable actuator is not. This means that the actuator can be replaced but not the mechanical structure and the valve. If these structures should be replaced the entire x-mas tree must be pulled and the section must be replaced with a new section that is tested and deployed together. Also seen from the figure is the specification break. The meaning of this is that the valve is constructed after one specification and the actuator after another. These two specifications will merge at the point where the interface between them is discussed.

3.6 Size limitations

The sizes were found out from figure 2.6 in chapter 2, which shows the existing hydraulic design. The size limitations are also stated in the FDS. The requirement is that the electrical actuator solution must not be bigger than the current hydraulic solution. The size limitations are shown in figure 3.2.

From the figure it can be seen that the failsafe chamber is quite large. The reason for this is the spring that is used in the current solution. The size of the failsafe solution is therefore decided to be the same as the current solution. This means that the motors and gears and drivers must be fitted into the remaining space that will be 0.51 meters long and 0.46 meters high.

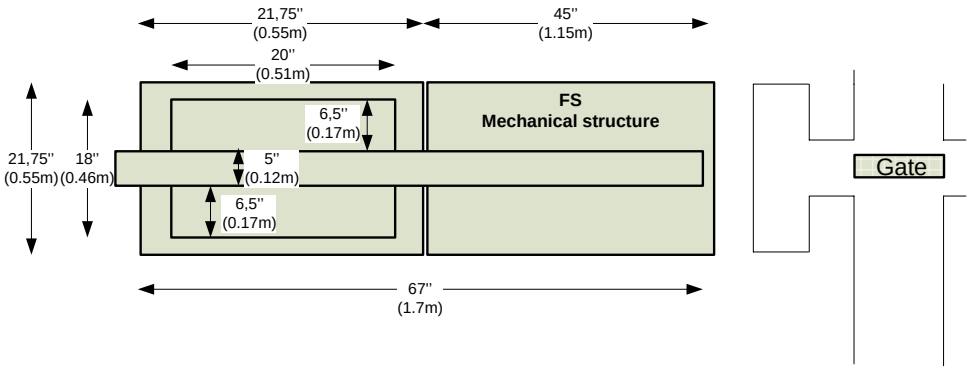

Figure 3.2: Actuator size limitations

3.7 Load requirements for an actuator

To conform to today's ISO specifications and the FDS the actuator must be tested and work under these load conditions[3, 6]:

1. Crack open at surface; 0-pressure in bore
2. Crack open at surface; Full-pressure in bore
3. Crack open at subsea; 0-pressure in bore
4. Crack open at subsea; Full-pressure in bore

The standard also states that the cavity pressure in the valve shall help in closing direction. This means that if the actuator is open and the hydraulic pressure or the electrical signal is lost the cavity pressure will help the spring close the valve.

The worst case load condition that the actuator then must be designed to meet is the crack open at surface with full pressure in bore. The reason that this is worst case is that at surface no other forces are helping on the actuator stem. Subsea the hydrostatic pressure will help in the opening direction pushing on the stem; while the pressure in the bore is helping in the closing direction. This means that all calculations that are preformed are based on the test requirement for cracking open the valve at surface with full pressure in bore since this will give the highest forces and the worst case power for the actuator.

3.8 Worst case load calculation

The calculation done here is to show the worst case linear force that is needed to operate the valve at surface with full pressure in bore as described above. The forces shown here are just the linear forces without the actuator. The calculation is done

with a spring as a failsafe solution, since the spring will add the most forces to the system than any of the other possible failsafe solutions discussed in the next chapter.

The actual force required will include the forces from the actuator itself mostly the friction forces that the screw solution will add to the system. Different solutions with the actual forces are calculated by [1], some of the answers are summarized in the next chapter. The actual required force will depend on the design of the actuator. Today's hydraulic actuator is a linear actuator and the calculated force this linear actuator must overcome is shown here. The full linear calculation is shown in appendix A.

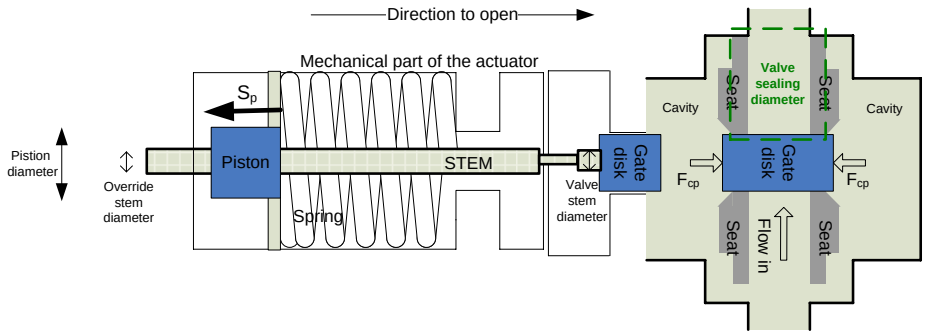

Figure 3.3: Force balance

Figure 3.3 gives an overview over some of the forces that will work. The force balance to get the net required force to crack open the valve with full pressure in bore at surface is given from the equation 3.1.

$$F_{co} = S_p + S_{pf} + F_{cp} + F_{frs} + S_c \cdot 1in \tag{3.1}$$

The working forces to get the net required force to crack open with full pressure in bore at surface(F_{co}) is the spring preload, the cavity pressure, the static friction to overcome and the spring constant times one inch. The reason for multiplying the spring constant with one inch is that this is the distance that is needed to be overcome to get over from a crack open state to an open state where the system is moving and the friction is going from a static friction to a dynamic friction. This is explained in [13].

Table 3.2 shows the results of the force that is needed to be overcome to crack the valve open at surface with full pressure in bore using a linear actuator. As seen the result is 154997lb which is the same as approximately 70000kg without the spring the linear forces for cracking open the valve will be 55000kg as given in the FDS.

Force calculation results	
Static friction force(F_{frs})	62345lb
Seal packing friction(assumed), S_{pf}:	6000lb
Spring preload(valve closed), S_p:	30202lb
Spring constant, S_c:	4160,27lb/inch
Cavity pressure(F_{cp})	56450lb
Net required force to crack open(F_{co})	154997lb

Table 3.2: Force calculation results

Chapter 4

Electric actuator design

The main parts in an actuator are listed below:

- Gear
- Motor
- Motor controller

The gear is used to optimize load and revolutions/min for the motors. Other important aspects that need to be considered especially for subsea applications are;

- Packaging of motor drivers
- Failsafe solutions
- Redundancy
- Conversion of rotational movement to linear movement

4.1 Chosen designs

This thesis has considered two designs for an electric actuator. The designs considered must conform to the FDS described in chapter 3. Option two under the barrier requirements from the FDS, in appendix D, for design is shown in figure 3.1 in chapter 3. This is used as a base for the proposed designs. This option has a replaceable actuator and a none replaceable mechanical structure which is part of the barrier section. This none replaceable structure can include the failsafe solution. The reason for choosing option two was that; option one in the FDS will be difficult to design under the given weight requirement, since the design also must include the failsafe solution, and for option three the length of the actuator would be a problem.

The two designs that is used and investigated in this thesis are illustrated in figure 4.1.

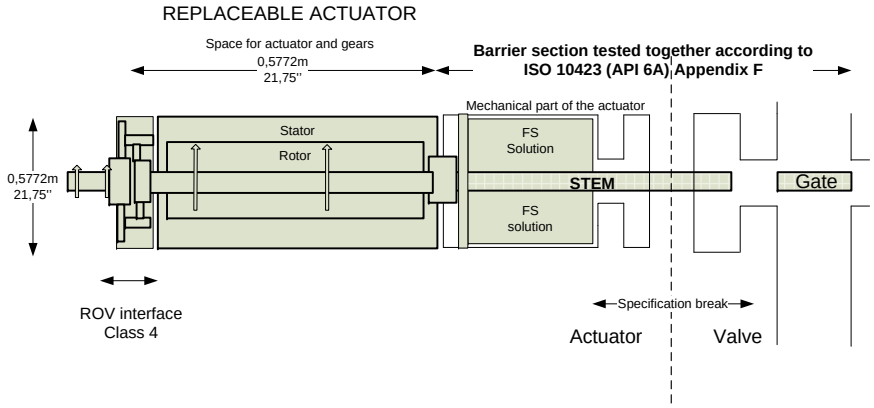

(a) Direct driven motor without gear

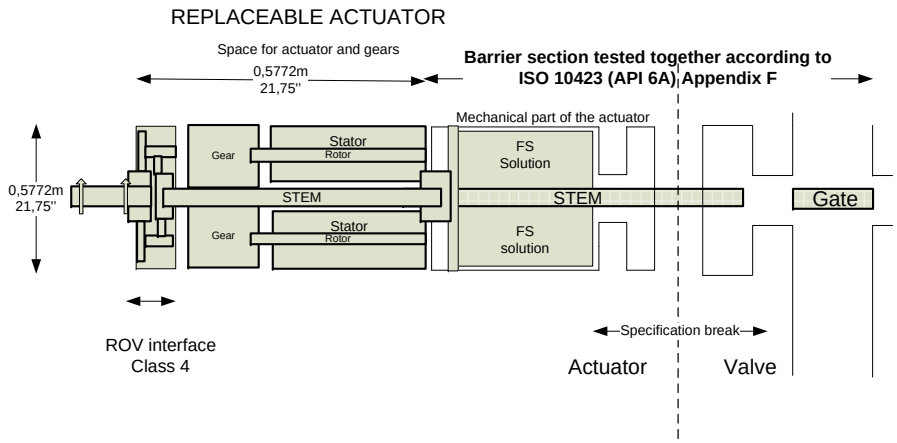

(b) Small motors with gearing

Figure 4.1: Considered designs

The first solution is a direct drive one illustrated in figure 4.1a. In this thesis direct driven means that the rotor in the motor is directly connected to the nut, as shown in the figure. When the motor is running the nut will rotate with the rotor and the stem which is a screw will open and close the gate valve depending on the direction of the rotor. The figure shows a valve and an actuator side. The barrier section which is the valve side in addition to the failsafe must be tested according to ISO 10423 standard and deployed together. The replaceable actuator which consists of the motor and the gear can be replaced as one as the requirement has stated. This thesis is just considering the replaceable actuator shown in the figure, the mechanical part of the

actuator which is a part of the barrier and the failsafe solution are mentioned but not considered in any detail this is considered in more detail in [1].

The second design shown in figure 4.1b illustrates a solution where a gear is connected to a nut on the stem. The gear is driven by small motors that are located around the stem. The stem is a screw moving in a linear direction, the nut is rotated by the gear. This makes the gate open and close depending on the rotating direction of the motors. The same aspects regarding the barrier section and the replaceable actuator are applicable for this design.

The replaceable actuator will include a ROV override. This override will make it possible to operate the valve if something fails inside the replaceable actuator. The ROV override must conform with the ROV interface class 4 which is stated in ISO 13628-8[5]. This means that it should be possible for a ROV to operate the valve with a ROV tool which can give a torque up till 1350 Nm. The ROV override is not looked at in this thesis.

4.1.1 Rotational to linear movement

(a) Acme screw

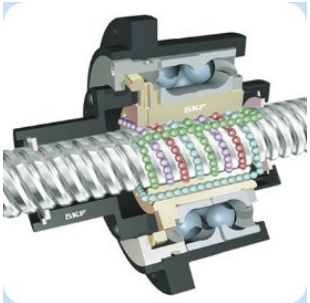

(b) Ball screw

(c) Roller screw

Figure 4.2: Screw types

A way to get a rotational movement into a linear movement is by using a screw. The acme screw in figure 4.2a has been used and tested in the oil industry for many years, the problem with the acme screw is that it has very low efficiency. The positive thing with the acme screw in an actuator application is that they can be built self locking[1]. Because of this property there will be no need to build a stopping mechanism if a spring is used for failsafe. Because of the low efficiency other screw types has been considered. These screw types do not have the property of self locking, so a mechanism for holding the spring(if used) must be made. This is not considered here. The considered screws in addition to the acme screws are the ball screw in figure 4.2b and the roller screw in figure 4.2c. Table 4.1 shows the difference between roller screw, acme screw and ball screw[15].

Screw properties			
	Roller screw	Acme screw	Ball screw
Load ratings	Very high	High	High
Lifetime	Very long	Very low, due to high friction and wear	Moderate
Speed	Very high	Low	Moderate
Acceleration	Very High	Low	Moderate
Electronic positioning	Easy	Moderate	Easy
Stiffness	Very high	Very high	Moderate
Shock loads	Very high	Very high	Moderate
Relative space requirements	Minimum	Moderate	Moderate
Friction	Low	High	Low
Efficiency	Around 80%	Around 20%	Around 80%
Maintenance	Low	High due to poor wear characteristics	Moderate
Environmental	Minimal	Minimal	Minimal
Self locking	Yes	No	No

Table 4.1: Properties of different of screws

4.1.2 Gear solutions

In [1] four types of gear solutions and one direct driven solution have been investigated. Two gear solutions were chosen for further investigation. The two gear solutions that are further investigated are shown here and the input that the gears need from the motor is given in the next section. To review the calculations and what decisions that has been made [1] should be read. This section (4.1.2) is a summary of what [1] has concluded.

Gear solution 1

Gear solution 1 is shown in 4.3. It was found to be the most compact solution. It consists of three external spur gears functioning as pinions which are driving an internal spur gear. Using an internal spur gear, allows for a high ratio range and also high load carrying capacity. The internal spur gear will be directly attached to nut, driving the chosen screw and valve stem back and forward. The diameter for this solution is given in tabletab:solution1.

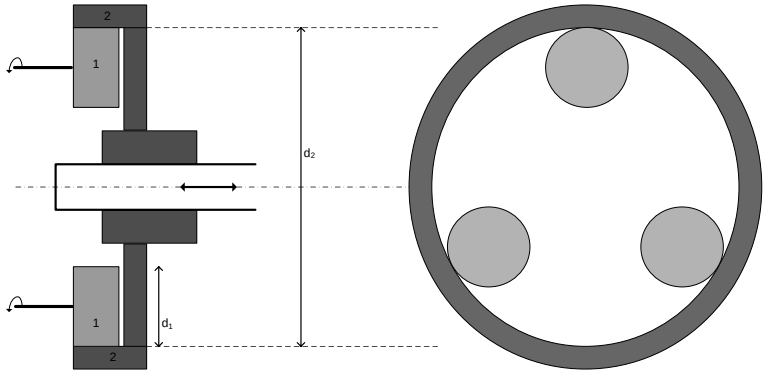

Figure 4.3: Gear solution 1

Gear sizes			
Diameter, input/pinion	d1	3in	0.0762m
Diameter, output/gear	d2	16in	0.4064m
Diameter, total			0.5m
Length, total			0.20m

Table 4.2: Size of gear solution 1

Gear solution 2

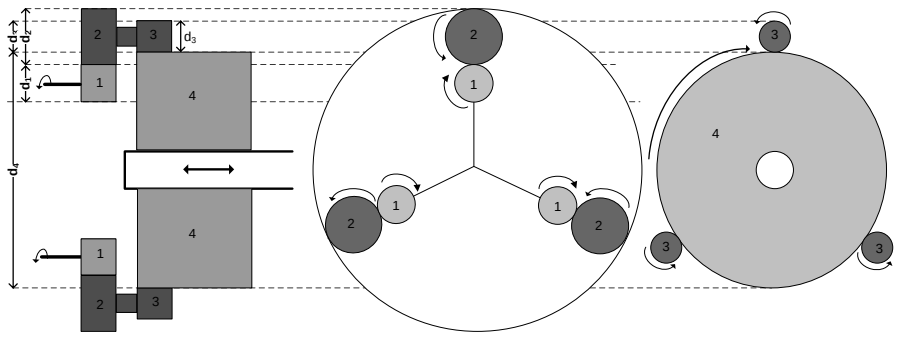

Figure 4.4: Gear solution 2

Gear solution 2 is shown in figure 4.4. This gear requires the least amount of torque from the motors. It consists of three external spur gears each driving another external spur gear. These second spur gears are directly attached to three other smaller spur gears which are driving one large external spur gear. The reason for the low power requirement is the use of two spur gears on one shaft. This solution is much more complex than the first one, and will be longer than gear solution 1, comparing the length in table 4.2 and 4.3.

Gear sizes			
Diameter, input/pinion	d1	2in	0.0508m
Diameter, gear2	d2	3in	0.0762m
Diameter, gear3	d3	2in	0.0508m
Diameter, gear4	d4	12in	0.3048m
Diameter, total			0.5m
Length, total			0.3m

Table 4.3: Size of gear solution 2

Mechanical data

The torque, speed and maximum motor diameter is given in this section. These numbers are calculated in [1]. These numbers will be used to estimate the size of the chosen motor in the next chapter. The table 4.4 is built up of three different solutions direct driven, gear solution 1 and gear solution 2. All the solutions are calculated with three different screw types; acme, roller and ball screw. The data given here is also shown in the next chapter where the motor sizes will be estimated.

Mechanical data			
Input data direct driven			
	Acme screw	Ball screw	Roller screw
Speed, rpm	90	90	90
Torque, Nm	2847	747	660
Maximum diameter, m	0.53	0.53	0.53
Input data for gear solution 1			
	Acme screw	Ball screw	Roller screw
Speed, rpm	520	520	520
Torque, Nm	188	50	44
Maximum diameter, m	0.12	0.12	0.12
Input data for gear solution 2			
	Acme screw	Ball screw	Roller screw
Speed, rpm	900	900	900
Torque, Nm	112	30	26
Maximum diameter, m	0.17	0.17	0.17

Table 4.4: Input data for the different design solutions

4.1.3 Failsafe solutions

In this thesis failsafe solution that can be used is not considered in any depth.

There are three possible failsafe solutions that can be used;

- Springs
- Electro magnets and/or PM's
- Batteries, super capacitors

Today a spring is used to help the valve close if something fails. The problem with the spring is that the size of the spring increases with increasing water depth.

Most of the current actuators are linear, explained in chapter 2, using hydraulic fluid to hold the spring in tension. When the pressure in the hydraulic fluid is lost the spring is released and the valve will close. With an electrical solution which can be a rotary solution using motors this failsafe mechanism will be more difficult to solve. Some solution must be made to keep the spring in tension and rules for when the spring is released must be made.

Electro magnets and/or PM's can be used as a failsafe solution. Using one PM and one electromagnet, when a failure occurs a current can be released into the electromagnet making it change direction of the field and repel the PM. A system with an electromagnet solution must have local storage.

Batteries or super capacitors can also be used as failsafe. If something happens the batteries releases the stored energy into the motors which will driver the gate into closed position.

Chapter 5

Electric machines

5.1 Types of electric machines

Rotating electrical machines – generators and motors – are devices that transform mechanical power into electrical power, and vice-versa. There are many different types of electrical machines currently used in a variety of applications. They can be arranged in three categories, these are

- DC machines - Shunt, series, compound, separately-excited dc motors and switched reluctance machines
- AC machines - Induction, wound-rotor synchronous, permanent-magnet synchronous, synchronous reluctance and switched reluctance machines
- special machines - Switched reluctance machines

All of the machines are available at power ranges from watt(W) to MW and some of them are shown in figure 5.1[16].

A motor converts electric energy into mechanical energy, torque. All motors have several basic characteristics in common. There basic parts include[17]:

- A stator - the frame and other stationary components
- A rotor - the rotating shaft and its associated parts
- Auxiliary equipment

The number of possible options is large, the selection of a final design thus becomes a very complicated process. The objective of this section is to illustrate some of the available motor candidates and types, and chosen one for this type of application.

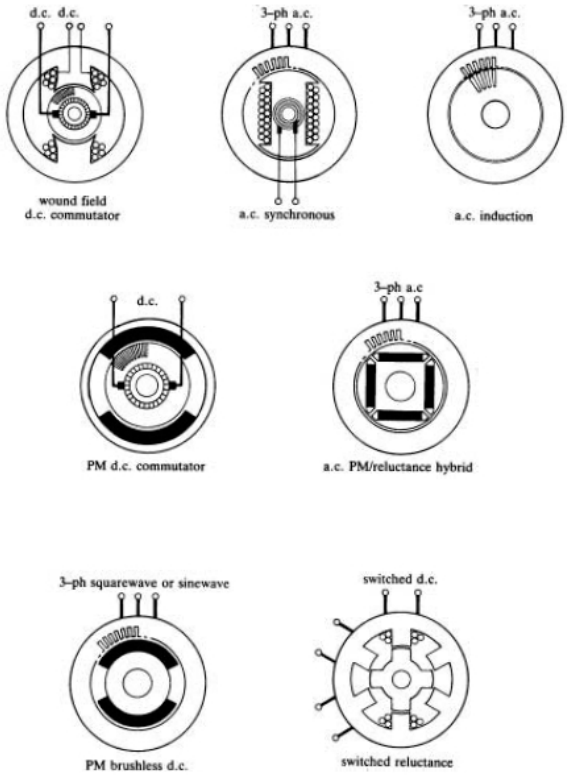

Figure 5.1: Overview of electrical machines

5.1.1 DC machines with commutators

DC machines usually have windings in the rotor and permanent magnets (PM) in the stator, it is also possible to replace the PM with windings. In order to transfer the current to the rotor windings, the DC motor is equipped with brushes and a commutator. Figure 5.2 illustrates how a two phase DC motor look like [18]. The maximum torque is produced when two fluxes are in quadrature, these fluxes are created with one/two current carrying conductors and/or a permanent magnet[19]. The figure 5.2 shows a motor that consists of an electromagnet, an armature and a commutator with its brushes. The magnetic field will be generated from the current flowing in the field winding. A voltage is applied at A, these causes a current to flow in the armature loop, indicated by the arrows. Current flowing in a loop or coil of wire produces a magnetic filed, this is what happens in the armature. A second magnetic field is produced, with poles N and S perpendicular to the armature loop. The north pole of the main magnetic filed attracts the south pole of the armature filed. At the instant the north and south poles become exactly opposite, the commutator reverses the current in the armature, making the poles of the field and the armature opposite and the loop is repelled and it will rotate. The field

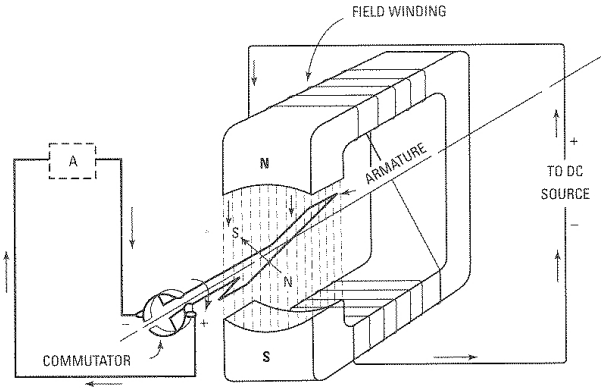

Figure 5.2: DC machine with commutators

windings can be replaced by PMs; this will make the motor smaller. To control a DC motor at least four power transistors in an H-bridge configuration must be used. This is less than for an three phase AC machine which needs six power transistors in an variable speed drive[18].

The DC machines are mostly used to control small apparatus like screen wipers, cd-players fans, pumps etc. For machines that have a commutator and/or brushes reliability is not the problem, rather the limitations that the commutator puts on the rotational speed and the maintenance that is required for the brushes.

5.1.2 Induction Machines

Induction Machines (IM) are the same as an asynchronous machine, they are the most used machines in the world and they may generally be set in two categories, those with squirrel cage, and those with wound rotor. A squirrel cage motor is shown in 5.3. The IM is considered to be the workhorse in industrial applications, the reason for this is that they are cheap and fit most applications. This makes the IM good for mass production for applications that do not have low weight and size requirements. Another positive thing with IM's is that they are possible to control directly from the supply without any converters. This makes it the IM's a good alternative in many applications. The IM is provided with two windings, one on the stator, and one on the rotor. The stator winding of the induction motor has two functions. It provides the excitation or magnetisation, and carries the armature or generated current. The rotor winding carries the armature current only. When AC excitation is present, the magnetic field created rotates at a speed determined jointly by the number of poles in the winding and the frequency of the current, synchronous speed. If the rotor rotates at a speed other than the synchronous speed, voltage is generated in the rotor winding at a frequency corresponding to the difference in

the two frequencies, known as the slip frequency. This voltage drives the armature current, and provided that the rotor speed is faster than the synchronous speed, the machine acts as a generator. The function is thus asynchronous[20, 21].

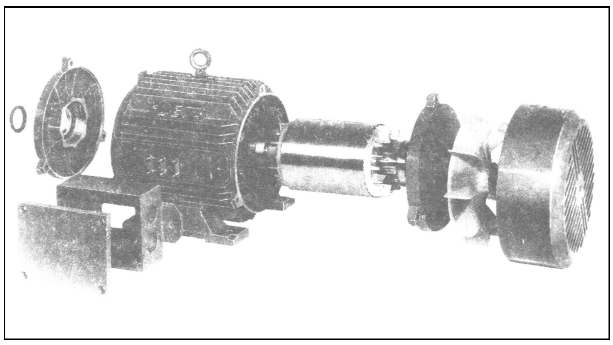

Figure 5.3: Squirrel cage machine

The IM is robust and very cost effective for its size. The problem with it, is that it has rotor losses due to the current in the rotor bars and since the rotor is difficult to cool because of the small airgap with limited heat transfer, makes the rotor hot and this again effects the rated power and lifetime of the IM.

Due to the small air-gap, the IM leakage flux increases to an unacceptable limit for machines with many poles. This causes the difficulty that the machine cannot use the current flowing to generate torque, but only leakage flux. Induction Machines with a large number of poles must be large enough to accommodate a sufficient number of slots per pole per phase, in order to prevent this situation from taking the upper hand. This means that induction machines with many poles will inevitably be oversized in relation to the rated output[21].

5.1.3 Permanent magnet machines

Electrical machinery has been using PM for over 100years, but because of recent improvements in their properties and availability their application in electro-mechanical and electronic devices is rapidly increasing. Much of the reason for the market is that lately the prices for rare earth neodymium-iron-boron (NdFeB) material has been following a descending curve and the interest for PM machines is ascending, also the progress in power electronics have played an important role. Another bigger benefit is that PM machines have very high torque density. This means that they can be built small and compact because of less material is needed. These machines are usually custom made for each application, and by grouping the windings inside the apparatus the motors can be built with redundancy[22]. The PM motors can also be run flooded with water this has been done in [23]. The spectrum of electrical systems that employ magnets is extremely broad. Some examples of industry appli-

cations are pumps, elevators, ship propulsion drives, electrical vehicles, actuators, robots etc[23, 24, 25, 26].

PM machines are categorized after the orientation of the magnetic flux they are carrying. There are three types that is available these are radial flux, axial flux and transversal flux. Radial flux permanent magnet machines is the most common variant but history reveals that earliest machines was axial flux permanent magnet (AFPM) machines, also called disc-type machines or pancake machines. In principal, each type of radial flux machines has its corresponding axial flux machine. In practice disc type machines are limited to the following three types[26]:

- PM dc commutator machines
- PM brushless dc and synchronous machine
- induction machines

The difference of a PM Synchronous Machines (PMSM) and a Permanent Magnet Direct Current (PMDC) with commutator machine is that the PMDC with commutator machine uses PMs to replace the electromagnet in the rotor. The PMDC and PMSM have almost the same structure but the difference is the operational field. For the PMDC the field is squared and for the PMSM the field is sinusoidal. Disc type IM's are of little interest today because of difficulties manufacturing the rotor[26].

In these days the AFPM machine has got a lot of attention at the university and in the industry because of the high torque density that this configuration gives. It is used in applications that has tight weight and size requirements[20].

A number of topologies are possible with the axial flux concept, some of these are[26]:

- single sided AFPM machines
- double sided AFPM machines
- with salient pole stator
- multi stage AFPM machines

The first two topologies are shown in figure 5.4 where 1–stator core, 2–stator winding, 3–rotor, 4–PM, 5–frame, 6–bearing, 7–shaft. As seen in this figure the AFPM is easy scalable by use of building blocks or modules. This makes it easy to double the rated output power by simply stacking two machine modules together, this gives a lot of flexibility and power in small spaces[20]. A single slotted and a double slotted machine is shown in figure 5.4.

The electromagnetic torque developed from a PMSM machine is given by numbers from experience and the easy equation given in 5.1[22, 27].

$$T = k \cdot D^2 \cdot L \tag{5.1}$$

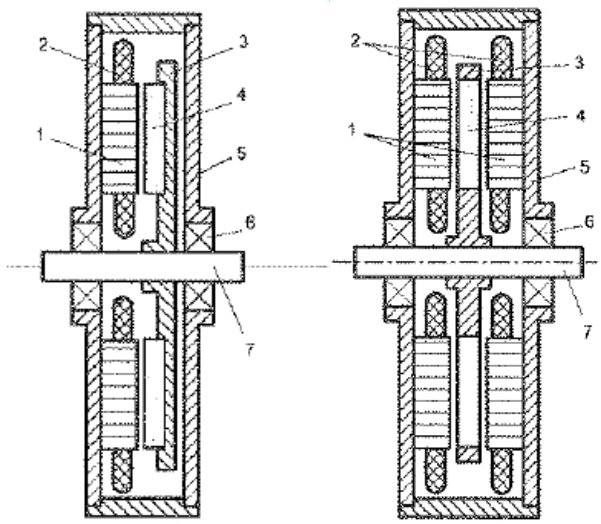

(a) Single-sided slotted machine (b) Double-sided machine with slotted stator and internal PM rotor

Figure 5.4: Basic topologies of AFPM machine

Where k is a dimensioning factor given from experience, T is torque, D is diameter, L is the length of the machine, P is Power and v is rotational speed.

5.1.4 Asynchronous versus synchronous

Asynchronous machines and synchronous machines are both AC machines with a rotating magnetic field. The stators can be said to be alike, while the rotor is different. In asynchronous machines currents are induced into the rotor, while a synchronous machine uses a rotating magnet.

The table in 5.1 has been made to ease the selection[22].

5.1.5 Choice of motor technology

As mentioned earlier the chosen motor technology needs to be small and compact, it should be easy to build and it must be possible to include a solution that makes the machine robust and tolerant for the harsh and cold subsea environment. It must also be possible to run flooded which was one of the objectives in this thesis without any problems, stated in chapter 1.2. Another important aspect is that the machine must not need a lot of maintenance, since this is difficult to do at 3000 meters depth.

	Asynchronous	Synchronous
Low rotational speed (High number of poles)	Seldom used because of the need for alot of magnetization current	Much used, e.g. slow rotating watergenerators
Slim stator	Result of lots of poles, get a ring shaped machine	Result of lots of poles, get a ring shaped machine
Winding configuration	Distributed	Possible with concentrated windings with possibilities for sectioning and pre-compaction of each coil
Machine length	Given by the diameter, ring shaped machine	Given by the diameter, ring shaped machine
Big airgap	Is not recommended specially if there is a lot of poles. Needs a lot of magnetization current	Not a problem, just use a bigger magnet
Speed control	Power electronics	Power electronics
Robust stator	Possible	Possible, a bit simpler because of higher polenumber
Price	Cheaper than synchronous machines. Possible to use mass produced machines	More expensive than asynchronous, but the price on NdFeB-magnets is falling and it is much less complex to assemble

Table 5.1: Choice of motor types flooded with water

The DC machine with communtators will not be suited for this type of applications since the brushes requires regularly maintenance, so the DC machine with communtators is not an option because of the cost of performing this kind of operations on 3000m.

As shown in table 5.1 a comparison between synchronous solutions versus an asynchronous solution was performed. A synchronous machine can use a high number of poles that can give a low rotational speed this can be very attractive for a direct drive solution where the motor is directly run on the nut that is attached to the screw. Another thing that is possible with the synchronous solutions is the possibility for concentrated windings and sectioning them, this can give a smaller stator which then again results in a small machine. Redundancy in the motors can be achieved by grouping the windings into two or more groups. The groups can then

operate the rotating machine alone. It is possible to design these groups to make the machine fully redundant; this means that each group of windings can operate the machine alone at with the decided power[22]. It is also possible to operate the motors at lower power but then it will use more time to perform the given operation.

Figure 5.5a shows an IM next to a PMSM, this picture illustrates the size difference. The PMSM is known for its small machines with high torque density and low weight. They can be used with a high number of poles, which makes them fault tolerant and redundant. The use of a permanent magnet instead of windings gives also an air gap between the rotor and stator, this air gap can be designed to be quit big, around 10mm. This airgap can be used be used to cool down the machine with water flowing in this airgap. Figure 5.5b shows how a PMSM can be formed where the water is flowing in the airgap and the PM is placed around the rotor[23].

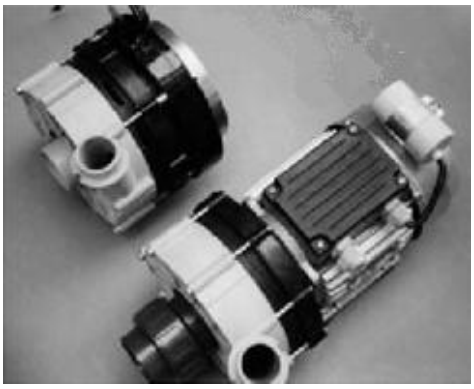

(a) IM versus PM

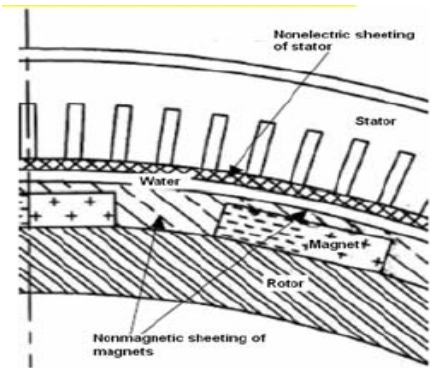

(b) Inside a PM machine

Figure 5.5: IM and PM machines

All of the motors that have been discussed can be used in the electric actuator, but the PMSM conforms clearly to most of the requirements that is given in chapter 3. It can be built small with possibilities for redundancy and fault tolerance, it is also possible to run the PMSM flooded which conforms to objective number two in this thesis. So the recommended machine type for an all electric actuator will be to use a PMSM with a coated PM for protection.

5.2 Calculation of motor size for the different solutions

This section will estimate the sizes for a PMSM motor that can be used in an electric actuator. The calculations are just an estimate and when the design phase starts the dimensioning factor that has been used will be change depending on the outer environment, mostly temperature, and also how efficient the machine needs to be. The calculations are performed without any failsafe solution unless it is specified.

In this thesis there are two diameters that are used. These are maximum diameter and active diameter. The maximum diameter is the size that the entire machine can be with everything; this means the rotor, the stator the protection layers are all included. The active diameter is the size of the rotor including the airgap, this means that the active diameter must be approximately half of what the maximum diameter is so it is possible to incorporate the stator and the protection that is needed around. This is illustrated in figure 5.6. The maximum length and the active length will be almost the same but a protection layer is required around.

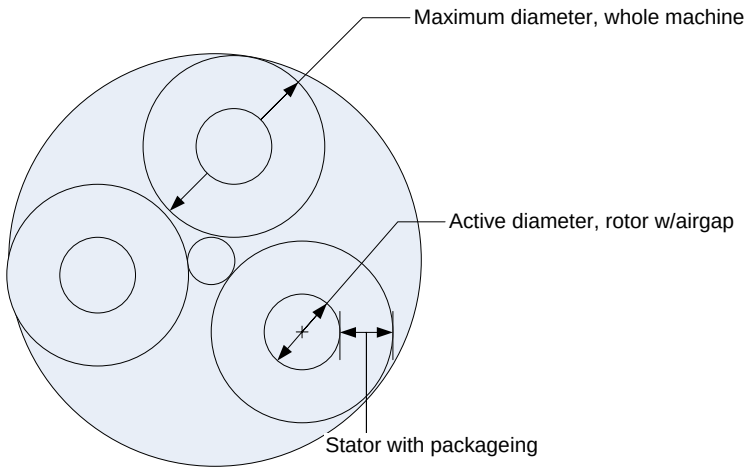

Figure 5.6: Number of motors

The electromagnetic torque developed from a PMSM machine is given from the easy equation 5.2 and by numbers from experience [22, 27].

$$T = k \cdot D^2 \cdot L \tag{5.2}$$

k is the dimensioning factor, T is torque, D is diameter, L is the length of the machine. k is a factor that can be used to estimate sizes of PMSMs. This number is usually not included in books or articles that describe these topics and where they are included are the numbers probably old because of the increasing growth of the electrical machine industry the last decay. In this thesis the dimensioning factor k was obtained from a motor designed by SmartMotor AS that produces special designed PMSMs [22].

$$P = \frac{T \cdot \pi \cdot v}{30} \tag{5.3}$$

The maximum power that is needed to crack the valve open at surface with full pressure in bore, which is the worst case requirement described in chapter 3 for the

motor, is calculated out from equation 5.3, where P is Power, v is rotational speed and T is torque.

This power is used to estimate the size of the motors. In physics, power is the rate at which work is performed or energy is transferred. The next sections will show the estimated motor sizes. The calculation has been done for three different solutions with three different types of screws. Also some considerations and options regarding redundancy in the motors has been calculated and shown. All the calculations are enclosed in appendix C. The mechanical input data that is used in the calculation are taken from [1] also summarized in chapter 4. The different solutions that are described in chapter 4 are:

- Direct drive
- Gear solution 1
- Gear solution 2

5.2.1 Direct driven

The direct driven solution is shown in figure 4.1a. This solution is the simplest and all space around the stem can be used for a big motor. This means that the maximum diameter for this solution is the entire diameter shown in figure 5.6 which will be approximately 0.55 meters. The active diameter for the motor can then be half of this which will be around 0.25 meters; this will give enough space for the stator and protection that is needed. As table 5.2 is showing a solution with an acme

Input data direct driven			
	Acme screw	Ball screw	Roller screw
Speed, rpm	90	90	90
Torque, Nm	2847	747	660
Maximum diameter, m	0.53	0.53	0.53
Size calculations direct driven			
	Acme screw	Ball screw	Roller screw
Power, W	26840	7049	6220
Active Diameter, m	0.25	0.25	0.25
Active Length, m	0.68	0.18	0.16

Table 5.2: Size of motor for a direct driven solution

screw will not be possible. The active length is longer than the maximum length possible. The differences in sizes for a motor using a roller screw or a ball screw are very small, so both these solutions will be possible and fit with the requirements that have been stated. The roller screw type can handle very high forces and is the preferred solution if a direct drive should be chosen shown in 4.1.1 and in [15].

An option for a redundant motor system is shown in 5.3 option 1. This option requires that the windings are sectioned inside the stator. The calculation is just performed with the roller screw solution. As seen from table 5.3 a redundant motor will be designed to give 14000W. As seen from the table it will be possible to have one redundant motor using a roller screw in a direct drive solution, the length of the machine will be inside the size limitations.

	Option 1	Option 2
Power, W	14000	8307
Speed, rpm	90	90
Torque, Nm	1418	881
Diameter, m	0.25	0.25
Length, m	0.36	0.21

Table 5.3: Options for a direct driven solution

The main problem with a direct drive solution is that the possibility for a mechanical failure between the nut and the roller screw can be high; this is because of the high torques and forces that this part of the system will experience. If this type of failure occurs it will not be possible to do anything other than pull the entire actuator and replace it. This is a very expensive operation and the oil companies try to avoid solutions where this can happened.

Option 2 in table 5.3 shows a calculation where a spring is used for failsafe. It is possible to use a spring as a failsafe and still be inside the given size limitations.

Another possibility is to use two motors connected after each other. Seen from the size of the active diameter in table 5.2 there will be room, if a roller screw is chosen. The length of the two motors($2 \cdot 0.16 = 0.32m$). This will give a possibility for redundancy if the one of the motors fail. A difficult aspect here is how the mechanical part can be solved, because it will be two nuts on the same screw.

5.2.2 Gear solutions

The system design of a gear solution is shown in figure 4.1b. Here, small motors will be used connected through a gear, instead of one motor directly connected on the nut that was shown in the previous section. A solution with three motors placed around the stem is shown in figure 5.6. The mechanical calculation and design of the gears is summarized in section 4.1.1.

5.2.3 Gear solution 1

Gear solution 1 is shown in figure 4.3, this gear will be small and compact. The mechanical input data is shown in the top part of table 5.4, the numbers that are

given are for each motor. This means that to crack open the valve each motor must give 50Nm if a ball screw solution is used. Also seen from the input data is that the active diameter must be around 0.06-0.07m which is approximately half of the maximum diameter, this is where middle point of the rotor must be placed to fit with the gear.

A solution with an acme screw will not be possible since the length of the motor is outside the limits. Since the gears uses approximately 0.20m of the maximum length of the actuator the motors can not exceed 0.23 meters in length. A roller screw solution will again be the best choice to get the motors to be inside the limitations and handle the forces that will be working in the system. This solution will have a active diameter of 0.07 meters and a length of 0.14 meters.

Input data for gear solution 1			
	Acme screw	Ball screw	Roller screw
Speed, rpm	520	520	520
Torque, Nm	188	50	44
Maximum diameter, m	0.12	0.12	0.12
Size calculations for gear solution 1			
	Acme screw	Ball screw	Roller screw
Power, W	10256	2698	2375
Active Diameter, m	0.07	0.07	0.07
Active Length, m	0.58	0.16	0.14

Table 5.4: Size of motors using gear solution 1

In table 5.5 three different options are shown using gear solution 1 with a roller screw. The first option gives a solution where all the motors are fully redundant. This means that if one of the motors fails the two others will still operate the valve according to the specification. It was found that this option is not possible since the length required by the motors exceeds the available length of 0.23 meters.

Option 2 and 3 in table 5.5, have been calculated with a higher rotational speed. This is to show that if the rotational speed is increased the size of the motors decreases. In option 2 the rotational speed of the motor was increased with the same amount of power for operation. As the estimate shows the motors will be smaller and it can be possible to include more of them. Option 3 has been calculated with a higher rotational speed and redundant motors. The result shows that when the rotational speed is increased it will be possible to include a fully redundant motor system that fits with the given size limitations.

The last option is calculated with a spring as a failsafe solution. The results shows that it will be possible to have a fully redundant motor system if a spring solution is used using a rotational speed around 800rpm. If the rotational speed is 520 rpm

a redundant system will not be possible inside the size limitations with the spring as a failsafe.

	Option 1	Option 2	Option 3	Option 4
Power, W	4800	2400	4800	3030
Speed, rpm	520	800	800	520
Torque, Nm	88	28	58	55
Active Diameter, m	0.07	0.07	0.07	0.07
Active Length, m	0.27	0.08	0.17	0.17

Table 5.5: Options for gearsolution 1 using a roller screw

5.2.4 Gear solution 2

Gear solution 2 is shown in 4.4. This is a more advanced gearing system and it is larger and heavier. This gear is 0.3 meters long. The motors must then not exceed 0.17 meters of length when protection is included. It can be seen from the estimates in table 5.6, that the acme screw not will fit into the actuator. Since the maximum length is 0.17 meter and the active length without protection for the acme screw is 0.17 meter.

Input data for gear solution 2			
	Acme screw	Ball screw	Roller screw
Speed, rpm	900	900	900
Torque, Nm	112	30	26
Maximum diameter, m	0.17	0.17	0.17
Size calculations for gear solution 2			
	Acme screw	Ball screw	Roller screw
Power, W	10574	2782	2448
Active Diameter, m	0.1	0.1	0.1
Active Length, m	0.17	0.05	0.04

Table 5.6: Size of motors using gear solution 2

In table 5.7 the redundant solution with a roller screw is given. This option will give very small motors, with 0.1 meter in active diameter and 0.08 meter in active length.

	Option 1
Power, W	5000
Speed, rpm	900
Torque, Nm	94
Active Diameter, m	0.1
Active Length, m	0.08

Table 5.7: Options for gearsolution 2 using a roller screw

5.3 Recommended motor solution for an electric actuator

The electric actuator has very strict size and weight requirements as stated in chapter 3. This means that the system that is going to generate the forces to operate the valve must be small. This chapter has been looking at different types of motor technologies; the motor technology that was chosen for this type of application was a PMSM. This is because of the high torque density, the possibility for the motor to run flooded with a coated PM and also possibilities for redundancy and fault tolerance that can be incorporated in these types of machines.

This chapter has also estimated sizes of the PMSM for different mechanical solutions looked at in [1]. It was found that an acme screw solution is not a good solution in reference to the motor sizes the force that was required to operate the valve with a acme screw was to high. The estimates shows that using an acme screw the sizes of the motors will not fit into the actuator.

It was also decided that gear solution 2 not was a solution that would be further investigated. The problem with this gear was found to have lots of small parts that could cause failures. Another thing that came up was that this gear would be heavy, which will make the gear difficult for the ROV to replace.

The estimates show that a ball screw solution or a roller screw solution does not give any big differences in how large the motors becomes. It was found that the roller screw could handle more mechanical tensions and forces than the ball screw. So in the proposed solution a roller screw type will be recommended.

Choosing between a direct drive solution or gear solution 1 comes down to how the mechanical solutions are solved. Both these options are possible inside the given weight and size requirements. Table 5.8 shows the sizes and numbers for each of these solutions. A gear solution with three motors will give possibilities for a more available system (because of higher redundancy) than a direct driven one. The reason for this is that one or more of the motors used in gear solution 1 can fail/burn and the actuator still will be operational while for a direct driven solution it will just be one motor.

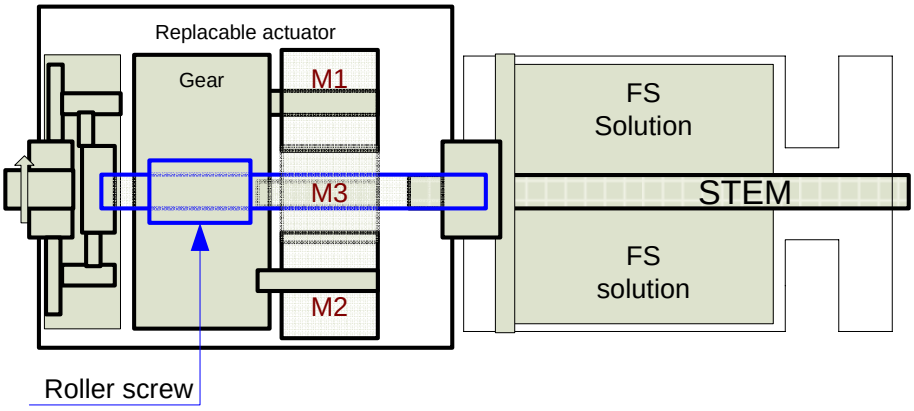

Figure 5.7: Recommended actuator design

	Direct driven	Gear solution 1(Option3)
Maximum diameter	0.45	0.45
Maximum length	0.5	0.5
Gear size	Inside rotor	approx 0.20m
Number of motors	1	3
Active diameter	0.25	0.07
Active length,	0.16	0.17

Table 5.8: Recommended solutions

The recommended electrical actuator design is shown in figure 5.7. The actuator can be built as one building block, with standard mechanical and communication interface. The entire building block can be replaceable, which was one of the requirements from the FDS. The building block configuration will make them easier to install, maintain and replace. Three motors driving a gear were found to be the best solution for the electrical actuator. The selected electrical machine technology for the electrical actuator was PMSMs. These motors can have inbuilt redundancy by grouping the windings inside. This will make the actuator highly available.

PMSMs can also be run flooded with sea water which was one of the objectives for this thesis. The motors will be able to crack open the valve at surface with full pressure in bore which gives the worst case load.

The estimated sizes for the motors will be 0.12 meters in diameter (0.07 meters active) and the length will be around 0.19 meters (0.17 meters active). The gear will be approximately 0.20 meters. This will give 0.12 meters of free space where presumable motor drives can be placed.

If a spring is chosen as a failsafe solution the recommended design will be the one described above.

Chapter 6

Motor driver control system

6.1 Control of the motors

6.1.1 Motor driver theory

Electrical machines can be operated two ways, either as a generator or as a motor. Depending on the torque-rotational speed region it is operated. The torque-rotational speed regions can be described in 4 quadrants shown in figure 6.1. A machine can be operated in one, two or four quadrants depending on the ratio between torque and the rotational speed. When the machine is operating like a motor the rotational speed is positive and the machine torque is working on the load. This means that the motor is working inside quadrant 1 and 3 in figure 6.1. If the machine is under braking it will work like a generator, and the power is delivered back into the source. This means that the motor is working inside quadrant 2 and 4 in figure 6.1. What type of operation the machine will experience, will reflect what type of converter and driver electronics that should be used[28].

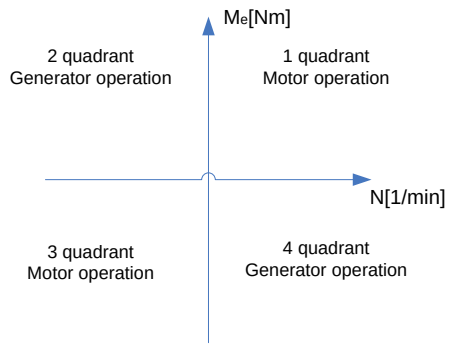

Figure 6.1: Operation of electrical machines

The main components in a motor drive system is shown in figure 6.2.

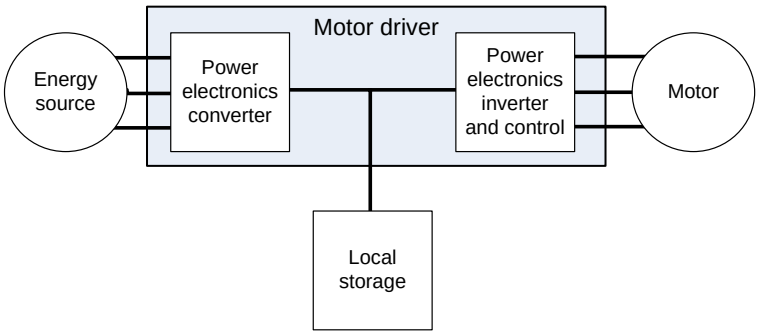

Figure 6.2: Motor driver system

Source and storage

The source can be the power network AC or DC, batteries, diesel engines or other types of energy sources. In a subsea production system this will be a high voltage AC or DC line connected to a platform, an FPSO or to a land facility through an umbilical. The system can also have a local storage using batteries or super capacitors. This can be used for failsafe or in case of loss of power it can be used to hold the system operational.

Power electronics

High frequency switching equipment can convert the high power from the source to a usable power that the motors can use. The power electronics is used to convert the high voltage AC or DC to a usable DC voltage. This DC voltage can be used to load the local storage or can be used directly by the motor through the inverter circuit that makes the voltage to a variable frequency and magnitude for the motor by using switches.

An ideal switch used in converter and inverter on a motor drive should ideally[16]:

- Block unlimited sizes of voltages in both directions with no currents through the component when it is off
- Conduct unlimited sizes of currents with zero voltage drop when on
- Switch from off state till on state and vice versa infinitely fast
- Do not conduct current in reveres direction when on

Power semiconductors are used as switches, the power semiconductor devices that usually is applied in industrial applications are[29]:

- diodes
- Thyristors
- Gatet turn-off thyristors (GTO)
- Bipolar Transistors (BT)
- Insulated gate bipolar transistors (IGBT)
- MOS field effected transistors (MOSFET)

All the listed devices, except the diode are working in switching state. When the devices switch it is desirable to have a low voltage drop when the device conducts, this is to limit the losses. When the device is blocking with high blocking voltage, low currents are desirable; ideal zero. In a short time from when the switch is conducting to when it blocks (or vice versa) it will act like a resistor and dissipate power. The loss that these currents and voltages give are called switching losses. The switching losses are proportional with the switching frequency this means how fast the devices is operated on and off[28].

In electronics, a diode is a component that restricts the direction of flow of charge carriers. Essentially, it allows an electric current to flow in one direction, but blocks it in the opposite direction. Thus, the diode can be thought of as an electronic version of a check valve. Circuits that require current flow in only one direction typically include one or more diodes in the circuit design. The symbol is shown in figure 6.3a. When the diode is turned on, it reacts almost like a ideal component, since it is very fast compared with the power circuit. When the diode is turned off, a phenomena called reverse recovery occurs. Negative currents will flow through the diode until the energy stored inside the diode is released and the diode starts to block. The time this happens, high voltages can occur that gives unwanted inductances and this is the main advantage in power electronics[17].

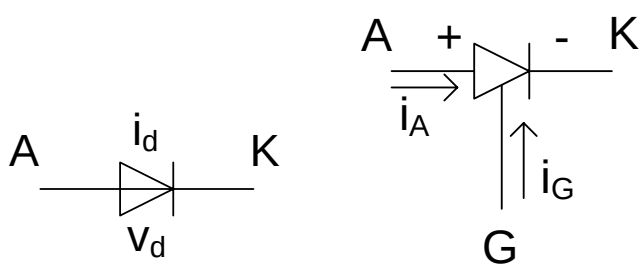

(a) Diode (b) Thyristor

Figure 6.3: Power electronics

The symbol for a thyristor is shown in 6.3b. The difference from a diode is that the thyristor is blocking also in the forward direction until it is triggered through the gate or until the voltage exceeds a value (turn over current). The general use of a

thyristor is to trigger it through the gate. It is enough with just a pulse and it will stay open. The thyristor is turned off by forcing the voltage across the thyristor to zero. It is also possible to switch it off by making the anode current fall below the holding current. To make the thyristor stop conducting again when voltage is applied in the forward direction a negative voltage across the thyristor must be used for a short period of time. This is called the circuit commutated turn off time[28].

Another category of switches are the controllable switches; these can be switched on and off by a control signal.

The GTO is a modification of the thyristor. It can also be turned off by putting out a negative gate current. The GTO has been the dominating controllable switch for big motor drives since the beginning of the 80s. The problem with the GTO is that it requires a lot of circuits to protect it and also the control circuit must be quite large to keep control over the gate-current[16].

MOSFETs are generally used for low performance machines where high speed switching is necessary. It can switch up to 100 kHz. The MOSFETs are voltage regulated, this means that it can be turned on and off by using positive and negative voltages on the gate respectively. This is one of the advantages with MOSFETs and it makes the control circuit smaller and more compact and it is also easier to control the switching voltages that occur. This again means that less protection is necessary and smaller motor drivers can be built[16].

IGBT is a component that is a combination of a BT and a MOSFET. The IGBT has a lower conduction voltage drop but is still voltage driven. This component is dominating devices in the industrial motor driver's up to the MW area. The IGBT is starting to compete with the GTOs when it comes to losses and also the switching time is starting to come considerably down[16].

Control the power electronics

To control the voltages in a motor drive system, control logic must be used. The development in this area has been increasing the past 20 years and most of the position control, current control, rotational control and protection is digital implemented in a microprocessor, but analogue circuits are still used where faster and higher protection is necessary. The processors that are mostly used today are microcontrollers. A microcontroller is a microprocessor with extra devices like counters, analogue to digital (AD) converters, high performance digital signal processors (DSP) etc. [30]. The thing with microcontrollers is that they are easy to program and changes in software can be done smoothly and efficient. Disadvantages with a microcontroller are that it has to do everything sequentially and it has limitations in memory. The limitations in microcontrollers can be solved by using other types of equipment instead, Field Programmable Arrays (FPGA) are one type[31]. The main thing with

a FPGA is that it can do parallel processing. It also solves everything with a higher time resolution than microcontrollers[26].

6.1.2 PMSM drivers

A solution of a motor driver system used on the recommended PMSM from chapter 5 is given in figure 6.4. A fixed AC supply is coming from the electrical power unit to convert this fixed supply some type of equipment must be used. Either a diode bridge rectifier or a voltage source converter pulse width modulation (PWM) rectifier can be used to obtain a fixed DC voltage. If a diode bridge is used as a rectifier it will not be possible to operate the motor in all the operational quadrants described in above, the reason for this is that the diode is blocking in one direction. When the AC is rectified to a DC voltage a solid state converter (SSC) as shown in figure 6.5 can be used to inverted it into a three phase AC voltage of variable frequency and magnitude. The three-phase inverter in figure 6.5 has six power electronic transistor switches. The power transistors can be IGBTs or MOSFETs described earlier in this chapter. The power transistors are switched on and off at relative high switching frequencies, that can be around 1kHz-20kHz or even higher[28, 26]. Depending on this switching the frequency and magnitude of the different phases into the motor is given.

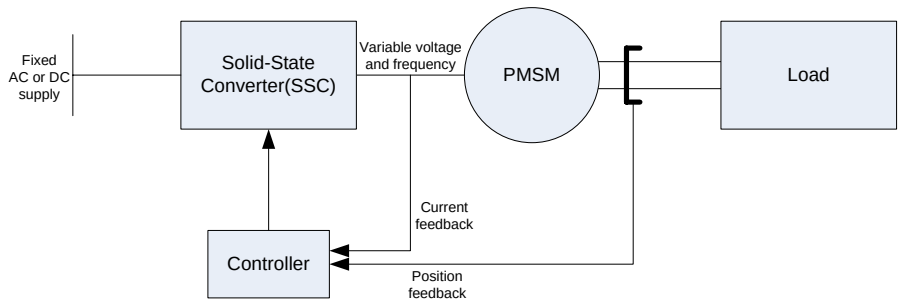

Figure 6.4: PMSM driver

The information the controller needs to control the PMSM is the size of the current and the position of the rotor, the controller then uses this information and controls the supply voltage and frequency through the SSC. The speed of the rotor has a direct relationship with the frequency of the phase voltages and currents of a PMSM machine. There is two ways of getting the position of the rotor these are[26];

- Sensor position control
- Sensor less position control

Sensor position control is often using high resolution sensors usually resolvers. Since they are robust they can be used in harsh environments. Integrated and analogue

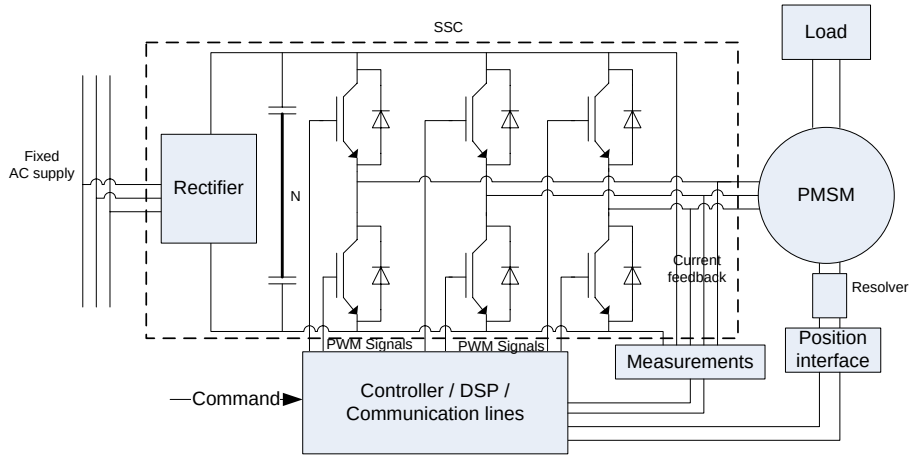

Figure 6.5: Solid State Converter in the PMSM driver

circuitry is necessary to interface these resolvers. It can be difficult to incorporate a sensor position control into an actuator because of the electronic sensor that is needed. Sensorless position control can be a solution. Most of sensorless position control uses measurements of the voltage or the current of the machine. This information can be obtained from inside the SSC. When using these measurements with a model of the machine it is possible to predict the position of the rotor. State observers, filters and other calculations are used to estimate the mechanical position of the rotor this is described closer in [26].

Housing of motor driver cards

In a new system the motor drive electronics for the motors in the actuators can be put two places, either in the SCM or it can be integrated in the same housing as the actuator itself. As described in chapter 2.3.1 the ISO standard requires that the electronics should be packed in enclosures filled with nitrogen gas.

Today most of the motor drivers are included in a different housing than the motor connected with power lines. When the spaces are small new ideas have to be developed to reduce or limit the space that the driver is using. Research is being carried out to try to incorporate the driver into the housing of the motor[32]. This research can be very useful for an application like the all electric actuator since the spaces for the motor drivers will be very small.

The concept of integrated modular motor drives provides a promising approach by integrating motor drive electronics into the machine housing by modularizing the machine stator and the power converter[32]. As figure 6.6 illustrates, the power

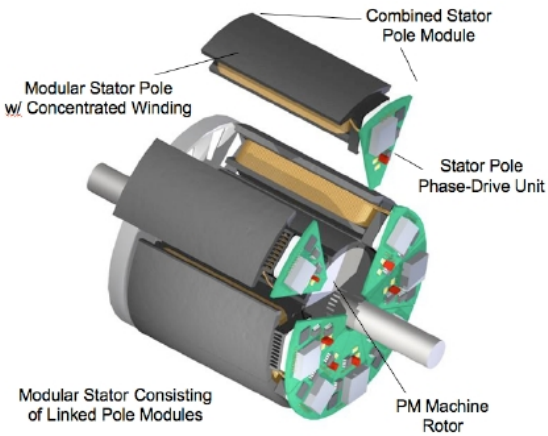

Figure 6.6: Integrated Modular Motor Drive concept illustration

converter included in the housing of the motor. Integration of the machine and the drive provides a number of advantages, especially at system level.

A integrated drive solution will give advantages like[32];

- reduced volume
- reduced weight
- less cables
- reduced chances for high radiated EMI levels and winding over voltages because of long machine cables
- minimized drive system cost and complexity
- no need for separate housing for driver electronics

6.2 Motor driver control system

When developing layouts for a future control system on a x-mas tree many things need to be considered. ISO 13628-6[4] has stated some of aspects that need to be considered when carrying out this type of engineering

> During front-end engineering, the possible impact on control system functionality and infrastructure related to the following items shall be considered:
> - flexibility with respect to production scenarios;
> - optimization with respect to operation;

- optimization with respect to cost-effective installation;
- optimization with respect to phased production development;
- flow assurance;
- project execution time;
- life cycle cost [component cost (capex), installation cost (opex), operation/maintenance/intervention cost (opex)].

Operational philosophy, installation sequences and possible operational challenges shall be evaluated during front-end engineering.

In addition to this, oil companies also require that the control system should be operational when failures happen. No 'single point of failure' should stop the system and everything should be fully operational producing hydrocarbons.

Here, two different options for layouts controlling the actuators in an all electric x-mas tree in the future all electric system are proposed. The layouts need to conform to the standards and oil company requirements, which is stated in the beginning of this chapter.

To make this driver control layout, some assumptions must be made, these are:

- the solution of actuator recommended in chapter 5 is used.
- the motor driver used is described in 6.1.2 for the PMSM and is using position less sensoring over the rotor
- Canbus is used for communication; the reason for this is that this communication protocol should be used for the downhole power and communication interfaces decided by the IWIS panel
- power and communication is distributed to the x-mas tree from an umbilical with redundant conductors A and B
- power and communication is transported with redundancy in one cable

This section will look at the driver network inside the x-mas tree. It is not considering

- entire field layout, this has been looked at in [11] and [33].
- chemicals and scale prohibitor structures
- routing of cables

Other things that are not considered in the layout design will be stated where this is applicable.

6.2.1 Distributed control layout

A distributed driver control system is shown in figure 6.7. A distributed solution will consist of actuators without actuator control inside. The pressure and temperature

sensors for monitoring, downhole equipment for monitoring and control, and future equipment, which can be vibration control on the tree, gravity sensors, magnetic sensors, seismic sensors etc has not been looked at in any detail. All power and communication is distributed from the SCM out to the equipment in the solution shown. The SCM will consist of two SEM's for redundancy, all electronic that is needed for control over the tree is placed in these redundant boxes.

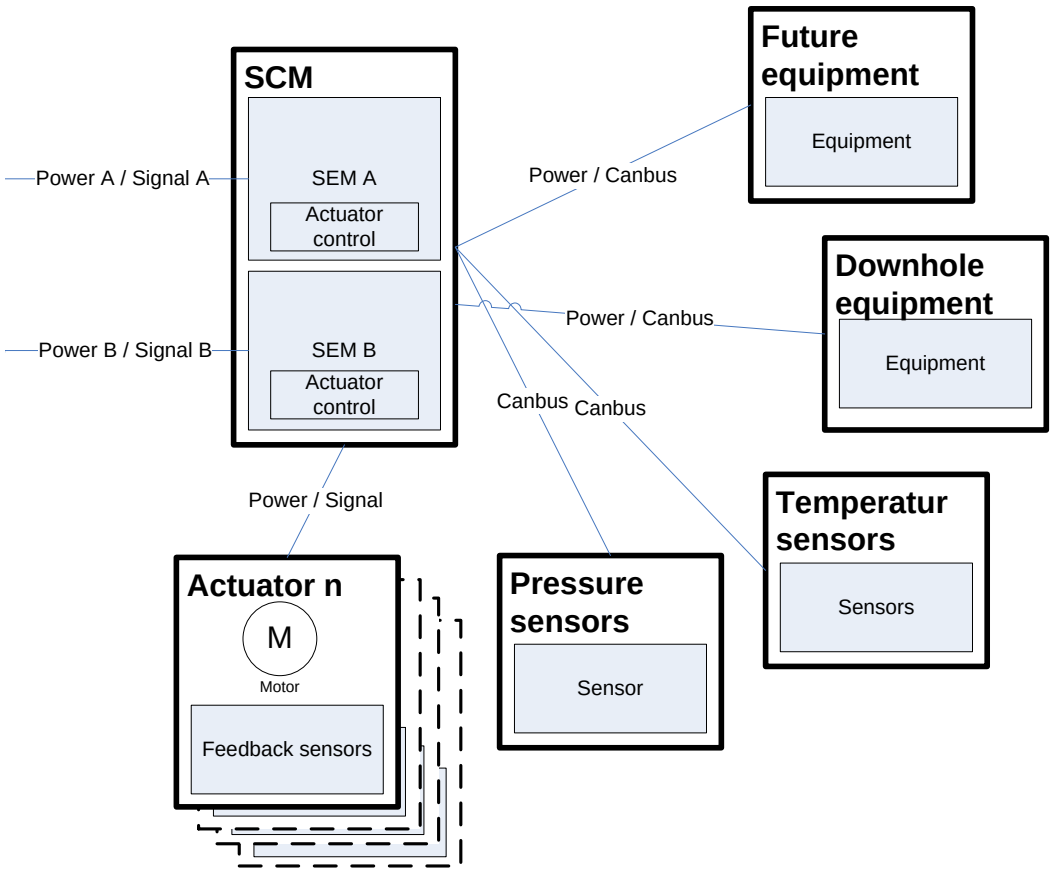

Figure 6.7: Distributed motor driver control layout overview

A block diagram of a SEM is shown in figure 6.8. The SEM is connected to one of the power lines and one of the communication lines from the umbilical. It will consist of a Power System Unit (PSU) which converts and delivers power to the connected systems, a modem which receives and send signals up through the umbilical to topside, a processor (computer) which will control and monitor the x-mas tree and also handle the signals from the modem and an actuator controller which will control the functions of the actuator.

The actuator controller will consist of different blocks, these are; a power block distributing the power to the drivers and the other equipment on the controller, a

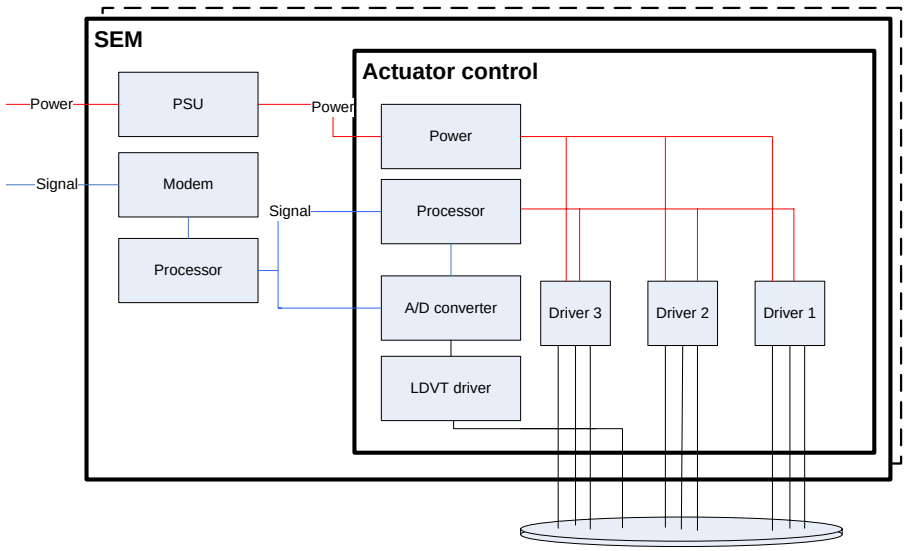

Figure 6.8: Distributed motor driver control layout SEM

processing unit which will compute the position of the rotor, the actuator position and synchronising the drivers, a Linear Variable Differential Transformer (LVDT) driver which will be used to get position of the stem and an A/D converter that will convert the analogue signal to a digital signal. The actuator controller will also include three drivers for control over the three PMSM's in the actuator. Each driver will deliver a three phase AC voltage to each motor. This means that the cable from the SEM to the actuator must have at least 9 conductors that are screened and separated from each other, three for each motor and also some signal conductors for the communication with the feedback sensor.

Since all the control of the actuator is put inside the SEM, no electronic components will be in the actuator housing. The only thing that the actuator will have is a bundle of lines connected inside. The actuators will be pressure compensated which means that the feedback sensors must handle high pressures. To get position of the stem, some type of analogue sensor that can handle high pressure must be used. One type of such sensor is a LVDT[34]. In the solution shown in figure 6.9 a galvanic connection is used inside the actuator between power line A and B. A solution of which of the lines that delivers power to the motors and how to solve the open circuit issues is not considered in this thesis.

Advantages with a distributed system are that all the control logic is in one canister inside the SCM. This means that the SEM's used today is possible to use with some modifications. The actuator controller card can be made with standard communication interface with a defined command structure which can be put into any electronic connection.

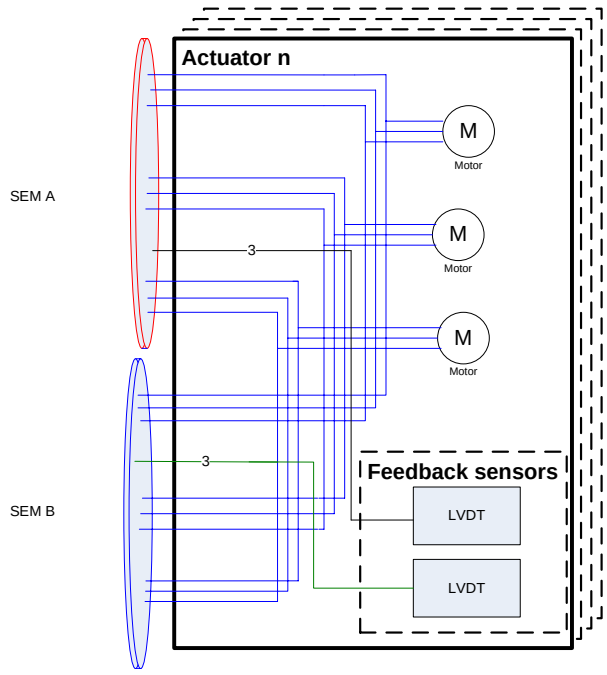

Figure 6.9: Distributed motor driver control layout actuator

Disadvantages with a solution like this are the amount of conductors needed inside the cable between the SEM and the actuator. Connectors that can connect all the conductors to the actuator are difficult to find, specially wet mate connectors which will be needed. Another thing that can be difficult is making this solution with no 'single point of failure', because of the structure inside the SEM. Two cables from each SEM to each actuator are needed. This will make the installation process longer and also the need for more parking plates for the cables must be solved. The aspect of finding failure can also be hard with this type of solution. If the motors in the actuator are not working is the fault in the electronics in the SCM or is the fault in the actuator. This means that if the fault is not found, both the SCM and the actuator must be replaced.

6.2.2 Integrated control layout

An integrated driver control layout is shown in figure 6.10. An integrated solution will consist of actuators with actuator control inside to control the motors. The pressure and temperature sensors for monitoring, downhole equipment for monitoring and control, and future equipment which can be vibration control on the tree, gravity sensors, magnetic sensors, seismic sensors etc has not been looked at in any detail. All power and communication is distributed from the SCM out to the equipment in the solution shown, but a possibility with an integrated solution is using a power

distribution center that delivers power to the equipment without going through the SCM as [33] describes.

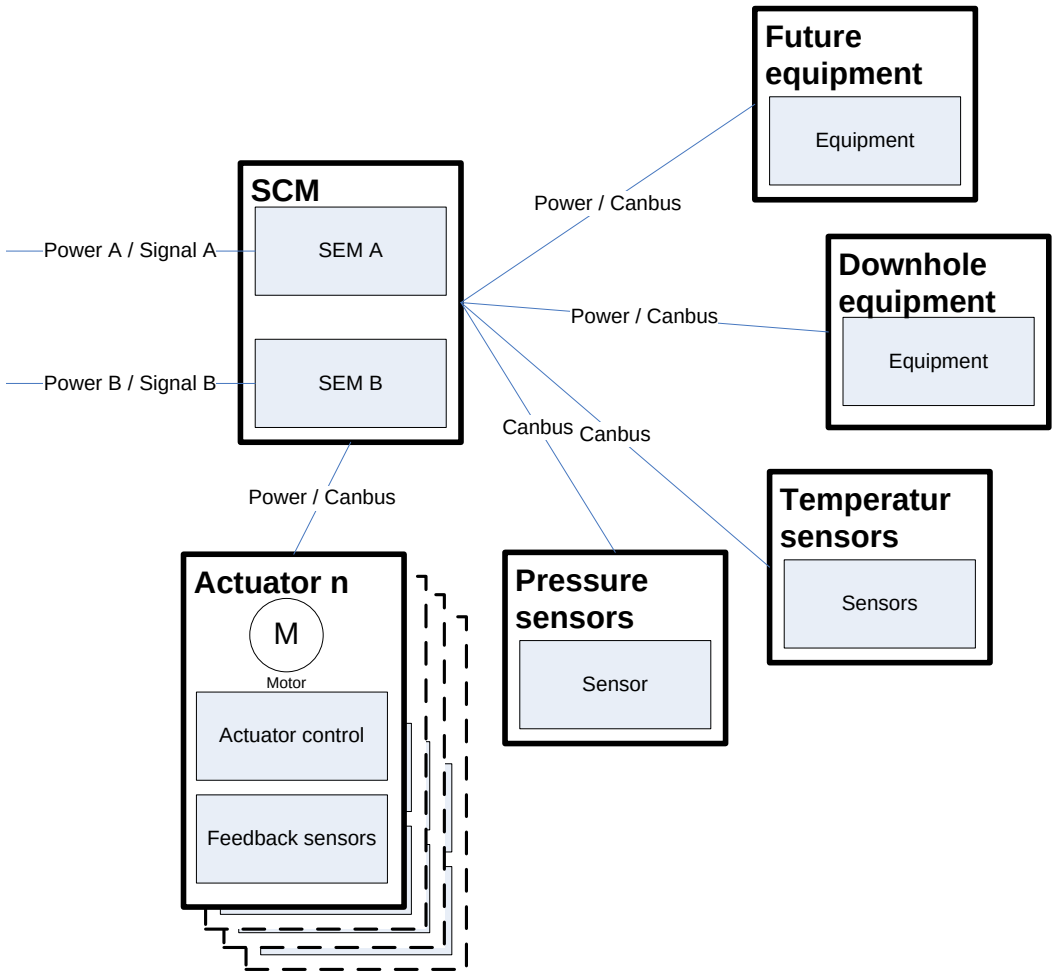

Figure 6.10: Integrated motor driver control layout overview

The SCM will consist of two SEM's for redundancy. Comparing the distributed solution with the integrated solution it can be seen that the actuator control is moved from the SEM to the actuator itself. This is the main difference of the two solutions.

A block diagram of a SEM is shown in figure 6.11. The SEM is connected to one of the power lines and one of the communication lines from the umbilical. It will consist of a PSU which converts and delivers power to the actuators. Since the control over the actuator is moved, only one power conductor is needed if DC is used, three if AC is used. The SEM will also have a processor for processing data, this processor will communicate with the actuator control module into the actuators through a

canbus interface. The modem will receive and send signals up through the umbilical to topside.

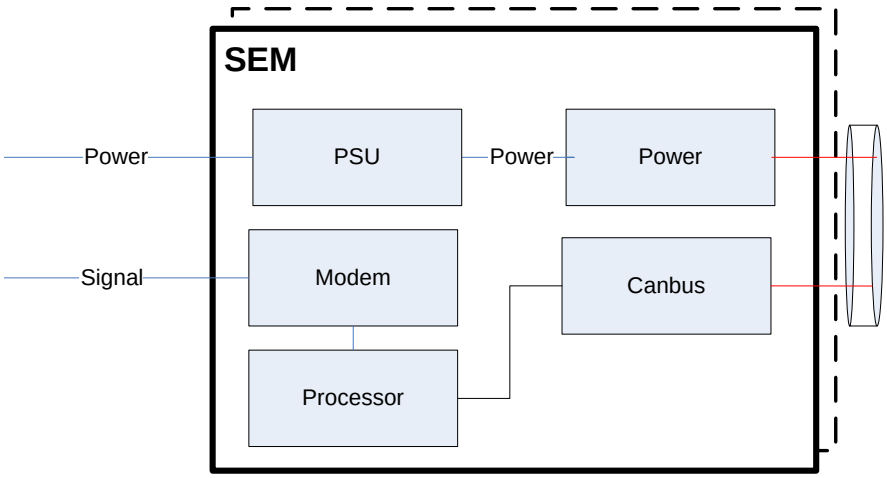

Figure 6.11: Integrated motor driver control layout SEM

The control over the actuators is now put inside the actuator itself. The motor drives and control circuits must be packed according to what was defined in chapter2.3.1. Figure 6.12 shows a block diagram of the actuator. Seen from the figure the power A and B, and Canbus A and B are connected directly to the motor drives. How the solution inside the motor drives circuit is solved has not been considered. Considerations around how to connect the power supplies and how the communication between the drivers is solved must be considered. As seen from this drawing all the drivers are stand alone units. This will make the system very redundant since each motor can be designed to operate the valve alone. Another thing in reference to this is that if something happens with one of the phases from the motor driver to the motor, the motor will still operate because of redundancy inside. Many types of feedback sensors can be used since the housing of electronic is inside the actuator itself.

Advantages in with this solution are that it the actuator itself will be a building block in the system. It will be one component with one standard interface for communication and power. This will make it flexible and it can be sold separately. Another advantage is that it does not need too many conductors in the cables from the SEM to the actuator, this reduces cost. Since the actuator and electronics is included in one housing everything is easy to replace. If a failure has happened it will be easy to replace the entire actuator with electronics and replace it with a new working one without loosing control over the x-mas tree. An integrated solution will

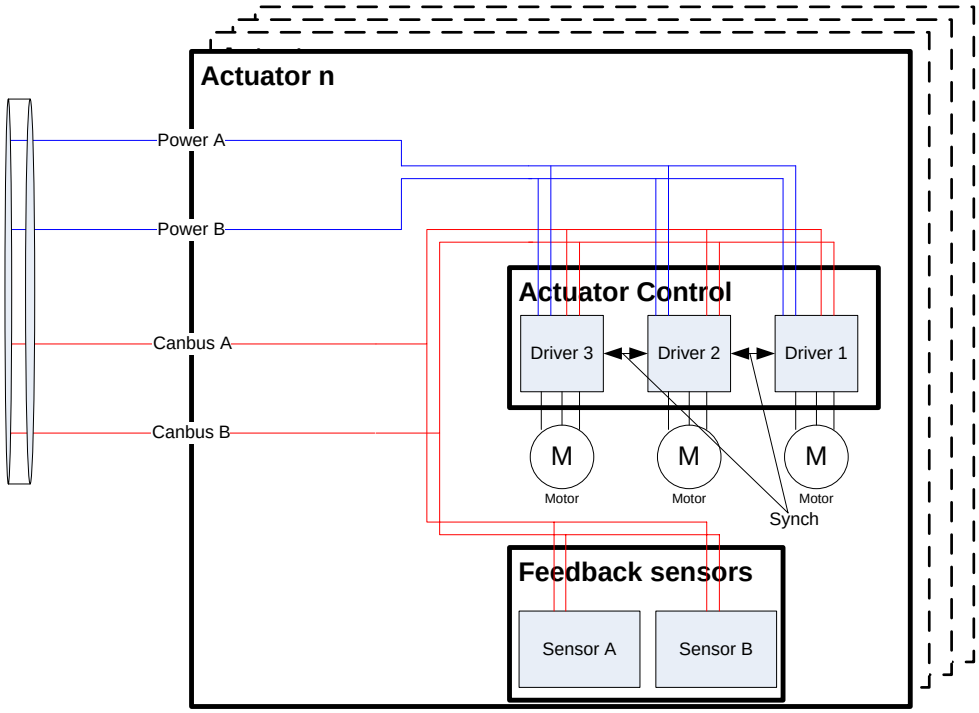

Figure 6.12: Integrated motor driver control layout actuator

make the SEM's smaller. This will make it easier to build and control since most of the control structures are outside with standard interfaces.

Disadvantages with the integrated system are that it needs 1atm housing for the electronics. This means that a x-mas tree system with six actuators must have six housings of electronics at 1atm.

6.3 Recommendation for x-mas tree control layout

Two different motor driver control layouts have been evaluated in this chapter. The standard said that when doing this type of engineering a flexible layout, with a cost effective installation process (fast/easy), flow assurance (high redundancy/replaceable), expandable, short project execution time and with low cost. The other important requirement was that the system must not have any 'single point of failure'.

To get a system that is conforming to all the requirements, it is concluded that the only feasible solution will be an integrated motor drive control system. An integrated motor drive control system will have, using the actuator from chapter 5, redundant motors, redundant drivers, redundant power, redundant communication where no 'single point of failure' can take the system down. Since the actuators are built like

building blocks with standard interfaces that are fully replaceable it will be easier to install, maintain and replace. Also, since the actuators just need one cable with four conductors two power and two communications the amount of parking plates for the cables on the x-mas tree are reduced. Since the electronics is moved from the SEM this will be a smaller and cheaper to build and reduce the cost, and also since the SEM is smaller other type of equipment can be included for expansion.

Also the possibilities to route the power through a distribution center rather than the SCM will make this option flexible.

An integrated motor drive solution is shown in schematic 2 in appendix B. The SCM will have fewer connections than an electro hydraulic system which is shown in schematic 1.

The recommended solution for an all electric x-mas tree with electrical actuators will be an integrated motor drive shown in schematic 2 in appendix B and also described in this chapter. It will conform to the standard and the requirement that the oil companies has stated.

Chapter 7

Conclusion

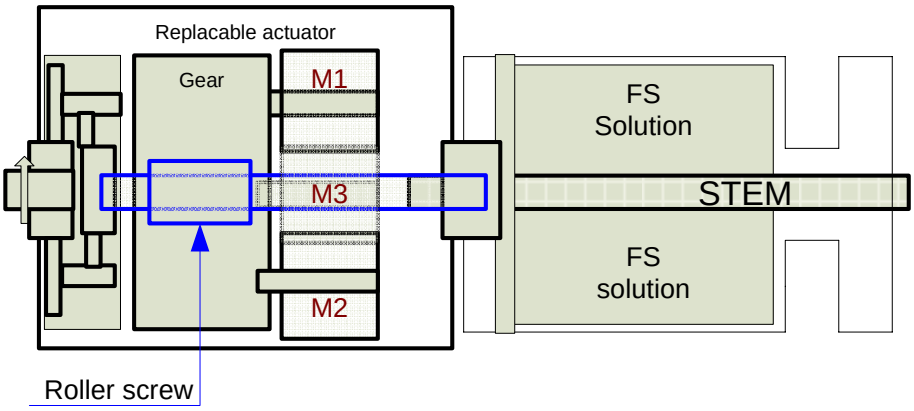

Figure 7.1: Recommended actuator design

The recommended electrical actuator design is shown in figure 7.1. The actuator can be constructed as one building block, with standard mechanical and communication interfaces. The entire building block will be replaceable, which is one of the requirements from the FDS. The building block configuration will make them easier to install, maintain and replace.

Three motors driving a gear were found to be the best solution for the electrical actuator. The selected electrical machine technology for the electrical actuator was PMSMs. By grouping the windings inside the apparatus the motors can be built with redundancy, this will make the actuator highly available. PMSMs can also run flooded with sea water, one of the objectives for this thesis. The motors and the gear will be possible to incorporate in the size limitations that were given in the FDS. The proposed electrical actuator will have 12 centimetres of available space where motor drivers can potentially be located.

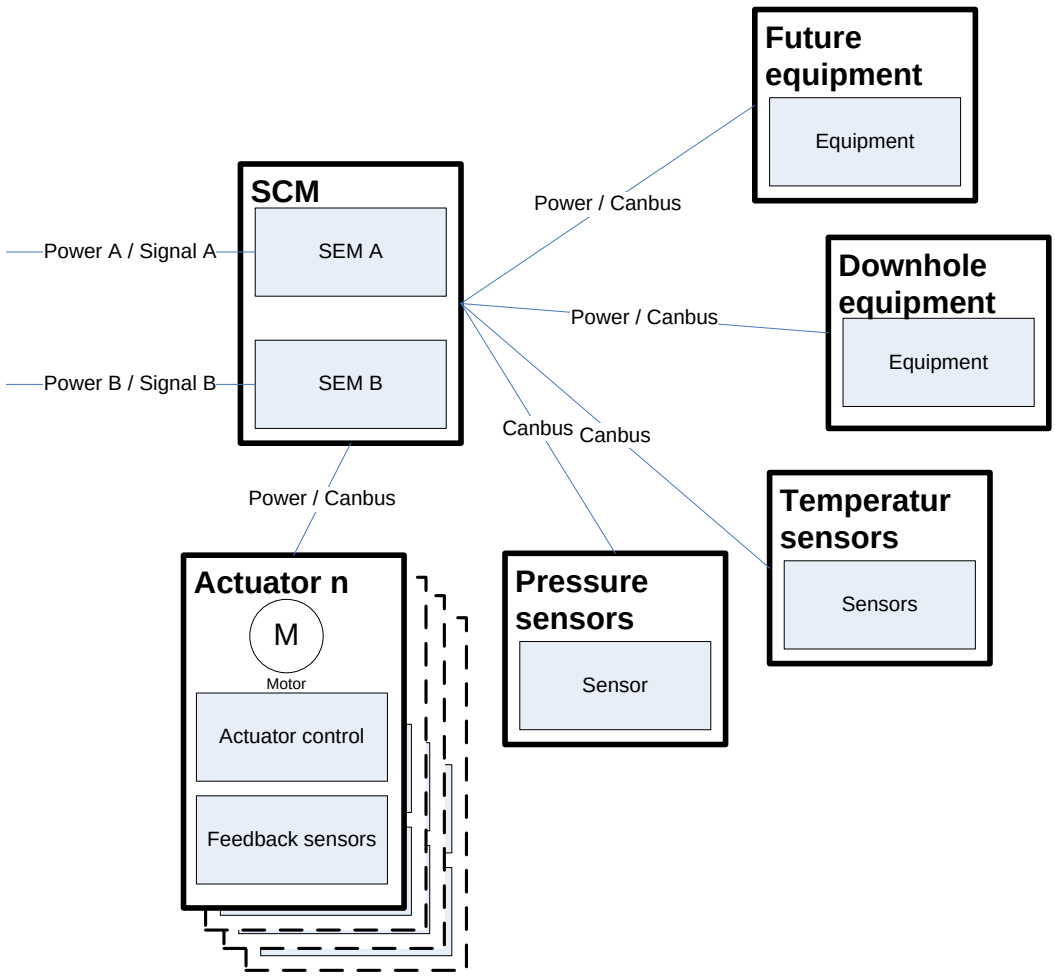

Figure 7.2: Integrated motor driver control structure overview

For controlling the actuators on the electrical x-mas tree, an integrated motor drive was designed. Integrated here means, that the motor drives are incorporated in the actuator assembly.

Such an integrated solution with the actuators presented here will be highly available with redundant actuators, power and communications where 'no single point' of failure can disrupt the hydrocarbons production.

This thesis shows that an electrical actuator is technically and mechanically possible to build from an electrical perspective.

To make this actuator commercially available further investigation will be required. A multiple of issues still needs to be addressed before the actuator actually can be built such as;

- Complete prototype with the gears, motors and ROV override must be built
- Failsafe solutions must be evaluated and decided
- Drivers must be detail designed and built
- The mechanical structures for the electronics and the actuator must be built and tested
- Long term operation with actuator flooded with seawater

Bibliography

[1] A. Kristin Hasvold, "Electric actuation of a subsea xmt," Master's thesis, Norwegian University of Science and Technology, 2007. Department of Structural Engineering.

[2] ISO, "En iso 13628-1:2005 petroleum and natural gas industries - design and operation of subsea production systems - part 1: General requirements and recommendations," british standard, International Organization for Standardization, 2005.

[3] ISO, "En iso 13628-4:1999 petroleum and natural gas industries - design and operation of subsea production systems - part 4: Subsea wellhead and treee equipment," british standard, International Organization for Standardization, 1999.

[4] ISO, "En iso 13628-6:2006 petroleum and natural gas industries - design and operation of subsea production systems - part 6: Subsea production control systems," british standard, International Organization for Standardization, 2006.

[5] ISO, "En iso 13628-8:2002 petroleum and natural gas industries - design and operation of subsea production systems - part 8: Remotly operated vehicle (rov) interfaces on subsea production systems," british standard, International Organization for Standardization, 2002.

[6] ISO, "En iso 10423:2004 petroleum and natural gas industries - drilling and production equipment - wellhead and christmas tree equipment," british standard, International Organization for Standardization, 2004.

[7] NORSOK, "Norsok u-001 subsea production systems," norsok standard, Norwegian Technology Centre, 2002.

[8] IWIS. http://www.iwis-panel.com/background.asp accessed 07.06.2007.

[9] S. for Underwater Technology. http://sig.sut.org.uk/subseasection/sutsse2.htm accessed 28.03.2007.

[10] B. Mitchelson, "Protective coatings soulutions for deepwater projects," report, International Protective Coating, 2003.

[11] E. Winther-Larssen, "Analysis of all-electric systems for subsea development." Department of Technical Cybernetics, 2006.

[12] K. O. Products, "Ak 1-04 subsea awareness - lesson 2.ppt," 2006. Lesson 2 in Aker Kvaerner Subsea awareness course.

[13] A. Kristin Hasvold, "Electric actuation of a subsea xmt." Department of Structural Engineering, 2006.

[14] K. oil and gas, "Ventil kompendium - en grunnleggende innføring i ventiler." Kvaerner Piping, 1999.

[15] Exlar. http://www.exlar.com/TI accessed 24.05.2007.

[16] N. Mohan, T. Undeland, and W. Robbins, *Power Electronics.* Wiley and Son, 1995.

[17] D. R. Patric and S. Fardo, *Electrical motor control systems*, pp. 170–184. The Goodheart-Willcox company, INC., 1999.

[18] R. Miller, M. R. Miller, and E. P. Anderson, *Electric motors*, pp. 32–33. Wiley, 2004.

[19] R. Krishnan, *Electrical motor drives: modeling, analysis, and control.* Prentice Hall, 2001.

[20] F. Magnussen, *On Desing and Analysis of Synchronous Permanent Magnet Machines for Field weakning operation in Hybrid Electric Vehicles.* PhD thesis, Royal Institute of Technology, Sweden, 2004.

[21] L. H. Hansen, L. Helle, F. Blaabjerg, E. Ritchie, S. Munk-Nielsen, H. Bindner, P. Sørensen, and B. Bak-Jensen, "Conceptual survey of generators and power electronics for wind turbines," tech. rep., Risø National Laboratory, Roskilde, Denmark, 2001.

[22] S. Øverbø, "Pmsm maskiner." Internal document from SmartMotor, 2007.

[23] . Krøvel, R. Nilssen, S. E. Skaar, E. Løvli, and N. Sandøy, "Design of an integrated 100kw permanent magnet synchronous machine in a prototype thruster for ship propulsion," tech. rep., Department of Electrical Power Engineering, NTNU, Trondheim, Norway., 2004.

[24] K. J. Strnat, "Modern permanent magnets for applications in electrotechnology," in *PROCEEDINGS OF THE IEEE, VOL. 78, NO. 6, JUNE 1990*, pp. 923–946, 1990.

[25] F. Caricchi, F. Crescimnini, and O. Honorati, "Modular axial-flux permanent-magnet motor for ship propulsion drives," in *IEEE Transactions on Energy Conversion, Vol. 14, No. 3*, pp. 673–679, 1999.

[26] J. F. Gieras, R.-J. Wang, and M. J. Kamper, *Axial Flux Permanent Magnet Brushless Machines*. Kluwer Academic Publisher, 2004.

[27] F. Caricchi and F. Crescimnini, "Axial-flux permanent magnet machine with watercooled ironless stator," in *IEEE/KTH Stockholm Power Tech Conference, Stocholm Sweden, june 18-22*, 1995.

[28] R. Nilsen, *Elektrisk motordrifter*. Institutt for elkraftteknikk, 2001.

[29] F. L. Luo, Y. Hong, and R. Muhammed, *Digital Power Electronics and Applications*. Academic press, 2005.

[30] Microchip. http://www.microchip.com/ accessed 19.05.2007.

[31] Xilinx. http://www.xilinx.com/ accessed 19.05.2007.

[32] T. M. Jahns, N. R. Brown, and R. D. Lorenz, "Development of a power converter for an integrated modular motor drive," in *2007 CPES Power Electronics Conference Proceedings*, pp. 419–425, 2007.

[33] K. Davey, "Cable interconnection and reconfiguration on the ocean floor." Internal document Aker Kvaerner, 2007.

[34] LVDT. http://www.macrosensors.com/ accessed 07.06.2007.

Appendix A

Worst case load

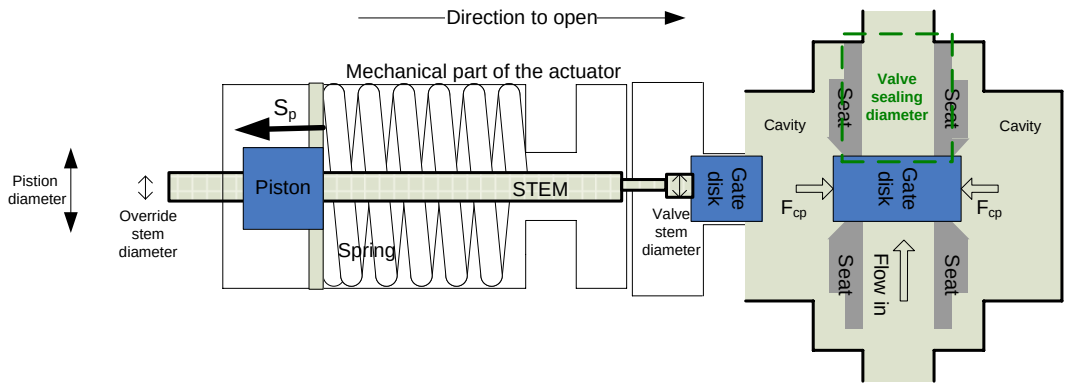

Figure A.1: Force balance

SYMBOLS

A_v	Pressure acting area
A_p	Actuator piston area
A_{os}	Override stem area
A_{vs}	Valve stem area
F_{bp}	Bore pressure
F_{frs}	Static friction force
F_{cp}	Cavity pressure at actuator stem
F_{co}	Net requierd force to crack open with full pressure in bore at surface
O_{sd}	Override stem diameter
P_d	Piston diameter
S_t	Stroke
S_{pf}	Seal packing friction(assumed)
S_p	Spring preload(valve closed)
S_c	Spring constant
V_f	Valve force
V_{sd}	Valve stem diameter
V_{sed}	Valve sealing diameter
V_p	Valve pressure rating
V_{cp}	Valve cavity pressure at crack open
μ_d	Dynamic friction factor
1in	one inch, 2.54cm

Valve Parameters	
Valve size:	$5\frac{1}{8}$inch
Valve sealing diameter, V_{sed}:	6.30inch
Valve pressure rating, V_p:	10000psi
Valve cavity pressure at crack open, V_{cp}:	11150psi
Static friction factor, μ_s:	0.2
Dynamic friction factor, μ_d:	0.15
Actuator Parameters	
Piston diameter, P_d:	9inch
Override stem diameter, O_{sd}:	2.25inch
Valve stem diameter, V_{sd}:	2.50inch
Stroke, S_t:	5.89inch
Seal packing friction(assumed), S_{pf}:	6000lb
Spring preload(valve closed), S_p:	30202lb
Spring constant, S_c:	4160,27lb/inch

Table A.1: Input parameters

A.1 Valve calculations

Calculating the areas and forces that is working in the valve Pressure acting area, A_v:

$$A_v = \pi \cdot r^2 = \pi \cdot (\frac{1}{2} \cdot V_{sed})^2 = 31.17in^2 \tag{A.1}$$

Valve force, V_f

$$V_f = A_v \cdot V_p = 311724lb \tag{A.2}$$

Static friction force, F_{frs}

$$F_{frs} = V_f \cdot \mu_s = 62345lb \tag{A.3}$$

Dynamic friction force, F_{frd}

$$F_{frd} = V_f \cdot \mu_d = 46759lb \tag{A.4}$$

A.2 Actuator area calculations

Calculating the areas in the actuator

Actuator piston area, A_p

$$A_p = \pi \cdot (\frac{1}{2} \cdot P_d)^2 = 63,62in^2 \tag{A.5}$$

Override stem area, A_{os}

$$A_{os} = \pi \cdot (\frac{1}{2} \cdot O_{sd})^2 = 3.98in^2 \tag{A.6}$$

Valve stem area, A_{vs}

$$A_{vs} = \pi \cdot (\frac{1}{2} \cdot V_{std})^2 = 4.91in^2 \tag{A.7}$$

A.3 Force calculations

Calculating forces to find the worst case crack open force:

Bore pressure towards valve stem(crack open), F_{bp}

$$F_{bp} = V_p \cdot A_{vs} = 49087lb \tag{A.8}$$

Cavity pressure towards valve stem(crack open), F_{cp}

$$F_{cp} = V_{cp} \cdot A_{vs} = 56450lb \tag{A.9}$$

The working forces to get the net required force to crack open with full pressure in bore at surface(F_{co}) is the spring preload, the cavity pressure, the static friction to overcome and the spring constant times one inch. The reason for multiplying the spring constant with one inch is that this is the distance that is needed to be overcome to get over from a crack open state to a open state where the system is moving and the friction is going from a static friction to a dynamic friction.

Net required force to crack open full pressure in bore, F_{co}

$$F_{co} = S_p + S_{pf} + F_{cp} + F_{frs} + S_c \cdot 1in = 154997lb = 70305kg \tag{A.10}$$

Appendix B

Control layouts

XMT Hydraulic Schematic

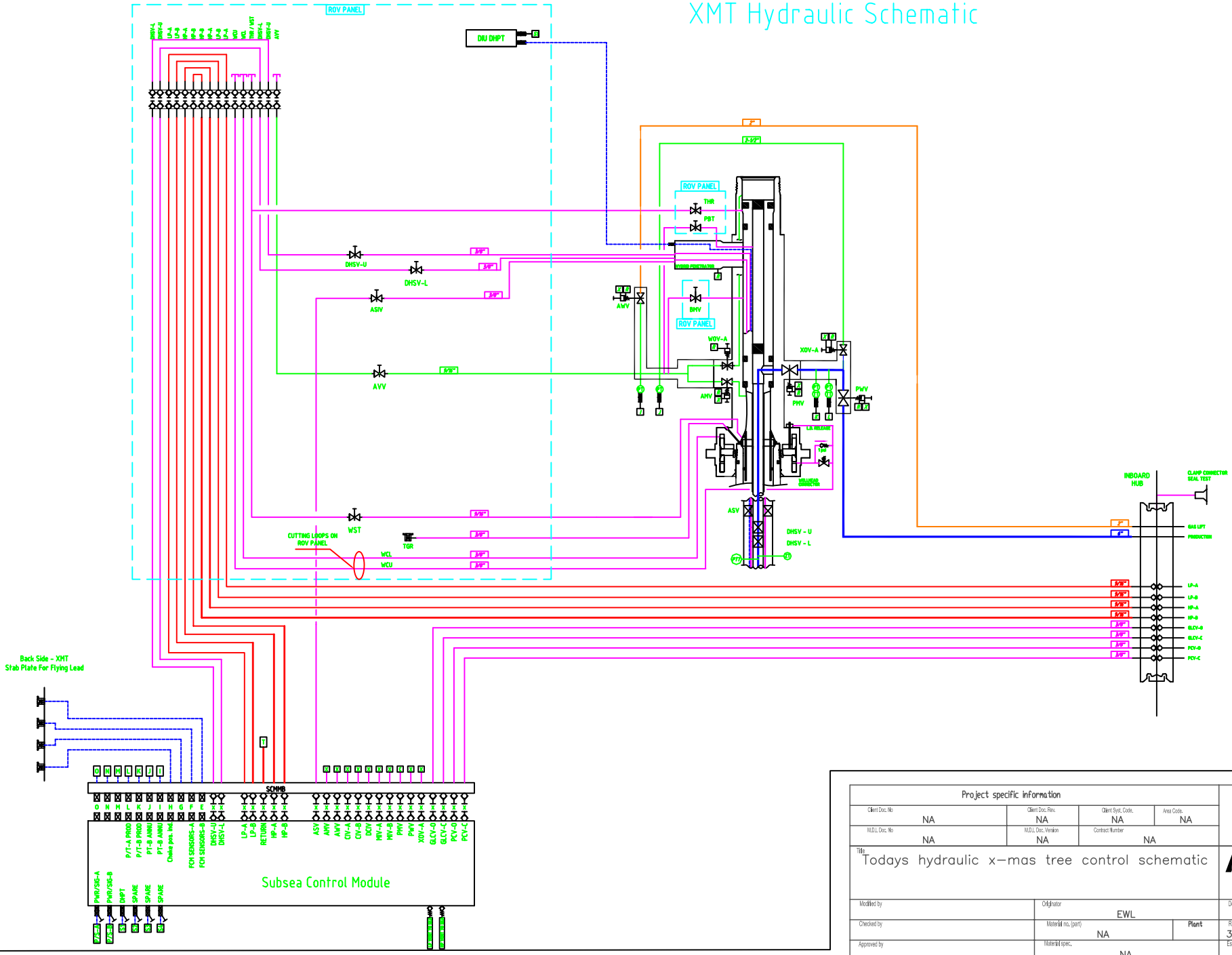

Project specific information			
Client Doc. No: NA	Client Doc. Rev.: NA	Client Syst. Code.: NA	Area Code: NA
M.D.L. Doc. No: NA	M.D.L. Doc. Version: NA	Contract Number: NA	

Title: Todays hydraulic x-mas tree control schematic

AKER KVÆRNER™
Aker Kvaerner Subsea

Modified by	Originator: EWL	Document no.: 1	Doc. version	ECO no.: NA
Checked by	Material no. (part): NA	Plant	Release Date: 30.05.2007	Reason for issue
Approved by	Material spec.: NA	Est. Weight: NA	Size: A3	Sheet no: 001

XMT Electric Schematic
Integrated control

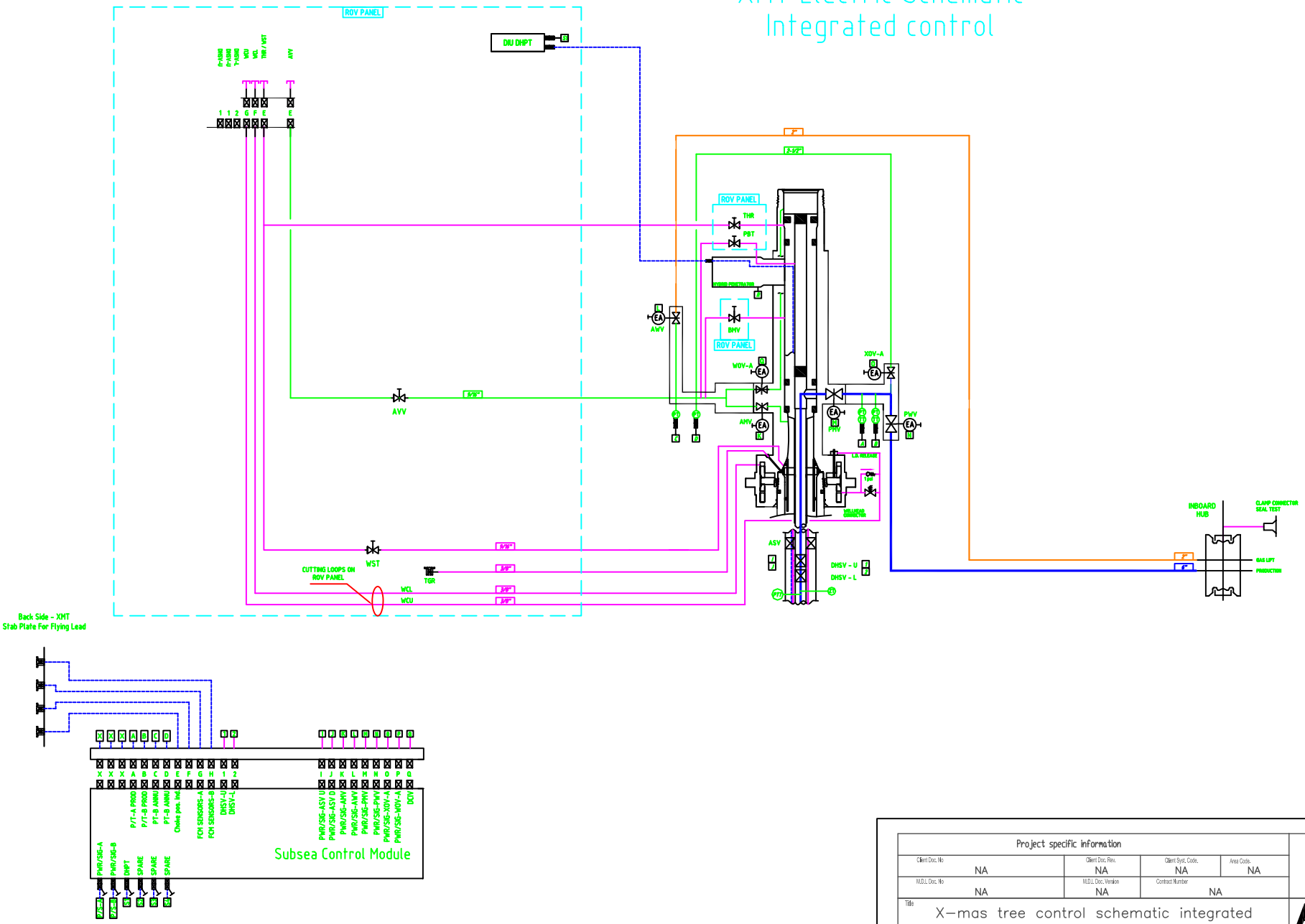

Project specific information			
Client Doc. No: NA	Client Doc. Rev.: NA	Client Syst. Code.: NA	Area Code: NA
M.D.L. Doc. No: NA	M.D.L. Doc. Version: NA	Contract Number: NA	

Title: X–mas tree control schematic integrated

AKER KVÆRNER™
Aker Kvaerner Subsea

Modified by	Originator: EWL	Document no.	Doc. version / ECO no.: NA
Checked by	Material no. (part): NA / Plant: Lys	Release Date: 30.05.2007	Reason for issue
Approved by	Material spec.: NA	Est. Weight: NA	Size: A3 / Sheet no: 001

Appendix C

Estimates of motor sizes

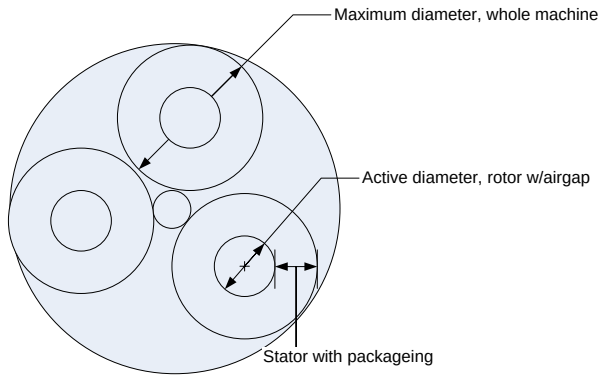

Figure C.1: Number of motors

T	torque [Nm]
D	Diameter of the machine [m]
L	Length of the machine [m]
P	Power [W]
v	Rotational speed [rpm]
k	Dimensioning factor given from experience [Nm/m^3]
ω	Machines rotational speed [rad/sek]

The two main equations are shown in C.1 and C.2.

$$T = k \cdot D^2 \cdot L \tag{C.1}$$

$$P = \frac{T \cdot \pi \cdot v}{30} \tag{C.2}$$

The diameter D of the machine and the rotational speed v, are the changeable parameters. The equations C.1 and C.2 is then restructured to give out the length, L of the machine C.5. The lowest amount of power the machine has to give is calculated from C.2. The mechanical input data has been calculated by [1]. The maximum diameter of the motor, the torque T, and the recommended rotational speed v has been taken from there.

$$\omega = 2\pi \cdot \frac{v}{60} \tag{C.3}$$

$$T = \frac{P}{\omega} \tag{C.4}$$

$$L = \frac{T}{k \cdot D^2} \tag{C.5}$$

Microsoft Excel was used to calculate the estimates for the motors. The results are shown under.

Inches	*45*	*Meters*	*1,143*
Meters	*1,7*	*Inches*	*66,929*

Formler

*Power = Torque * 2pi *Rotational speed*

*T = k*L*D^2*

*omega = 2pi*speed/60*

Dimensioning

Power P	W	0
k	Nm/m^3	66200
Speed v	rpm	0
Omega	rad/sek	1
Torque T	Nm	0
Diameter D	m	1
Length L	meter	0

Direct driven solution

Mechanical input		*Acme screw*	*Ball screw*	*Roller screw*
Speed	rpm	90	90	90
Torque, input	Nm	2847,678928	747,9903317	659,9914691

Results		Acme screw	Ball screw	Roller screw	Roller screw with redundancy
Power P	W	26838,7416	7049,642793	6220,273	14000
Dimensonerende faktor k	Nm/m^3	66200	66200	66200	66200
Speed v	rpm	90	90	90	90
Omega	rad/sek	9,424777961	9,424777961	9,86879	9,424778
Moment T	Nm	2847,678928	747,9903317	659,858	1485,446
Diameter D	m	0,25	0,25	0,25	0,25
Aktiv Lengde L	meter	0,688260768	0,180783162	0,159482	0,35902

Direct solution_with spring

INPUT		roller screw
Speed	rpm	94,24
Torque, input	Nm	841,9431603
Power	W	8307,392543

Gear Example 1

Mechanical input		*acme screw*	*ball screw*	*roller screw*
Speed	rpm	533,3333333	533,3333333	533,333333
Torque, input	Nm	183,6340206	48,32474227	42,5257732
Diameter D	m	0,12	0,12	0,12

Results		**Acme screw**	**Ball screw**	**Roller screw**	**Rollerscrew same rpm full redundant motors**
Power P	W	10256,05849	2698,962761	2375,087228	4800
k	Nm/m^3	66200	66200	66200	66200
Speed v	rpm	520	520	520	520
Omega	rad/sek	54,45427266	54,45427266	54,45427266	54,45427
Torque T	Nm	188,3425852	49,56383822	43,61617761	88,14735
Diameter D	m	0,07	0,07	0,07	0,07
Length L	meter	0,580623298	0,152795605	0,134460132	0,271741

Roller screw with higher rpm	**Rollerscrew with full redundancy and higher rpm**
2375	4800
66200	66200
800	800
83,7758041	83,7758
28,34947424	57,29578
0,07	0,07
0,087395876	0,176632

Gear Example 1_with spring

		roller screw
Speed	rpm	533,333333
Torque, input	Nm	54,25257732
Power	W	3029,463918

		Roller screw	**Roller screw with redundancy**
Power P	W	3029	6060
k	Nm/m^3	66200	66200
Speed v	rpm	520	520
Omega	rad/sek	54,45427266	54,45427
Torque T	Nm	55,62465261	111,286
Diameter D	m	0,07	0,07
Length L	meter	0,171479908	0,343073

Gear Example 2

		Acme screw	Ball screw	Roller screw
Speed	rpm	900	900	900
Torque, input	Nm	112,1857323	29,52256114	25,9798538
Diameter D	m	0,17	0,17	0,17

		Acme screw	**Ball screw**	**Roller screw**	**Roller screw with redundance**
Power P	W	10573,25618	2782,435836	2448,543536	5000
k	Nm/m^3	66200	66200	66200	66200
Speed v	rpm	900	900	900	900
Omega	rad/sek	94,24777961	94,24777961	94,24777961	94,24778
Torque T	Nm	112,1857323	29,52256114	25,9798538	53,05165
Diameter D	m	0,1	0,1	0,1	0,1
Length L	meter	0,169464852	0,044596014	0,039244492	0,080138

Roller screw with redundcane
6000
66200
900
94,24777961
63,66197724
0,1
0,096166129

Appendix D

Functional design specification

All-electric Xmas tree actuator

Functional Design Specification

Aker Kvaerner Subsea

Author	Einar Winther-Larssen Ann-Kristin Hasvold Svein Nesje
Date	14.06.2007

Version: 1.0

06/16/2007

AKER KVÆRNER™

Table of contents

1 INTRODUCTION

1.1 Introduction

This specification outlines the functional requirements and design specifications for an electrical actuator solution for use on a subsea XMT system.

The objective with use of an electrical actuator is to manage long stepout fields where conventional hydraulic systems may have limitations in form of function and performance. There are other reasons to go electric as well, like avoid use of hydraulic oil for environmental reasons, as well as cost savings due to eliminations of long multiline umbilicals.

The development of components for an all electric subsea subsea system has started in various areas, and is mainly divided into 3 areas:

- Subsea Manifold systems
- Subsea XMT systems
- Downhole systems.

1.2 References

ISO 10423	Drilling and Production Equipment – Wellhead and XMT Equipment
ISO 13628-4	Specification for Subsea Wellhead and Christmas tree Equipment
ISO 13628-8	Remotely Operated Vehicle (ROV) interfaces on Subsea Production Systems
IEC 61508	Functional safety of electrical/electronic/ programmable electronic safety-related systems
ISO 15156	Materials for use in H2S containing environments in Oil and Gas production
IEC 61800-1	Adjustable speed electrical power drive systems – Rating specification for low voltage adjustable speed d.c power drive system.
IEC 61800-2	Adjustable speed electrical power drive systems – Rating specification for low voltage adjustable frequency a.c power drive system.
IEC 61800-3	Adjustable speed electrical power drive systems - EMC requirements and specific test methods
IEC 61800-5	Adjustable speed electrical power drive systems - Part 5-1: Safety requirements Electrical, thermal and energy
NACE MR-0175	Standard Material Requirements, Sulphide Stress Cracking Res. Metallic Materials for Oilfield Equipment.

1.3 Abbreviations/definitions

Term	Description
AKS	Aker Kvaerner Subsea
API	American Petroleum Institute
AC/a.c	Alternating current
CAN	Controllable Area Network
DC/d.c	Direct current
EMC	Electromagnetic Compatibility
ISO	International Organization for Standardization
IEC	International Electro technical Commission
PDS	Power Drive System
ROV	Remotely operated vehicle
SCM	Subsea Control Module
SI	International System of Units
SIL	Safety Integrity Level
XMT	X-mas tree
PSL	Product Specification Level
HVOF	High Velocety Oxygen Fuel
PSI	Pound Per Square Inch
XMT	X-mas tree

2 DESIGN AND OPERATING PARAMETERS

2.1 Design data

Valve Bore:	5-1/8’’
Design Pressure:	10.000psi (690bar)
ISO valve specification:	10423/13628-4
ISO product specification level:	PSL3 / PSL3G
ISO material class designation:	HH
ISO Temperature class:	U
Actuation type:	Electrical, with ROV override and mechanical or electric failsafe
Override method	Rotary
Maximum override force	1350 Nm Torque
ROV interface	Class 4
Failed position	Fail close
Valve stroke	5.89”
Design depth	3000 m

2.2 SIL requirements

Equipment related to safety functions shall be designed, manufactured and documented according to the requirements laid down in IEC61508. All safety functions shall be SIL3 rated.

3 FUNCTIONAL REQUIREMENTS

3.1 General

This section covers the general functional requirements for the electric actuator system. The opening and closing times may vary from valve size and actuator sizes due to the nature of stroke length and load demand. A table with loads and speed are listed in appendix A, and shall be used as guidelines for the various valve sizes.

For a XMT, it is mainly the 2-1/16” valves, and the 5-1/8” valves that forms the well barrier and shall follow ISO/API specs regarding shut down functions. This means that there are no compromises to establish rules and practice regarding shut down timing.

3.2 Functional Requirements Electrical Actuator

3.2.1 Operation:

4.1.1.1 The electrical actuator shall preferably open the valve within 10-20 seconds under full differential pressure. This shall be based on following operation conditions:

- Surface condition at max and min pressure in bore.
- Subsea condition at max and min pressure in bore.

3.2.1.1 The electrical actuator shall close the valve within 5-20 seconds under full differential pressure.

- Surface condition at max/min pressure in bore.
- Subsea condition at max/min pressure in bore.

4.1.1.2 The ROV override shall have capacity to crack open the valve under full differential pressure within 50% of the max torque stated by the selected ROV class identification in ISO 13628-8. A friction factor of 0.2 between the gate and seat shall be used for design purpose to determine the required torque. The override shall open the valve with a counter-clockwise rotation as viewed from the end of the stem.

4.1.1.3 The ROV override shall have capacity to close the valve under full differential pressure within 50% of the max torque stated by the selected ROV class identification in ISO 13628-8. A friction factor of 0.2 between the gate and seat shall be used for design purpose to determine the required torque.

3.2.2 Emergency:

3.2.2.1 The electrical actuator shall close within 15 seconds without use of electrical power in the case of emergency shut down, alternatively a SIL3 (defined in IEC61508-5) rated safety function can be used (ex. power storage).

3.2.2.2 If use of actuator spring for fail close operation of the valve, the spring shall be designed for a minimum mean spring life of 5000 cycles.

3.2.3 Barrier Requirements

There are three possible options of design depending on what part of the actuator that function as a well barrier. The part of the actuator that is tested as a barrier section according to ISO 10423 together with the valve can not be replaceable subsea. If these structures should be replaced the whole X-mas tree must be pulled and the section must be replaced with a new section that is tested and deployed together.

Option 1

The valve and a mechanical connector part function as the well barrier. Both the electrical and mechanical part of the actuator is retrievable.

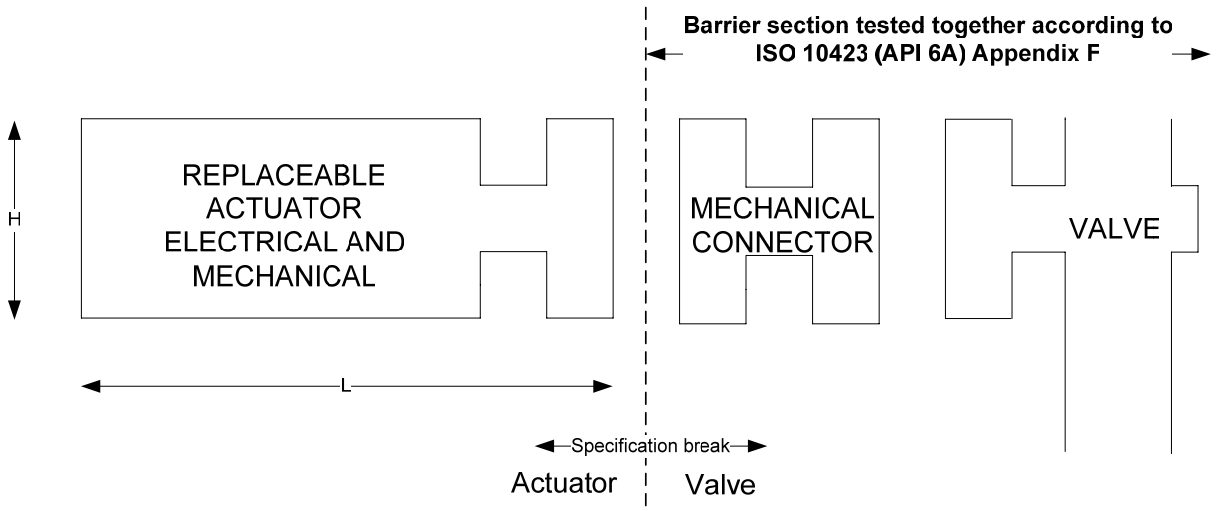

Option 2

The valve and the mechanical part of the actuator function as the well barrier. Only the electrical part of the actuator is retrievable.

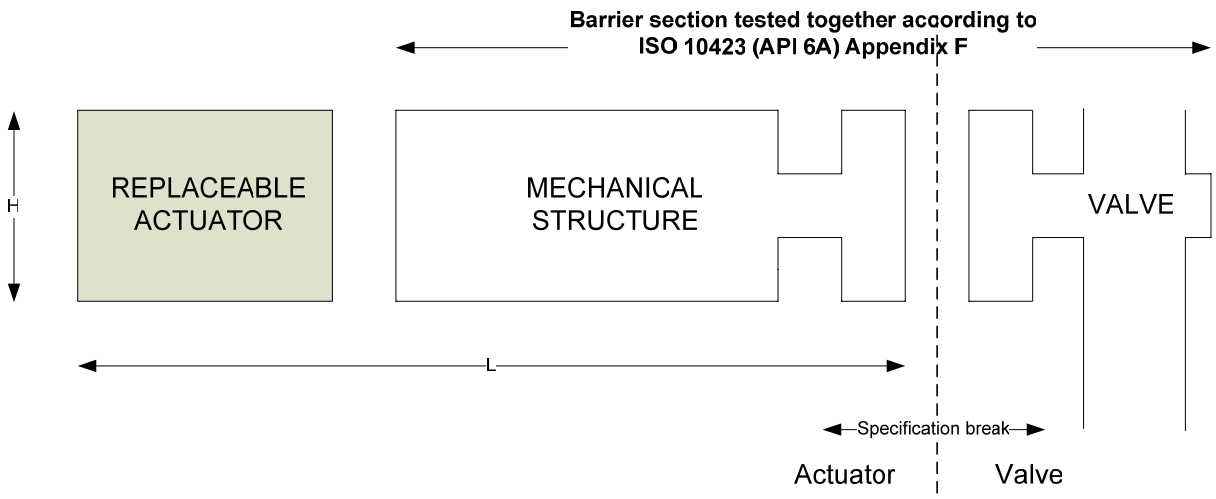

Option 3

As in option one, the valve and a mechanical connector function as a well barrier. The electrical and mechanical parts of the actuator are separated in two structures. Both parts are replaceable.

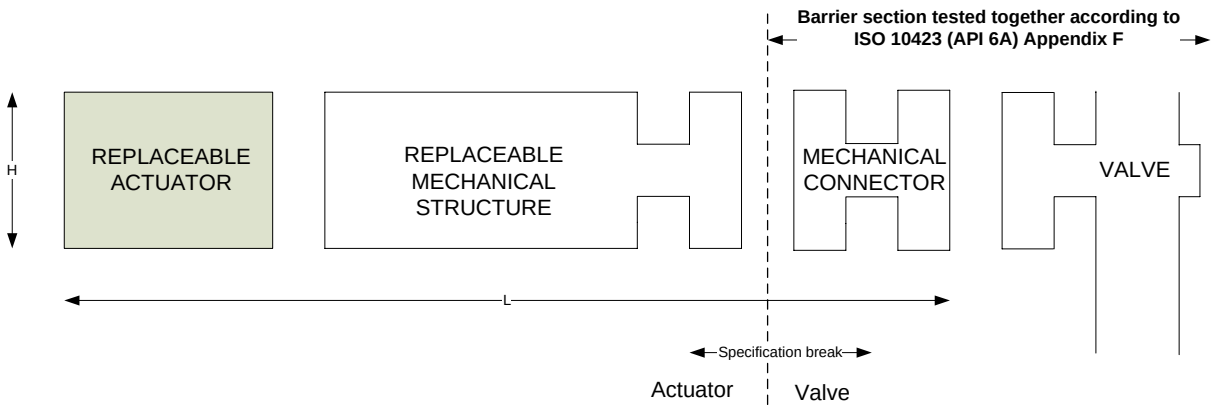

3.2.4 Design

3.2.4.1 Interface between actuator and ROV shall be according to ISO13628-8, class 4. Greater or smaller interface may be selected upon selected solution for override loads.

3.2.4.2 Design shall consider marine growth, fouling, corrosion, hydraulic operating fluid and, if exposed, the well stream fluid.

3.2.4.3 Actuator should have a positive mechanical lock in open position, so power can be released.

3.2.4.4 The actuator shall be possible to replace subsea, with use of an ROV.

3.2.4.5 The actuator shall have an electrical position indicator that identifies the valve status and position.

3.2.4.6 The actuator shall have a visual position indicator; it shall be marked with "Aquasign" to identify the valve status. "S" for shut, and "O" for open position. Letter size to be 100mm, alternatively, cut out letters in steal plate will be accepted.

3.2.4.7 The actuator shall have a self contained lubrication and compensation system. An open pigtail tube solution to sea is not acceptable. The actuator and all its components shall be in a closed and pressure balanced compensator system. The system shall be flushed clean according to NAS1638 class 6 or better.

3.2.5 Size and weight

3.2.5.1 The size of the 5" actuator must not exceed the given limitations shown in the figure below.

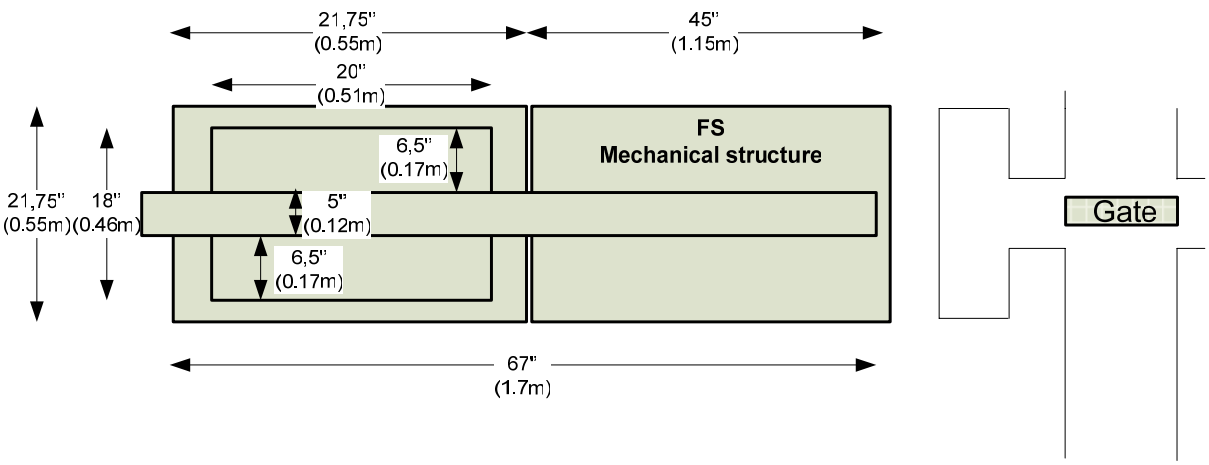

3.2.5.2 The weight of the retrievable part of the actuator can not exceed 75kg, as this is the maximum limit for the ROV.

3.2.6 Structural integrity

3.2.6.1 The structural integrity in the actuator and stem must be capable of 2.5 times the torque which is required to crack open the valve with full differential pressure, and not less than 1.25 times the max torque stated by the ROV class interface. It shall be clearly notified where the weak points are in the system and what capacity these points can handle.

3.2.6.2 The actuator shall have metal to metal back sealing towards bonnet.

3.2.6.3 The structural integrity in the actuator and stem system shall allow for a max torque from the electrical motor, and also the max torque stated by the ROV class interface without taking any permanent damage or limitation in use.

3.2.7 Communication

3.2.7.1 The minimum and maximum operating voltage and current levels under operation and in idle state must be given at delivery. A graph showing power, voltage and current levels vs. time under open/close operation and emergency shutdown operation shall be included.

3.2.7.2 The Power Drive System (PDS) in the actuator shall comply with IEC61800 -1/3 if DC motor is used or IEC61800-2/3 if AC motor is used.

3.2.8 Load conditions

3.2.8.1 The actuator shall function with these load conditions:

1a. Load condition, crack open at surface; 0-pressure in bore

1b. Load condition, crack open at surface; MAX-pressure in bore

1c. Load condition, closing at surface; 0-pressure in bore

1d. Load condition, closing at surface; MAX-pressure in bore

2a. Load condition, crack open at subsea; 0-pressure in bore

2b. Load condition, crack open at subsea; MAX-pressure in bore

2c. Load condition, closing at subsea; 0-pressure in bore

2d. Load condition, closing at subsea; MAX-pressure in bore

The valve forces are given in the table below:

	0m	**3000m**
Required force for closing, full pressure in bore	-16kN	-16kN
Required force for closing, zero pressure in bore	27kN	27kN
Required force to crack open, full pressure in bore	555kN	555kN
Required force to crack open, zero pressure in bore	27kN	27kN

Note that these are only the valve forces. As the table shows, these are independent of the water dept. In addition to this, the hydrostatic pressure on the actuator stem and the friction forces in the actuator must be taken into consideration. Also, if use of a mechanical spring for failsafe, the spring force must be added to the equation. This is not encountered in the table, as these values are dependent on the design of the actuator.

3.2.9 Handling and installation

3.2.9.1 The actuator shall have lifting points for handling and installation purposes. The lifting points shall allow for both vertical and horizontal handling and installation to the valve. The lifting points shall also be designed to carry the weight for both the actuator and valve as an integrated assembly.

4 MATERIAL

4.1 General

5.1.1 Materials selected shall be suitable for their area of use by being compatible with their operating environment throughout the design life of 20 years.

5.1.2 Externally exposed metallic materials shall be resistant to hydrogen embrittlement imposed by cathodic protection.

5.1.3 Metallic materials tensile- and hardness strength shall be documented to API 6A[43].

5 TESTING

5.1 General

6.1.1 The FAT shall ensure and demonstrate that equipment functions in accordance with this specification and to ISO 10423 / API6A, PSL, 3G and ISO 13628-4 / API 17D.

6.1.2 The FAT programme and procedures shall be prepared and issued to AKS for approval in due time before testing.

5.2 Fat valve testing

6.2.1 All valves shall be tested to ISO 10423 / API6A, PSL, 3G (inclusive of gas testing on the valve body to seat and seat to gate interfaces) as a minimum. Verification test shall be to ISO 10423 / API6A, PR2 Level. The valve shall be tested together with the actuator as an integrated assembly.

6.2.2 The following tests shall also be included:

- Dimensional control
- Shell tests
- Seat test (high and low pressure)
- Torque measurements.
- Signature Test
- The signature test shall be data point from adequate test system, and graphs shall be provided indicating the valve characteristics and pressure/Load demand.

5.3 Fat actuator testing

6.3.1 The actuator shall be tested together with the valve as an integrated assembly, and demonstrate compliance to the functional criteria in this specification.

6.3.2 *The following tests shall minimum be included:*

- Dimensional control
- Torque measurement
- Proof Torque test to max #Class Torque
- Actuator Signature Test
- The signature test shall be data point from adequate test system, and graphs shall be provided indicating the valve characteristics and pressure/Load demand.

6 QUALIFICATION TESTING

6.1 General

Qualification testing shall be carried out on any unqualified equipment. Previously qualified equipment shall be subjected to re-qualification if the design has been subjected for any change which may affect the form, function or performance to the object, or which see different load demands. API scaling is not acceptable.

Any qualification shall be based on ISO 10423 / API6A and ISO 13628-4/API 17D and shall to the full extent be followed.

The qualification program shall mainly be divided into 4 sections:

1. ISO 10423/API 6A and ISO 13628-4/API 17D Qualifications (400 cycles)
2. Client specific endurance cycles (1200 Cycles)
3. Actuator Endurance testing, 1.000.000 cycles with full load representing valve load.
4. Hyperbaric Chamber Testing, 120 Cycles at full valve loads.

Section 1 & 2 is to be done together with the valve if the actuator stem seal is a part of the well barrier. The total number of cycles is 1600.

Section 3 is an endurance test for the actuator only. Objective is to verify reliability for the electrical actuator at simulated full valve load. Test fixture to represent the stem load can be used.

Section 4 is to be performed in Hyperbaric Chamber, simulating function and performance at full design water depth. In this case, the actuator shall be tested together with the valve.

It shall be noted that if there is specific requirement for the valve or actuator in service which not are covered by the above test program, it may be required to include as a pert of the qualification program.

It shall also be noted that the objective is to use an already qualified valve, and the test may carry on even if the valve should for any reason not be sealing. As long the loads are represented and the actuator sees the loads, representing the valve function and performance.

The sequence of testing are subjected for evaluation, since the 1.000.000 cycle test
With full load demand is considered to be the worst. The ISO/API qualification can then be done after this when refurbishment has been done.

6.2 ISO/API Qualification

7.2.1 The actuator and valve shall be tested together as an integrated assembly and be qualified according to ISO10423/API 6A and ISO13628-4/API 17D.

7.2.2 Before qualification start, the valve and actuator shall be FAT tested for the function and performance according to an established FAT procedure. The valve and actuator shall be observed to function as intended, and the valve shall have 0-zero leakage.

7.2.3 The valve and actuator shall have signature prints for the following stages in qualification:

- FAT signature prior to ISO 10423 / API6A PR2 Qualification.
- After Completion of ISO 10423 / API6A PR2 Qualification.
- After Completion of ISO 13628-4 / API 17D Qualifications.

7.2.4 The actuator and valve shall be inspected and reassembled before start of client specific endurance testing. No parts shall be replaced, but be assembled back in “as is “condition.

7.2.5 Before start of client specific endurance testing, the actuator shall have a new signature test to verify load characteristic after assembly.

7.2.6 Signature tests to be taken after ea. 200 cycles. The cycles shall be performed with full load representing crack open loads from the valve.

7.2.7 After 1200 cycles, the actuator and valve shall be inspected. Parts shall be recorded for wear and tear. Parts subjected to not be fully fit for purpose, shall undertake a design review. For any parts subjected for replacement which may affect form, function or performance to the assembly, the qualification is subjected to be redone.

6.3 1.000.000 Endurance Cycle Testing

7.3.1 The objective with this test is to verify mechanically and electrically the reliability for long time the actuator.

7.3.2 The actuator is foreseen to be tested with use of a test rig, simulating the valve loads on the actuator stem. The test do not include for gas testing on the actuator stem seal, if this is a part of the actuator design.

7.3.3 Before test, the actuator shall have a 100% dimensional inspection of all parts. Actual dimension shall be recorded before assembly.

7.3.4 The endurance cycling shall be done simulating the opening/closing cycle for the valve at full differential pressure.

7.3.5 One cycle is defined as open and close. The cycles shall be recorded.

7.3.6 The test shall be conducted with the actuator submerged in water. The water temperature shall be kept between 4-10 deg. C.

7.3.7 Data acquisition shall be used to monitor and verify all essential functions and load demands to both the test equipment as well as the actuator. The objective is to verify a trend in changes (if any). A minimum of recorded data is foreseen as follow:

- Electric power stability and voltage reading.
- Power consumption (Amp reading)
- Motor Torque reading
- Linear force reading
- Temperature reading
- Battery power (if any)
- Communication
- Position monitoring
- Lubrication oil level monitoring.
- Compensation oil level monitoring.
- Leak detectors

7.3.8 Signature testing shall be done for ea. 10.000 cycles. At the end of 1.000.000 cycle test, there will be 100 data points available to draw a graph for any from any point in the cycle.

7.3.9 The test shall go 24 Hours continuously until complete, and there shall be built in limits and safety features which stop the test automatically if any abnormal readings indicate that something is wrong.

7.3.10 If the test fail, and parts must be replaced, the test shall start from beginning again.

6.4 Emergency Closing / Fail Safe Close Function Testing

7.4.1 If the actuator failure modes includes for fail safe close by loss of power or communication, but this is not part of the endurance testing, this need to be tested separately.

7.4.2 If the actuator has loss of power during opening of the valve, the actuator shall be tested to fail safe position from midway position.

7.4.3 If the actuator has loss of communication during opening of valve, the actuator shall initiate a fail safe close

7.4.4 The number of cycles to be tested for special shut down features as listed above shall be minimum 10.000. This shall be in addition to the other cycles, unless included in 1.000.000 endurance test.

6.5 Hyperbaric Chamber Testing

7.5.1 The actuator and valve shall as a unit be tested in hyperbaric chamber to verify that actuator will function under full ambient pressure. This shall be verified with full pressure in the valve and with 0-zero pressure in the valve according to API.

7.5.2 The power source used to close the actuator at max depth shall be designed for 10% larger depth rating than stated working depth.