NTNU
Norwegian University of
Science and Technology

Voltage Upgrading of Overhead Lines

Anders Tuhus Olsen

Master of Science in Electric Power Engineering
Submission date: June 2010
Supervisor: Magne Eystein Runde, ELKRAFT

Norwegian University of Science and Technology
Department of Electric Power Engineering

Problem Description

Statnett wants to increase the transmission capacity in their 300 kV overhead lines by upgrading the operating voltage to 420 kV. To make this possible some modifications must be done. Insulator strings have to be elongated or replaced and the air clearances must be increased. EN standards provide guidelines for how to calculate the air clearances adequately to provide required safety margins.
It turns out that the formulas given by the standards provide greater safety margin than appropriate for upgraded transmission lines. Proper minimum air clearances represent a great potential for saving money when upgrading the voltage on overhead lines. It is therefore desirable to calculate the air clearances on the basis of smaller safety margins than described in the standard.

Assignment given: 15. January 2010
Supervisor: Magne Eystein Runde, ELKRAFT

Summary

Statnett wants to increase the transmission capacity in their 300 kV overhead lines by upgrading the operating voltage to 420 kV. To make this possible some modifications must be done. Insulator strings have to be elongated by two to four insulators and the air clearances must be checked. EN standards provide guidelines for how to calculate the air clearances adequately to provide required safety margins.

It turns out that the formulas given by the standards provide greater safety margin than appropriate for upgraded transmission lines. By finding new proper safety margins, several towers which otherwise would have to be rebuilt to fulfill the requirements for clearances, can stay unmodified. When considering the number of towers in an average transmission line, there is obviously a great potential for saving money by putting some effort looking into proper minimum air clearances. By reduce the air clearance by approximately 10 cm, 6.5 mill. NOK were spared in a 65 km transmission line. It is therefore desirable to calculate the air clearances on the basis of smaller safety margins than described in the standard, but which is still within acceptable safety limits. In the formulas for minimum distances, the statistical withstand voltage $U_{50\%}$, gap-factors and altitude factors are examined for the cases of operating voltage, switching impulse and lightning impulse.

Discrepancies between test results from a laboratory work conducted by STRI and calculations based on the EN standard of $U_{50\%}$, have been discovered. Tested U_{50} for switching impulses are 5–9 % higher than U_{50} from the standard. The same applies for lightning impulses where the tested value is 12 % higher than the standard. This gives reason to assume the standard to be somewhat conservative.

Further, discrepancies are found between the standard EN 50341 that says that the gap factor when an insulator is present is the same as if no insulator is present, and Cigré report 72, which says that the gap factor should be corrected for the presence of insulators. Correction for insulators will lead to a lower gap factor i.e. lower break down strength along the insulator string than in the rest of the air gap. It turns out that the combination of rain and insulator string reduce the gap factor and thus, the withstand strength in the cases of switching impulses in the order of 6-13 % for V-string insulators and 20-34 % for I-string insulators and for continuous power frequency voltage in the order of 25 % for V-string insulators and 33-40 % for I-string insulators.

Rain has no influence on the withstand strength of I-strings or V-strings exposed to lightning impulses.

Several previous researches [**1**][**2**] shows the same tendencies of lack of correlation between U_{50} and gap factors when air gaps with insulator strings are exposed to lightning impulses. Thus, the gap factor is not sufficient to describe the discharge characteristics of air gaps with insulator strings exposed to lightning impulses.

It is found that the air gap between phase and guy wire has approximately 7 % greater withstand strength than over the insulator string in a tower window. This additional safety margin is a desirable property in terms that the guy wires are the weakest point of a tower. This should however be verified by full-scale laboratory tests as this is mainly valid for the case of only the conductor-guy wire gap without the presence of the other air gaps that represent the tower window.

Preface

This project is done in cooperation with Statnett and Graz University of Technology and addresses a real problem concerning voltage upgrading of overhead lines in the Norwegian grid. The project is strongly linked to the standards of insulation coordination. A large part of the work has therefore been looking into what the standards contain and what they are based on.

I want to thank my academic supervisors Magne Runde from NTNU and Sonja Monica Berlijn from Statnett for their contribution to this project report.

I would also like to thank my brother Håvard Tuhus Olsen for language revision of this report.

Anders Tuhus Olsen

Trondheim 11.06.2010

Table of Contents

Table list

Table of figures

Symbol list

Symbol	Unit	Explanation
K_g	-	gap factor
K_{g_sf}	-	gap factor slow front wave for switching impulse
K_{g_ff}	-	gap factor fast front wave for lightning impulse
K_{g_pf}	-	gap factor for power frequency operating voltage
K_a	-	atmospheric correction factor
K_{cs}	-	statistical coordination factor. K_{cs} comes from choosing a risk of failure of the insulation that has been proven from experience to be acceptable
H	m	height from phase to ground
d_1	m	length of the insulator string
d_2	m	distance from phase to tower pole
d	m	distance from phase to tower construction
δ	m	with of the tower pole
U_{50}	kV	the voltage that gives a probability of 50 % for a flash over to occur for self restoring insulation
U_{10}	kV	the voltage that gives a probability of 10 % for a flash over to occur for self restoring insulation
δ	kg/m^3	air density
D_{pp}	m	minimum required air clearance phase to phase
D_{el}	m	minimum required air clearance phase to earth

Definitions

Gap factor

Gap factor is the relationship between the flashover voltage for a rod-plane gap and the flash over voltage of a practical air gap of identical size and for a positive voltage impulse.

The gap factor is given directly for switching overvoltage as K_{g_sf}. The gap factor for lightning impulse is derived from the switching overvoltage gap factor as $K_{g\_ff} = 0.74+0.26\ K_{g\_sf}$ and the gap factor for power frequency voltage is derived from switching impulse gap factor as $K_{g\_pf} = 1.35\ K_{g\_sf} - 0.35\ K_{g\_sf}^2$

Operating conditions

The standards have defined three different operating conditions that describe the wind conditions and the worst and most likely corresponding electrical stress.

- No wind: Lightning impulse (LI).
- 3 years return time: Switching impulse (SI).
- 50 years return time: Power frequency (PF).

Fast front overvoltage

Fast front overvoltages of importance for overhead lines are mainly lightning overvoltages due to a direct strike to the phase conductor. The representative voltage stress is characterized by the standard lightning impulse wave shape (1.2/50 µs). Fast front overvoltages are also referred to as lightning impulse (LI) in the standards for insulation coordination and are used as dimension criteria for determining necessary air clearance at no-wind conditions.

Slow front overvoltage

Slow front overvoltage can originate from faults, switching operations or distant direct lightning strikes to overhead lines. Slow front overvoltages of importance for overhead lines are overvoltages caused by earth fault, energization and re-energization. The standard switching impulse wave shape is (250/2500 µs). Slow front overvoltages are also referred to as switching impulses (SI) in the standards for insulation coordination and are used as a dimension criteria for determining necessary air clearance at wind speed with 3 years return time.

Continuous power frequency voltage

The continuous power frequency voltage (PF) is considered as constant and equal to the peak value of the highest system voltage ($\sqrt{2}\ U_s$) which is the highest value of operating voltage that occurs under normal operating conditions at any time and any point in the system. In the standards for insulation coordination, power frequency voltage is used as dimension criteria for determining necessary air clearance at extreme wind conditions with 50 years return time.

Minimum electrical clearances

Five types of electrical clearances are considered in the present standard EN 50341:

D_{el} "Minimum air clearance required to prevent a disruptive discharge between phase conductors and objects at earth potential during fast front or slow front overvoltages. D_{el} may be either internal when considering conductor to tower structure clearance, or external when considering a conductor to obstacle clearance."

D_{pp} "Minimum air clearance required to prevent a disruptive discharge between phase conductors during fast front or slow front overvoltages. D_{pp} is an internal clearance."

$D_{50Hz\_p\_e}$ "Minimum air clearance required to prevent a disruptive discharge at power frequency voltage between a phase conductor and objects at earth potential. $D_{50Hz\_p\_e}$ is an internal clearance."

This master thesis mainly deals with the issues related to minimum air clearances within the towers related to voltage upgrading. The air clearances that are treated in this thesis are therefore only Del and $D_{50Hz\_p\_e}$.

1 Introduction

The main grid in Norway was built during the time period from 1960 to 1990. Since then the demand for electricity has constantly increased, causing higher requirements to the grid's ability to transmit electricity. In order to meet toady's and future requirements for transmission capacity and security of supply, measures must be taken. One option is to build new transmission lines. This is however rather expensive and time consuming as this requires the acquisition of licenses for development of new lines. Another possible option to meet the requirement for higher transmission capacity is increasing the capacity of the existing transmission lines. An increase of capacity in transmission lines can be done either by increasing the current or increasing the voltage. Increasing the capacity by increasing the current level means the temperature of the conductors, thus the active losses will increase. To allow a higher conductor temperature one must make sure to make use of the proper conductor that is designed for high operating temperatures. Alternatively one can replace the existing conductors with conductors of greater cross section. This project exclusively deals with the other alternative for increasing the transmission capacity, which is to increase the operating voltage.

When upgrading the operating voltage, insulating coordination has to be done over again in order to obtain sufficient insulation strength for the new voltage level. Insulating coordination is the selection of the insulating strength consistent with the expected overvoltage to obtain an acceptable risk of failure.

The tower geometry and dimensions are originally designed for an operating voltage of 300 kV. To allow these towers to be exposed to higher electrical stress than they are originally designed for, some measures must be done. The insulator strings have to be elongated or replaced and the air clearances have to be increased in order to achieve sufficient dielectric strength. The tighter dimensions in a 300 kV tower, compare to a 420 kV tower, limits the extension of the insulators and the possible minimum distances.

The standards for insulation coordination provide guidelines for minimum air clearances. It has proven difficult to maintain the minimum air clearances within the standard's requirements without doing major modifications to the towers. However, the regulations say that it is not an absolute requirement to follow the method for insulating coordination described by the standards. The standards are provided as a recommendation to how things should be performed to ensure sufficient safety and security of supply. The regulations require that all deviations from the standards must be documented to comply with applicable laws and regulations to ensure the safety. This master thesis will examine the possibilities for voltage upgrading of tight dimensioned towers which limits the possibilities for voltage upgrading according to standards. When different solutions are considered, economy, safety security of supply must be considered.

A flow chart is made to give the reader a better overview of the different issues that are investigated and how the investigation is performed.

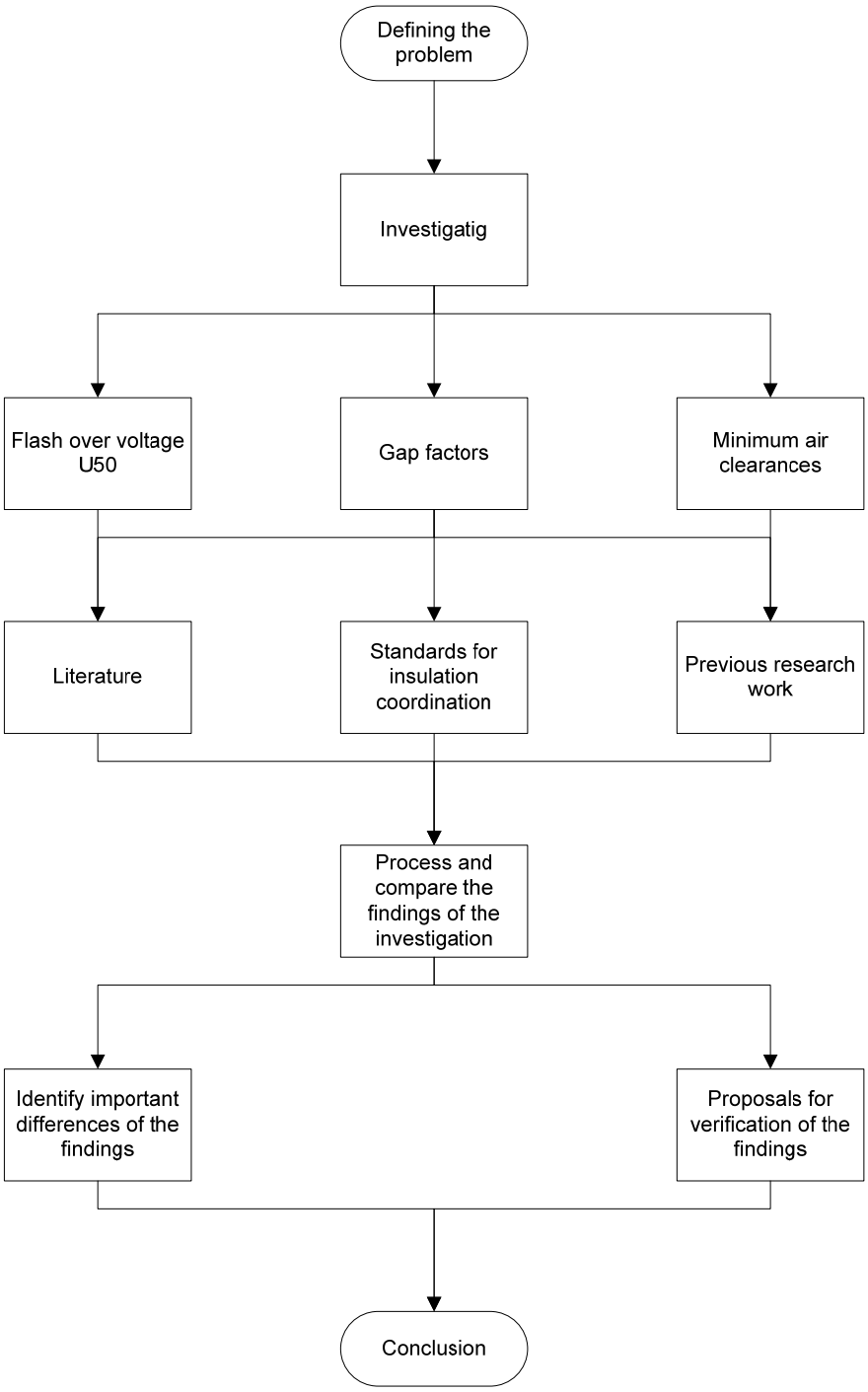

Figure 1 The project presented by a flow chart

2 Scope and limitations

This report examines minimum air clearances that may be allowed in a tower. It is known that current requirements for air clearances that are given in the standards are somewhat conservative and cannot be met without doing major modifications to the towers, which involves extensive costs. A major task is to find the appropriate minimum clearances that can allow a larger number of towers to stay unmodified without lack of the security of supply. This will always be an assessment of cost and reliability.

Gap factors will be examined and the gap factors recommended by the standards are compared to gap factors proposed other research work. The impact of the swing angle of the insulator and the insulator itself to the gap factor is examined. The statistical withstand voltage U_{50} will be examined for lightning impulses, switching impulses and continuous 50 Hz power frequency voltage.

Other aspects of interest of voltage upgrading that are not included in this report are location of surge arrestors and corona noise.

3 Society and economy

The idea of upgrading transmission lines is to get a grid with higher capacity at lower investment cost and with less environmental impact than building new transmission lines. Accordingly, when upgrading transmission lines, one should to the greatest extent possible make use of the existing lines, insulators, towers and other equipment. The environmental aspect of voltage upgrading is of great importance in today's society where there is a lot of focus on environment friendly energy production. Environment friendly power transmission should be a natural part of this.

4 Gap factors

Determining the electrical withstand strength of air gaps is done by disruptive discharge tests in laboratories. One desired outcome of such tests is to find the voltage amplitude that gives a 50 % probability for flash over, U_{50}. The voltage amplitude required to give a flash over is strongly dependent on the shape of the electrodes. On the basis of this phenomenon, the gap factor was introduced in order to correct the discrepancy between a reference gap where its electric properties was known and the shape of the actual electrode. The gap factor k_g is a multiplying factor which characterizes the shape of the electrodes of an air gap, thus discharge characteristics of any air gaps can be determined by multiplying the gap factor with the discharge characteristics of a reference gap. Among the different air gaps of spacing d, the positive polarity rod-plane gap has the lowest withstand strength and was therefore used as a reference gap with a gap factor $k_g = 1$.

4.1 Rod-plane gap

The rod-plane gap is a well known gap configuration used in laboratory testing. The radius of curvature of the rod (anode) is decisive for the value of the flashover voltage. For positive polarity impulse, the more pointed the anode, the lower the flash over voltage of a large air gap. For the cathode applies: the more pointed the cathode, the greater the flash over voltage of a large air gap.

The U_{50} value remains constant when the anode radius is less than a certain critical value $R_{critical}$ which is dependent on air gap spacing as shown in fig. 2.

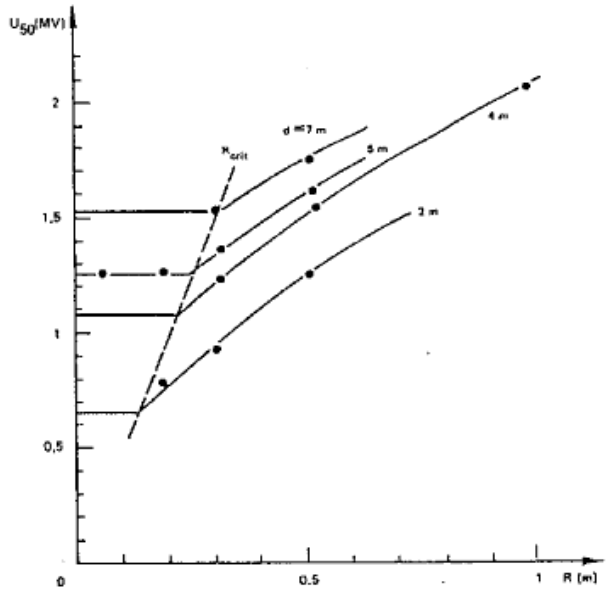

Figure 2 Influence of the radius R of spherical electrodes on U_{50} under positive polarity [2].

From fig. 2 it can be seen that for air gaps of 2 metres and up the critical radius is R > 0.1 metres i.e. for the majority of practical problems, the anode radius is less than the critical radius. In this case the dielectric withstand strength only depends on the length of the air gap, which means that for most practical air gaps the rod-plane gap stays valid as a reference gap when determining the gap factor.

4.2 Actual air gaps

The gap factor k_g, originally proposed by L. Paris and R. Cortina [**1**] in 1968, is the relation of flashover voltage for a rod-plane gap and a practical air gap of identical gap length, d. They noted that that all curves of U_{50} as a function of gap spacing d had essentially the same shape for a tower configuration and a rod-plane gap. A conductor-plane gap, which has shown to have the same tendency as a rod-plane gap, provided a good basis for determining the electrical properties of actual air gaps with a reference to the well known rod-plane configuration. In 1967 Luigi Paris published the IEEE research article "Influence of Air Gap Characteristics of Line-to-Ground Switching Surge Strength" [**3**]. The research work was performed by applying impulse waves simulating switching surges. The main purpose of the research was to investigate the dependence of air gap switching surge performance upon gap geometry. Most of the tests were made with a 120/4000 µs impulse wave since this particular wave shape is recognized for having the lowest positive polarity withstand voltage for rod-rod and rod-plane gaps. On the basis of the test results there was drawn some conclusions about the influence of the electrode shape to the electric withstand strength U_{50} of air gaps. On the basis of the test results the author proposed the gap configurations with the corresponding gap factors, k_g given in table 1.

4.2.1 Paris and Cortina

In 1968 Luigi Paris and Rosario Cortina published the IEEE research article "Switching and Lightning Impulse Discharge Characteristics of Large Air gaps and Long Insulator Strings" [**1**]. This article was published as a second part of the article written by L. Paris the previous year, and also includes the behaviour of air gaps when exposed to the 1.2/50 µs lightning impulse. One of the discoveries they made was that the impact of the shape of the electrodes to the discharge voltage for lightning impulses is similar in behaviour to that seen for switching impulses, when there is no insulator string between the electrodes. However, the influence of electrode shape is less significant for lightning impulses in air gaps without an insulator string through it. They also found that the shape of the insulators in an insulator string has a very slight influence on the behaviour of the air gap, meaning that introducing an insulator string between the electrodes can be considered in general, leaving the type of insulator out of consideration. For lightning impulses applies that the influence of the electrode shape is much greater in the case of air gaps with an insulator string between the electrodes. The article concludes that the gap factor k_g is not sufficient for definition of the behaviour of air gaps with an insulator string through it when the air gap is exposed to lightning impulses with positive or negative polarity under dry and wet conditions, and in dry conditions for negative polarity switching impulses. Negative polarity impulses are however not interesting in this context since the flashover voltage in an air gap is considerably higher in this case. On the basis of the research work they proposed the semi-empirical formula:

$$U_{50}(d) = 500S^{0.6}\left[kV\right] \tag{4.1}$$

for determining the discharge voltage U_{50} of an rod-plane air gap of two to seven metres for a positive polarity switching impulse where U_{50} is in kV and d in meters.

By applying the gap factor, k_g to the formula, it is valid for all air gaps that are characterized by a gap factor:

$$U_{50}(d) = 500k_g S^{0.6}\left[kV\right] \tag{4.2}$$

For developing equation 4.1 the authors used a positive switching impulse with a wave shape 120/4000 µs which is considered as the most critical wave shape for rod-rod and rod-plane gaps. Thus, the equation is not based on the same wave shape as the one used to define the switching impulse in the EN-standard of 250/2500 µs.

In the IEEE research report "Influence of Air Gap Characteristics on Line- to Ground Switching Surge Strength" [**3**], a selection of typical gap configurations was presented as shown in table 1. The gap factors for the different air gap configurations suggested in table 1 were developed through several disruptive discharge tests where a switching impulse wave of 120/4000 µs, recognized for having the lowest positive polarity withstand voltage for rod-rod and rod-plane gaps, was used.

Table 1 Air gap configurations and their respective gap factors proposed by L. Paris [3].

Electrodes		Test arrangement	Gap factor, k_g	
Energized	Grounded		Without insulator string	With I- and V-insulator string
Rod	Plane		1.00	1.00
Rod	Structure (under)	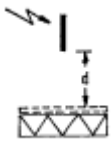	1.05	
Conductor	Plane		1.15	
Conductor	Window		1.20	1.15
Conductor	Structure (under)	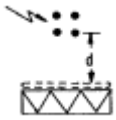	1.30	
Rod	Rod (h = 3 m under)	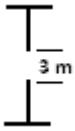	1.30	
Conductor	Structure (over and laterally)	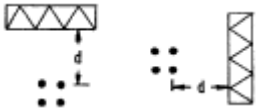	1.35	1.30
Rod	Rod (h = 6 m under)	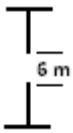	1.40	
Conductor	Rope		1.40	
Conductor	Rod (h = 3 m under)		1.65	
Conductor	Cross arm end			1.50
Conductor	Rod (h = 6 m under)		1.90	
Conductor	Rod (over)	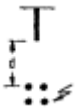	1.90	1.75

4.2.2 Cigré 72 technical bulletin

As it appears from the IEEE research article "Switching and Lightning Impulse Discharge Characteristics of Large Air gaps and Long Insulator Strings" [**1**], the gap factor depends on the type of electrical stress the air gap is exposed to. In air gaps without insulator string, both switching- and lightning impulses can be described by a gap factor. The Cigré 72 technical bulletin suggests gap factors for lightning impulses and continuous power frequency voltage named k_{g_ff} (ff = fast front wave) and k_{g_pf} (pf = power frequency) respectively. The gap factors k_{g_ff} and k_{g_pf} are derived from the switching impulse gap factor as follows:

When the air gap is exposed to a lightning impulse, the gap factor k_{g_ff} is expressed in terms of k_g as:

$$k_{g\_ff} = 0.74 + 0.26k_g \tag{4.3}$$

When the air gap is exposed to power frequency voltage, the gap factor k_{g_pf} is expressed in terms of k_g as:

$$k_{g\_pf} = 1.35k_g - 0.35k_g^{\ 2} \tag{4.4}$$

In some literature including the EN-standards, the gap factor for switching impulse is named k_{g_sf} (sf = slow front wave). This is however the same gap factor as the k_g given in tables for gap factors such as table 1 and the tables for gap factors found in the EN-standards, i.e. the gap factors are primarily given for switching impulses so that $k_{g\_sf} = k_g$.

Conductor cross arm is the air space that represents the insulation of the outer phase in a tower. The insulation consists of two air gaps, d_1 which is conductor-cross arm end and d_2 which is conductor-structure (laterally) ref. table 1.

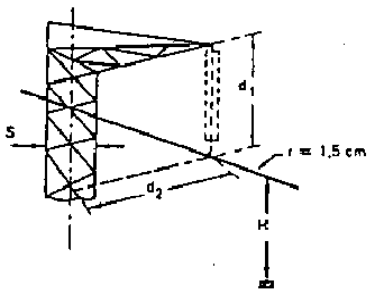

Figure 3 Conductor-cross arm [2].

The Cigré 72 technical bulletin suggests the following formula for the gap factor of the conductor-cross arm configuration:

$$k_g = 1.45 + 0.015(\frac{H}{d_1} - 6) + 0.35(e^{-8\delta/d_1} - 0.2) + 0.135(\frac{d_2}{d_1} - 1.5) \tag{4.5}$$

Applicable in range:
d_1=2-10 m
d_2/d_1=1-2
δ/d_1=0.1-1
H/d_1=2-10

where

K_g – gap factor
H – height from phase to ground
d_1 – length of the insulator string
d_2 – distance from phase to tower pole
δ – with of the tower pole

This formula will in most cases give a gap factor close to 1.45. Comparing this with table 1, the two air gaps, d_1 conductor-cross arm end and d_2 conductor-structure (laterally), have the gap factors 1.50 and 1.35 respectively. In practice the air gap conductor-cross arm end with k_g = 1.50 will be the determinant air gap since in most cases $d_1 < d_2$. In this case the formula 3.5 complies well with the suggested gap factors in table 1.

Conductor-tower window is the air space that represents the insulation of the mid phase. The air space inside the tower window may be seen as multiple air gaps with a strike length d. The tower window of figure 4 can mainly be divided into three air gaps: conductor-structure (over), conductor-structure (laterally) and conductor-rope (guy wire) ref. table 1.

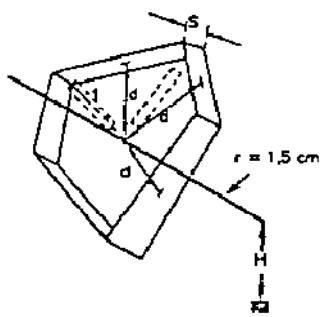

Figure 4 Tower window [2].

The Cigré 72 technical bulletin suggests the following formula for the gap factor of the conductor-tower window configuration:

$$k_g = 1.25 + 0.005(\frac{H}{d} - 6) + 0.25(e^{-8\delta/d} - 0.2) \tag{4.6}$$

Applicable in range:
d=2-10 m
δ/d=0.1-1
H/d=2-10

where

K_g – gap factor
H – height from phase to ground
d – distance from phase to tower construction
δ – with of the tower pole

This formula will in most cases give a gap factor close to 1.25. If instead using table 1 to determine the gap factor of the tower window, one obtain the three air gaps, conductor-structure (over with insulator string), conductor-structure (laterally) and conductor-rope, having the gap factors 1.30, 1.35 and 1.40 respectively. Unlike the conductor-cross arm configuration of the outer phase, the distances from conductor to structure are approximately the same in the air space of the tower window. In this case all of the three mentioned air gaps will be determinant for the insulating strength and might be treated individually rather than as a single air gap.

In this case the formula 3.6 complies only partly with the suggested gap factors in table 1, as it appears lower than the lowest single gap factor of the tree air gaps from table 1.

As a first approximation, as the lowest single gap factor of the three mentioned gaps is 1.3, it makes sense to use a common gap factor for the tower window of 1.25 as a conservative value when designing new transmission lines. When it comes to voltage upgrading, the air clearances within the tower is limited, making it interesting to examine all relevant air gaps within the tower window.

As stated earlier, it is desirable that in case of a flash over, the strike should go to the cross arm rather than to the fragile guy wires. According to the gap factors in table 1, the conductor-guy wire air gap has an electrical withstand strength of 7-8 % higher than conductor-cross arm, given that the air gaps are of identical length. This might be explained by the statement that a conductor and thus a guy wire or a rope, has approximately the same properties as a rod in an air gap. The conductor-structure gap will thus have the same tendency as a rod-plane gap, while the conductor-guy wire gap will have the same tendency as a rod-rod gap which is known for having higher break down strength than the rod-plane gap.

As already mentioned, the standards for insulating coordination recommend a gap factor of k_g = 1.25. If instead dividing the tower window into the three mentioned air gaps with k_g = 1.3, 1.35 and 1.4 one might get a more accurate description of the characteristics of the air gap and hence to which part of the tower construction the strike is most likely to go.

In the standards for insulation coordination, the required withstand voltage, U_{rw} for lightning- and switching impulses is set to be the voltage that gives a 10 % probability for flash over to occur in the air gap i.e. $U_{rw} = U_{10}$. This value is obtained by moving 1.3 standard deviations down from U_{50} on the probability curve in fig. 5, ending up at 10 % probability for flash over. Required withstand voltage is calculated by the formula:

$$U_{rw} = U_{10} = U_{50} - 1.3Z\left[kV\right] \tag{4.7}$$

where

Z is the standard deviation
for lightning impulses Z = 0.03 U_{50}
for switching impulses Z = 0.06 U_{50}

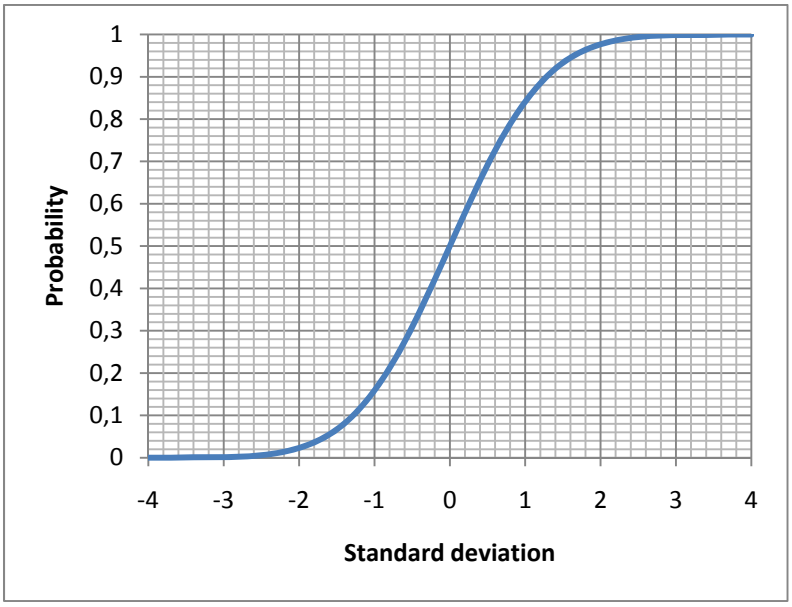

Figure 5 Probability for flash over as a function of voltage amplitude given as standard deviations.

If the conductor-traverse air gap, which has the lowest gap factor, k_g = 1.3 is used as a reference gap, this air gap should give a 10 % probability for flash over. One will then obtain the following probabilities for the two other air gaps to have a flash over:

Conductor-tower pole, k_g = 1.35

$$U_{50\_k_g 1.35} = \frac{1.35}{1.30} U_{50\_k_g 1.30} = 1.04 U_{50\_k_g 1.30} \left[kV\right] \tag{4.8}$$

Knowing that the standard deviation, Z = 0.06 U_{50} for switching impulses, the gap factor of the conductor-tower pole corresponds to 2/3 of the standard deviation for switching impulses. Adding the 2/3 to the 1.3 gives 1.97 standard deviations, which correspond to a probability for flash over of 2.5 % on the probability curve in fig. 5.

Conductor-guy wire, k_g = 1.40

$$U_{50\_k_g 1.40} = \frac{1.40}{1.30} U_{50\_k_g 1.30} = 1.08 U_{50\_k_g 1.30} \left[kV\right] \tag{4.9}$$

-corresponds to 4/3 of the standard deviation for switching impulses. Adding the 4/3 to the 1.3 gives 2.63 standard deviations, which correspond to a probability for flash over of 0.5 % on the probability curve in fig. 5.

Using the method for determine required withstand strength described in the standard for insulating coordination in combination with the gap factors proposed in table 1, there are a 10 % probability for the flash over to occur over the insulator string to traverse, 2.5 % probability for the flash over to occur towards the tower pole and 0.5 % probability for the flash over to occur towards the guy wire. To what extent these results are valid for actual cases of tower windows has to be determined by laboratory testing. It is also important to point out that this is only valid in cases of switching impulses. The standards use the same method for determine required withstand strength of lightning impulses. However, the great uncertainty on the behaviour of lightning strikes in air gaps having an insulator string through it makes it impossible to relate the probability for flash over to gap the factors. This is discussed in the next chapter; “Influence of insulators”. As the lightning strikes seem to act highly unpredictable in such cases , the guy wire should be protected in cases where the dimensions in the tower window are tight and the distance from the conductor to traverse is equal to conductor guy wire. This, among other solutions, is discussed in the chapter “Alternative measures for tight towers”.

4.3 Influence of insulators

To what extent the insulator string affects the electric properties of an air gap depends on the wave shape of the voltage the air gap is exposed to. Different literature agree on that in the case of positive polarity switching impulses, the introduction of an insulating medium between the electrodes causes only a slight change in the behaviour of the air gap and thus the gap factor. As for lightning impulse, the presence of insulators between the electrodes may play an important role on the discharge process, thus also heavily affecting the statistical withstand voltage U_{50}.

There are mainly two different configurations of cap and pin insulator strings that are used in overhead lines, I-string and V-string. As the name indicates, the I-string configuration consists of a single vertically string of cap and pin insulators, while the V-string configuration consists two strings with an angle of 45°, forming a V-shape. In the case of cap and pin insulator strings, the field distribution is evenly distributed by the metallic caps and pins.

Given experimental error, the statistical uncertainty and the imprecise nature of the evaluation of geometrical characteristics of the insulator-less air gap, the presence of dry cap and pin insulators in the air gap can be said to not have a significant impact with respect to the dielectric strength when exposed to slow front impulse waves such as a switching impulse. Cigré report 72 indicates an influence less than 3 % [**2**]. For an air gap where cap and pin insulators are present, the gap factor is given by:

$$k_t = \left[0.85 + 0.15 e^{-(k_g - 1)} \right] k_g \tag{4.10}$$

where k_g is the gap factor for an air gap with no insulator string going through it.

This formula indicates a slight decrease of the withstand strength of air gaps where insulators are present.

The Paris/Cortina research article “Switching and Lightning Impulse Discharge Characteristics of Large Air gaps and Long Insulator Strings” [**1**] concludes that the factor k_g is not sufficient to define the behaviour of air gaps with insulator strings when the air gap is exposed to lightning impulses with positive or negative polarity under dry and wet conditions, and in dry conditions for negative polarity switching impulses. For these conditions the authors noted that the behaviour of the discharge in the air gap did not seem in any way to be connected with the gap factor. Since insulating coordination is based on the most severe case of switching- and lightning impulses, only the positive polarity impulses are considered. Thus, for all practical purposes, the gap factor is not sufficient to describe the discharge characteristics of air gaps with insulator strings exposed to lightning impulses.

Test results from the research work presented in Cigré report 72 show the same tendencies where there is a lack of correlation between U_{50} and gap factors under these conditions. Further more, the test results showed that the influence of cap and pin insulators is reduced when the stress on the first insulator at both extremities of the string is reduced using shielding rings.

4.4 Influence of rain

Tests which have been carried out show that rain, as a perturbation of the insulation medium, has no significant effect on the dielectric strength of air gaps. However, due to streaming of water, the rain can modify the shape of the electrodes by formation of cascades of water droplets along the insulator string and accordingly decrease the dielectric strength of an air gap [**2**]. The influence of rain tends to be more present in I-insulators than to V-insulators as the angle of the V-insulator makes the rain drain away more efficiently. For an air gap where the combination of cap and pin insulators and rain are present, the gap factor is given by:

$$k_{wet} = \left[1 - 0.54 e^{-\frac{1}{k_t - 1}} \right] k_t \tag{4.11}$$

where k_t is the gap factor for an air gap where cap and pin insulators are present.

Formula 3.11 indicates a slight decrease of electric withstand strength in wet conditions.

4.5 Conclusion of the chapter

An air gap in a transmission tower can be seen as a complex air gap with multiple electrodes. This applies especially for the tower window (see part 4.2.2 fig. 4). Hence, the tower window might be described more accurately by the three gap factors k_g = 1.3, 1.35 and 1.4 found in table 1.

Using the method for determine required withstand strength $U_{rw} = U_{10}$ will result in a 10 % probability for the flash over to occur over the insulator string to traverse, 2.5 % probability for the flash over to occur towards the tower pole and 0.5 % probability for the flash over to occur towards the guy wire.

There is great uncertainty about the behaviour of a flash over in air gaps with insulators exposed to lightning impulses. Thus, the relationship between electrode shapes and gap factors is hard to define for this wave shape (see part 4.2.1).

5 Minimum air clearances

When upgrading the voltage, new requirements are set to the insulation strength. When specifying these requirements, the goal is not only to select the new insulation strength, but also to select the *minimum* insulation strength or minimum air clearance. Minimum air clearance is directly connected to the cost, since the minimum air clearance is what determines whether a tower has to be modified or not. Figure 6 shows a tower with clearance circles that illustrates the minimum air clearances for the three operation conditions:

1. No wind. Minimum air clearance determined by lightning impulse.
2. 3 years wind. Minimum air determined by switching impulse.
3. 50 years wind. Minimum air clearance determined by 50 Hz system voltage peak value ($\sqrt{2}U_s$).

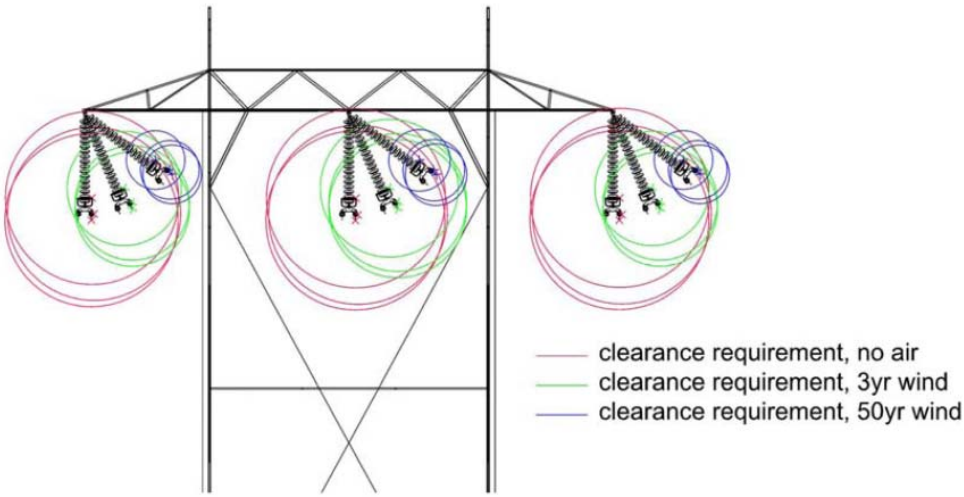

Figure 6 Minimum air clearances for three different operating conditions.

The calculations of the required air clearances for switching and lightning over voltages, phase to earth and phase to phase, D_{el} and D_{pp}, and for the operating voltage phase to earth and phase to phase, $D_{50Hz\_p\_e}$ and $D_{50Hz\_p\_p}$ in the standard EN 50341 [**4**] are based on ENV 50196 supported by EN 650071-1, EN 60071-2 [**5**] and Cigré report 72 "Guidelines for the evaluation of the dielectric strength of external insulation" [**2**].

The dielectric strength in an air gap depends on such factors as electrode geometry, spacing and the shape and polarity of the voltage impulse. The break down voltage is lower for an impulse with positive polarity than for an impulse with negative polarity. The breakdown voltage with lightning impulses increases approximately proportionally to the spacing, while it increases considerably more slowly with positive switching impulses and large spacing. Consequently at higher system voltages ≥300 kV where there are large air gap spacing in the towers, switching impulse plays a greater role in insulation design than lightning impulse [**6**].

The formulas for $U_{50\%}$ for switching- and lightning impulse and power frequency voltage in air gaps given in EN 50341 [**4**] are derived from experiments of a rod-plane gap as the electrode configuration. The formulas are given by:

U_{50} for a rod-plane gap configuration for switching impulses or slow front wave impulses:

$$U_{50rp\_sf} = 1080 \ln\left(0.46d + 1\right)\left[kV\right]; d\left(m\right) \tag{5.1}$$

U_{50} for a rod-plane gap configuration for lightning impulses or fast front wave impulses:

$$U_{50rp\_ff} = 530d\left[kV\right]; d\left(m\right) \tag{5.2}$$

U_{50} for a rod-plane gap configuration for 50 Hz power frequency voltage:

$$U_{50rp\_50Hz} = 750\sqrt{2} \ln\left(1 + 0.55d^{1.2}\right)\left[kV\right]; d\left(m\right) \tag{5.3}$$

In a high voltage tower the electrodes are represented by lines and tower construction. Gap factors given in the standard EN 50341 correct for the discrepancy between the geometry of the various "electrodes" at the appropriate air gaps in towers and the rod-plane gap. Consequently the formulas for U_{50rp} have to be multiplied by a certain gap factor to determine the withstand strength in a certain part of a tower.

6 Wind

6.1 Effect of wind on I-strings

I-strings are normally not constrained from movement caused by wind. Wind can move the conductor closer to the tower, thus decreasing both the strike distance to the tower pole, guy-wire and traverse. Reduced strike distance leads to decrease of U_{50}, thus increasing of SSFOR (Switching Surge Flashover Rate). A research work conducted by EFI in1971 [**7**] found that the withstand strength of an air gap tends to reduce gradually with increased insulator swing. The U_{50} is reduced by 4 % at 10° swing and 17 % at 30° swing. Further they found that at 10° swing the flash over occurred along the insulator, while for 20° swing, the flash over mostly occurred to the traverse through the air.

In the eastern part of Norway the 3 year wind is normally 25 m/s and the 50 year wind is 32 m/s. This wind speed normally corresponds to swing angles of approximately 30° and 50° respectively.

The SSFOR for an I-string can be calculated by considering each wind speed and its probability of occurrence.

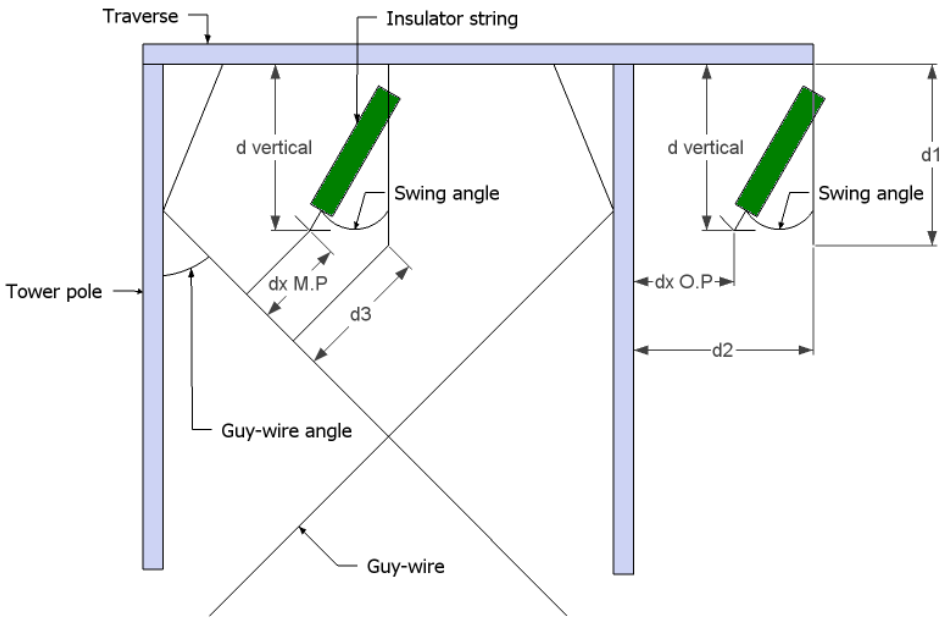

Figure 7 Wind moves the conductor toward the tower.

For a wind speed v impinging on the conductor, the swing angle α_S is

$$\alpha_S = \tan^{-1}\left(k_1 v^{1.6}\right) \tag{6.1}$$

where

$$k_1 = \left(1.138 \cdot 10^{-4}\right)\frac{D/W}{V/H} \tag{6.2}$$

and

D = conductor diameter in cm, W = conductor weight in kg/m, V = vertical span length (fig. 8), H = horizontal span length (fig. 8) and v = wind speed.

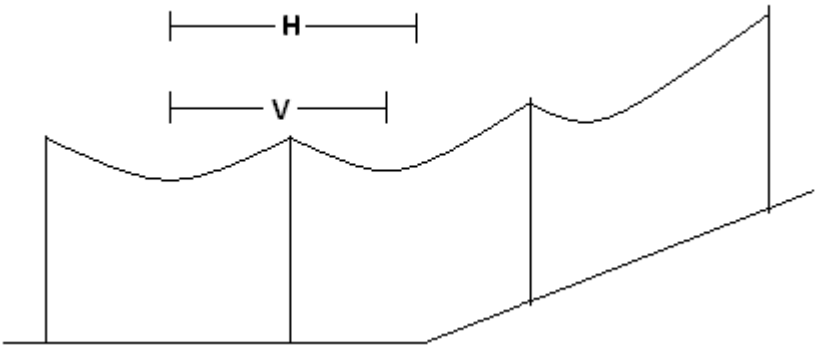

Figure 8 Vertical and horizontal span lengths. V is the length between the lower points of the line within two spans while H is the length between the middle of two spans.

For calculation of swing angles of the insulator strings a program named PLS-CADD which is a computer program with graphical user interface used for designing of overhead power lines. Figure 9 shows the angles of the insulator strings in a tower at no wind conditions, 3 years wind conditions and 50 years wind conditions.

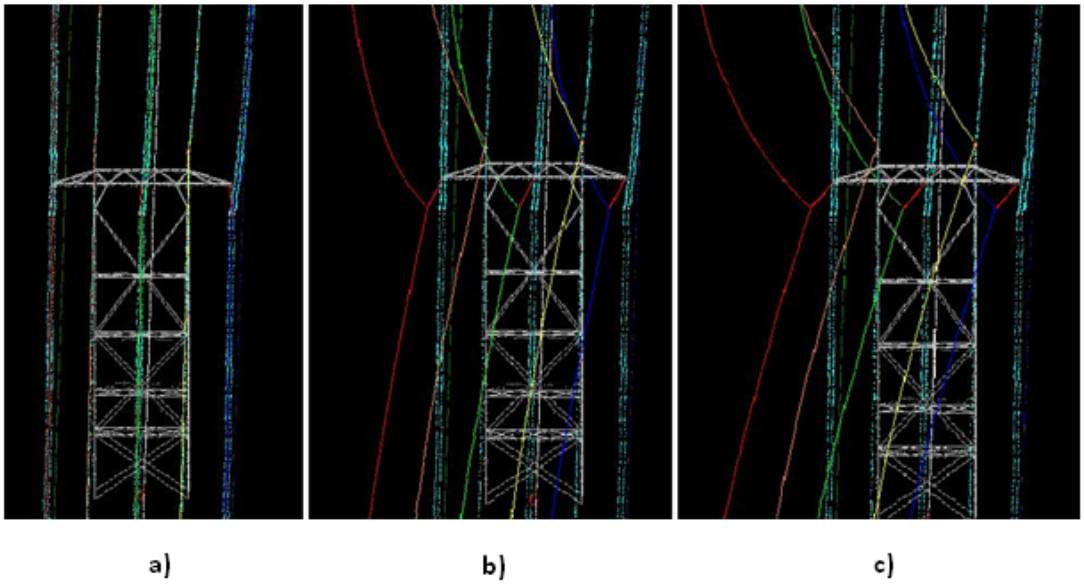

Figure 9 Calculations of swing angles of the insulator strings in PLS-CADD at a) no wind, b) 3 year wind and c) 50 year wind.

7 Towers

7.1 Modification of towers

To allow 420 kV in 300kV towers the insulator strings have to be extended by two to four insulators, depending on the space available in the tower window and whether it is a I-string as in fig. 10 or a V-string as in fig. 11. In any case it applies that extension of insulator strings reduces the distance and thus the safety margins toward the guy wires. Each of the towers in a transmission line is unique with respect to its dimensions, meaning that the security margins will vary from one tower to another.

Some towers fulfill the requirements without the need for further investigation of the safety margins, while other towers will definitely have to be modified to be able to be upgraded. For every other tower between these two cases, one will have to evaluate each tower particularly.

The towers can thus be divided into three categories:

1. Ok
2. Case of doubt
3. Not ok

Figure 10 Extension of an I-string insulator.

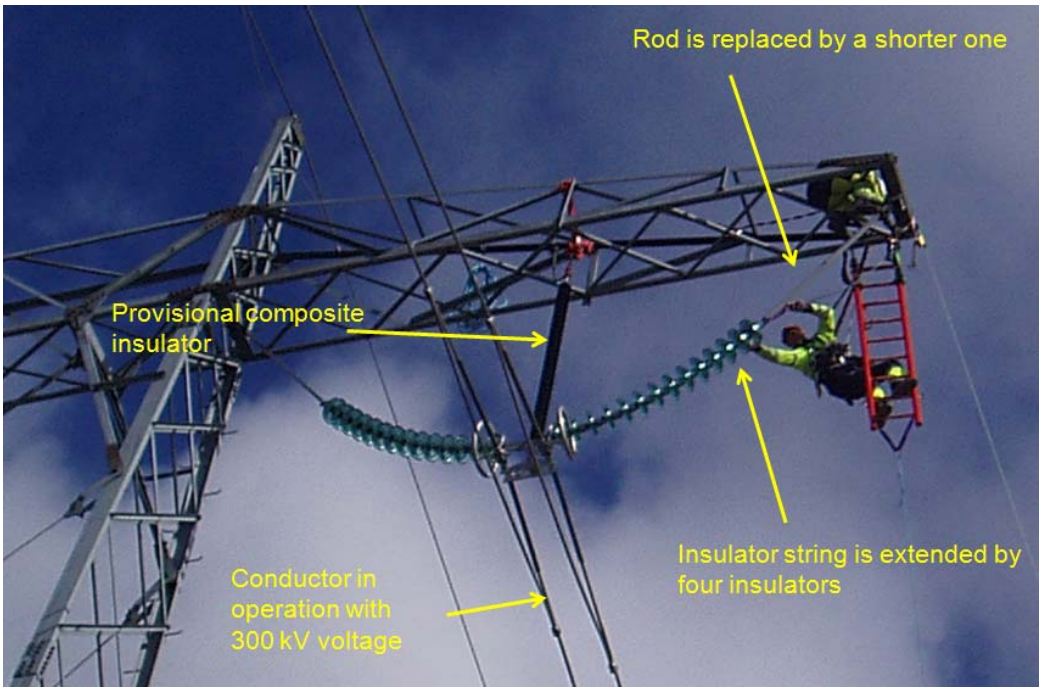

Figure 11 Extension of a V-string insulator.

7.2 Alternative measures for narrow towers

For towers covered by category 1 no measures are needed other than extension of the insulator strings.

Towers covered by category 2 require a closer investigation of the tower to identify the most critical air gap. When this is identified one can start evaluating possible measures. In such cases it might be enough to just do some minor changes, such as replacing existing fitting equipment located between phase and insulator with more compact equipment, as illustrated in fig. 12 will gain a limited distance in the air gap.

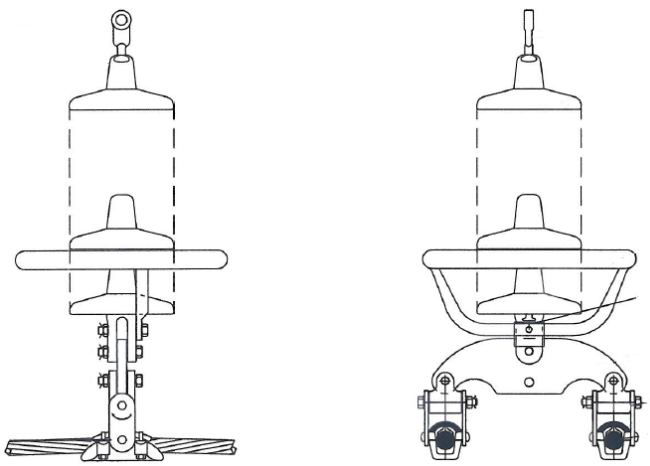

Figure 12 Fitting equipment between phase and insulator.

Towers covered by category 3 require more extensive modification of the tower to be upgraded. Supporting insulator is a solution where two composite insulators forming a V as shown in fig. 13 and 14. It locks the I-string insulator, preventing it from swinging towards the tower side at windy conditions. This solution is used on tension towers as well to support the loop preventing it from moving towards the tower construction as shown in fig. 13. An alternative is to replace the I-string insulator with an ordinary V-string insulator seen in fig. 11.

Figure 13 Tower window of a tension tower with supporting insulator.

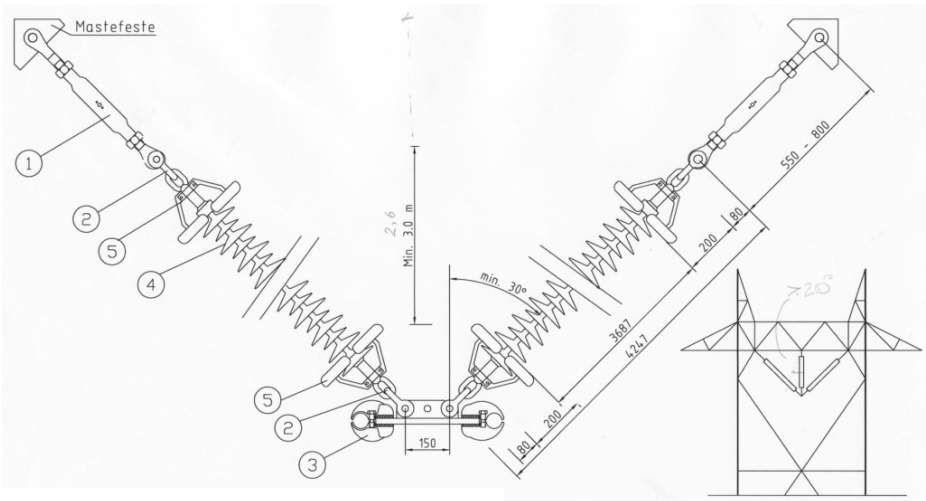

Figure 14 Supporting insulator.

Armour rod (fig. 15) is a helical steel protection that is wound around the guy wire to protect it from damage caused by arcs. This solution is used when there is an uncertainty on where in the tower window a flash over will take place. In practice this is done in towers where the air clearance between phase and traverse is equal to the air clearance between phase and guy wire in the tower window.

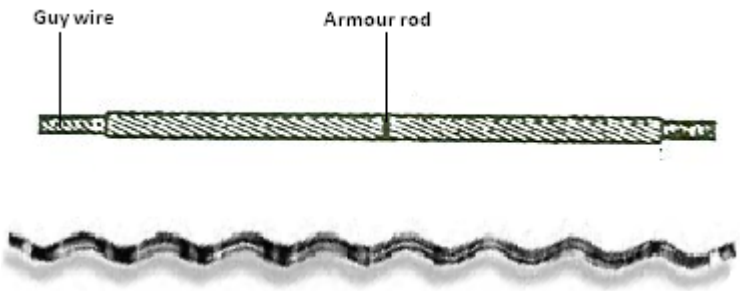

Figure 15 Armour rod.

8 Air gap-insulator configurations

This chapter investigates four different insulator/air gap configurations. The minimum air clearances required by the EN standard, U_{50} and gap factors in dry and wet conditions are investigated for different type of electrical stress and swing angles.

8.1 Four different alternative configurations

Transmission lines designed for voltage levels of 420 kV will normally have insulator strings of 18 insulators. Due to lack of space in the voltage upgraded transmission lines, it is found expedient to use insulator strings of 17 insulators to obtain sufficient reliability. However, depending on the size of the towers one might even not have enough space for an insulator string of 17 insulators. In towers with tight dimensions, one must go down to 16 insulators to provide sufficient distance between phase and guy-wire.

In the cases of tight dimensioning, one has to accept that there is a higher probability for a flash over to occur in cases of over voltages. It is therefore of great importance to dimension the insulator/air gap relation in a way that any flash over finds its way to the traverse, rather than to the guy-wire which might burn off. Four different insulator/air gap relations for the mid-phase tower window have been proposed by Statnett:

Table 2 Insulator- and air gap configurations.

Configuration	No. of insulators	Length of insulator string in metres	Distance to guy-wire in metres
1	16	2.55	2.55
2	16	2.55	2.7
3	17	2.72	2.72
4	17	2.72	2.9

The choice of insulator length versus distance to guy wire will be compromises of the electrical withstand performance of the tower at different operating conditions. The insulator string consisting of 16 insulators will give poorer performance in case of a lightning strike and no wind than an insulator string of 17 insulators. However, a shorter insulator string might perform better in windy conditions as the swing radius is less for a shorter string. This is investigated further by determining U_{50} for a selection of different swing angles for the four before mentioned insulator- /air gap configurations. It can be seen from the table that each swing angle corresponds to a specific operating situation, i.e. type of electrical stress. Based on information data from the Kristiansand – Arendal transmission line, the following assumptions for the most severe case of electric stress to the towers are found most appropriate:

- Stress caused by lightning impulse is most likely to occur at no wind conditions. However, calculations are done for static line angles up to 10° which is the case for some of the towers in line.
- Stress caused by line switching impulse is most likely to occur for swing angles up to 30°.
- Stress caused by power frequency operating voltage is most likely for swing angles up to 40°. The maximum amplitude of the power frequency voltage is the system voltage.

The calculations of minimum required air clearances, statistical withstand strength voltage U_{50} and gap factors are done by an excel sheet made for this project. The formulas used for calculation of the air clearances and the statistical withstand strength voltage U_{50} are the formulas that are given in EN 50341 [**5**], while the formulas used for calculation of gap factors are taken from the Cigré report 72 [**2**] which the EN standard is based on. Air clearances, U_{50} and gap factors are investigated for various swing angles of the insulator string for the four before mentioned tower configurations. Calculations are done for the air gap between phase and guy wire and the air gap between phase and traverse. U_{50} and gap factors are also investigated over the insulator string in dry and wet conditions, while the air gaps are calculated for dry conditions. Calculations are done for lightning impulses (LI), switching impulses (SI) and power frequency voltage (PF). The switching over voltage is assumed to be 1.83 PU and the operating voltage is 420 kV. The tower is assumed 25 metres high, has a guy wire angle of 40°* and is located at an altitude of 500 metres above sea level.

*The guy wire angle is the angle between guy wire and tower pole as shown on fig. 7. The air clearance in the mid phase as a function of the insulator swing angle is also dependent on the angle of the guy wire.

Table 3 shows the relationship between swing angles and air clearance for configuration 1-4, with a guy wire angle of 40°. The minimum air clearances is between phase and guy wire, hence these air clearances are compared to minimum required air clearances according to EN standard. The compared clearances are marked with bold front.

Table 3 Air clearances for configuration 1-4 and minimum required air clearances.

Configuration Ref. table 3	Type of impulse	**Min. required air clearance according to EN**	Swing angle	**Distance Phase- guy wire**	Distance Phase-traverse
1	LI	**2.687 m**	0°	**2.55 m**	2.55 m
1	LI	**“**	10°	**2.236 m**	2.511 m
1	SI	**1.907 m**	20°	**1.981 m**	2.396 m
1	SI	**“**	30°	**1.793 m**	2.208 m
1	PF	**0.834 m**	40°	**1.678 m**	1.953 m
2	LI	**2.687 m**	0°	**2.7 m**	2.55 m
2	LI	**“**	10°	**2.360 m**	2.511 m
2	SI	**1.913 m**	20°	**2.106 m**	2.396 m
2	SI	**“**	30°	**1.916 m**	2.208 m
2	PF	**0.835 m**	40°	**1.799 m**	1.953 m
3	LI	**2.866 m**	0°	**2.72 m**	2.72 m
3	LI	**“**	10°	**2.358 m**	2.679 m
3	SI	**1.914 m**	20°	**2.113 m**	2.556 m
3	SI	**“**	30°	**1.912 m**	2.356 m
3	PF	**0.835 m**	40°	**1.790 m**	2.084 m
4	LI	**2.866 m**	0°	**2.9 m**	2.72
4	LI	**“**	10°	**2.531 m**	2.679 m
4	SI	**1.920 m**	20°	**2.262 m**	2.556 m
4	SI	**“**	30°	**2.060 m**	2.356 m
4	PF	**0.837 m**	40°	**1.935 m**	2.084 m

Table 3 shows that:

- Minimum required air clearance according to EN standard for all of the three impulse types, LI, SI and PF, is achieved with configuration 2 and 4 where the air gap between phase and guy wire is greater than the length of the insulator string.
- Configuration 1 and 3 does not fulfill EN standard requirement for minimum air clearance when exposed to lightning impulses (LI).
- For all configurations, the distance between phase and guy wire, which is the least durable air gap, is also the shortest one at swing angles exceeding 10°.

Table 4 Conductor – cross arm calculated for a 250/2500µs positive switching impulse, (SI) under dry and wet conditions. Gap factors are given in parentheses. Altitude of 500 m, tower height = 25 m, guy wire angle of 40°.

Configuration Ref. table 3	Type of impulse	Swing angle	**U_{50} Phase-guy wire**	U_{50} Phase-traverse	U_{50} Dry insulator	U_{50} Wet insulator
1	LI	0°	**1428 (1.057)**	1416 (1.048)	1416 (1.048)	1416 (1.048)
1	LI	10°	**1253 (1.058)**	1407 (1.057)	"	"
1	SI	20°	**859 (1.228)**	979 (1.220)	991 (1.182)	989 (1.180)
1	SI	30°	**801 (1.233)**	926 (1.223)	"	"
1	PF	40°	**848 (1.135)**	961 (1.130)	1082 (1.030)	1082 (1.030)
2	LI	0°	**1448 (1.057)**	1416 (1.048)	1416 (1.048)	1416 (1.048)
2	LI	10°	**1322 (1.057)**	1407 (1.057)	"	"
2	SI	20°	**896 (1.225)**	979 (1.220)	991 (1.182)	989 (1.180)
2	SI	30°	**839 (1.230)**	926 (1,223)	"	"
2	PF	40°	**899 (1.133)**	961 (1.130)	1082 (1.030)	1082 (1.030)
3	LI	0°	**1523 (1.056)**	1510 (1.048)	1510 (1.048)	1510 (1.048)
3	LI	10°	**1336 (1.057)**	1500 (1.056)	"	"
3	SI	20°	**898 (1.225)**	1022 (1.218)	1035 (1.181)	1033 (1.178)
3	SI	30°	**838 (1.229)**	967 (1.220)	"	"
3	PF	40°	**895 (1.132)**	1011 (1.129)	1136 (1.030)	1136 (1.030)
4	LI	0°	**1546 (1.056)**	1510 (1.048)	1510 (1.048)	1510 (1.048)
4	LI	10°	**1418 (1.057)**	1500 (1.056)	"	"
4	SI	20°	**941 (1.222)**	1022 (1.218)	1035 (1.181)	1033 (1.178)
4	SI	30°	**882 (1.226)**	967 (1.220)	"	"
4	PF	40°	**953 (1.130)**	1011 (1.129)	1136 (1.030)	1136 (1.030

Table 4 shows that:

- The same trend is repeated for all of the four insulators- /air gap configurations: U_{50} is decreasing with increasing swing angle while the gap factor is increasing with increasing swing angle.
- The variations of the value of the gap factors are insignificant compare to the variations of U_{50}. In theory this results indicate that a change in the geometry of the tower has negligible impact to the gap factor and thus to the value of U_{50}.
- Reduction of U_{50} is rather due to reduced clearance caused by increasing insulator swing angle. The air gap between phase and guy wire has the greatest loss of electrical withstand strength since this is the air gap that reduced the most as a function of increased swing angle.
- Configuration 2 and 4 perform better at insulator swinging than configuration 1 and 3. However, the desired property of having a greater U_{50} between phase and guy wire than the U_{50} between phase and traverse is only achieved when there is no swing angle.

9 Theory vs. laboratory testing

As a consequence of voltage upgrading, several towers will ending up having rather tight dimensions and hence lower security margins. Some of these towers might not have sufficient security margin according to standards. As mentioned earlier, it is not an absolute requirement to follow the standards as long as one can prove that the towers meet the requirements for safety set by the regulations. As a part of the documentation process laboratory experiments should be performed. A laboratory test should be done on a full scale test object, which in this case is a 300 kV transmission tower, and with the expected voltage levels and impulse types that a tower might be exposed to. This kind of laboratory tests are expensive, complicated and time consuming to perform and will not be included in this report. However, a full scale laboratory test under the direction of Statnett will be performed at a later stage. For this report, two existing laboratory reports have been used for investigation of tower insulation:

1. Conducted by STRI with the title: "Experimental dielectric tests on a porcelain insulator string with cap- and pin insulators type NGK CA500" [**8**].
2. Conducted by EFI (former SINTEF) with the title: "Luftisolasjon. Undersøkelse av elektrisk holdfasthet for linjeisolasjon" [**7**].

In this chapter statistical withstand voltage U_{50} and gap factors for different air gap configurations are investigated. The results from the two above mentioned reports are used as a basis for comparison to the standards.

9.1 Research report 1: STRI

In 2009 STRI [**8**], a Swedish accredited testing laboratory, did a research on the dielectric properties of insulator strings being exposed to different electrical stresses. Experimental dielectric tests were performed on a porcelain insulator string with cap- and pin insulators identical to the ones located in the transmission line Nea-Hjärpströmmen. The research was performed on request of Svenska Kraftnät. The test object used for this research work was simulating a tower window as shown in fig. 16.

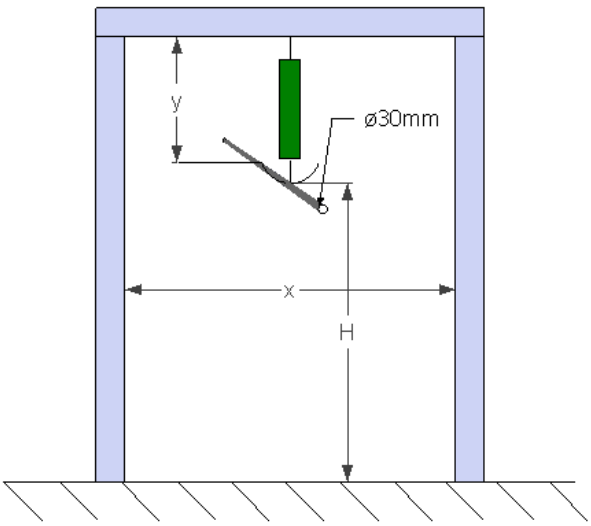

Figure 16 Test object simulating the tower window.

The test object consisted of:

- A porcelain insulator string consisting of y = 14 (1.8 m), 15 (1.96 m) and 16 (2.1 m) cap and pin insulators type NGK CA500 from the line Nea-Hjärpströmmen. The insulator string was fitted into the cross arm with original fitting details.
- The insulator string was mounted on a cross arm equipped with two vertical members with a distance of x = 7.2 m from each other, simulating the poles of the tower.
- The line was simulated by a 6 meter aluminium tube with diameter 30 mm, mounted on the original arching horn and details, fitted on the lower end of the insulator string.
- The distance from the power line to the ground is H = 6 metres.

The test was performed with the three impulse types

- Lightning impulse disruptive discharge test with positive polarity and dry conditions (LI dry).
- Switching impulse disruptive discharge test with positive polarity and wet conditions (SI wet).
- Power frequency disruptive discharge test for wet conditions (PF wet).

Test values of U_{50} from the STRI test report are compared with values calculated with the formulas for U_{50} given in the EN standard. The calculations are, as far as possible, carried out with the same conditions as the test conditions. Gap factors are corrected for insulators and rain. The following tables show a comparison between test results and calculations.

9.1.1 Lightning impulse

The lightning test was performed on an insulator string of 15 insulators corresponding to a flash over length of 1.96 m under dry conditions. The up- and down method was used to determine U_{50}.

Table 5 U_{50}, 50 % flashover probability for lightning impulse (LI dry).

Test	Number of insulators	U_{50} corrected test	U_{50} calculated conductor-window k_{dry}=1.041	Deviation between test and calculation referred to calculated values
LI dry	15	1216 kV	1081 kV	12.4 %

For the lightning impulse the deviation is 12.4 %. The calculations in the previous chapter indicated that the minimum air clearances for the lightning impulse were the most critical ones and required minimum air clearance could not be obtained for configuration 1 and 3.

In the standards for insulation coordination, the required withstand voltage, U_{rw} for lightning- and switching impulses are set to be the voltage that gives a 10 % probability for flash over to occur in the air gap i.e. $U_{rw} = U_{10}$. This value is obtained by moving 1.3 standard deviations to the left on the probability curve. For lightning impulse one standard deviation is 3 % of U_{50}. One will then end up at 10 % probability for flash over on the probability curve.

U_{rw} is determined by the formula

$$U_{rw} = U_{10} = U_{50} - 1.3Z\left[kV\right] \tag{9.1}$$

where Z is the standard deviation

Figure 17 shows the probability for a flashover to occur as a function of the magnitude of the lightning impulse for an insulator string of 1.96 m, corresponding to 15 insulators.

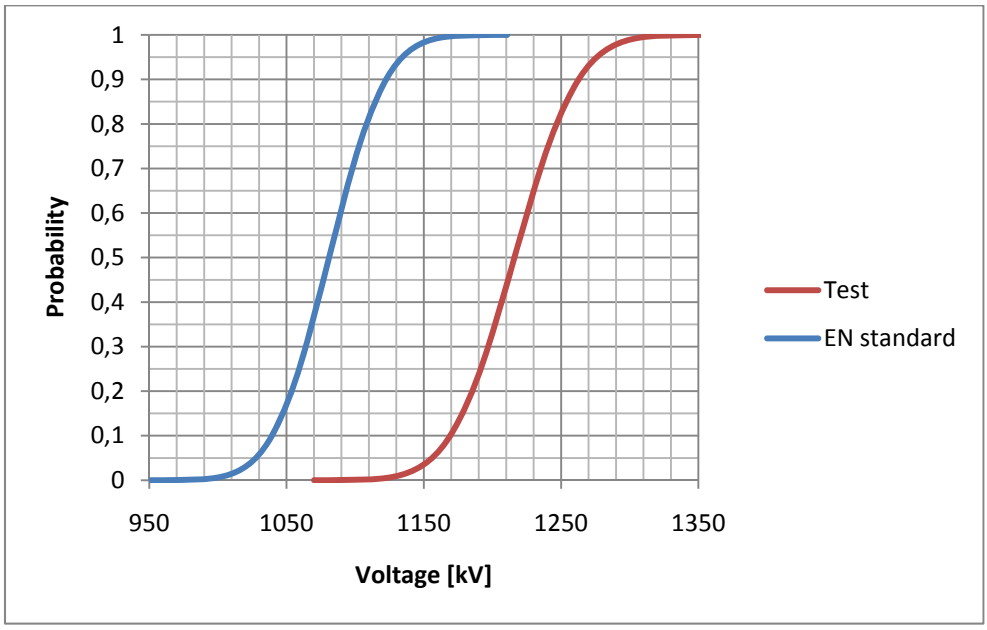

Figure 17 Cumulative normal distribution probability curves for flashover for lightning impulse (LI dry) and 15 insulators (1.96 m).

The difference between U_{50} and U_{rw} is 1.3 standard deviations, while the difference between the test result and calculation corresponds to approximately four standard deviations. If the value of U_{50} given by the blue curve that represent the standard is inserted into the formula for U_{rw}, we obtain the required withstand voltage:

$$U_{rw} = U_{10} = U_{50} - 1.3Z = 1081 - 1.3 \cdot 0.06 \cdot 1081 = 1039kV \tag{9.2}$$

where the standard deviation, Z = 0.03 U_{50}.

U_{10} of 1039 kV on the blue curve gives a probability of 10 % for flash over, while it gives a probability of $3.17*10^{-5}$ for flash over on the red curve that represents the laboratory test result.

Conclusion: The U_{rw}-value determined from the standards, which is supposed to have a probability of 10 % for a flash over to occur, has a much lower probability for occurrence according to the lightning impulse disruptive discharge test with 15 insulators.

9.1.2 Switching impulse

The switching test was performed under wet conditions on an insulator string of 14, 15 and 16 insulators corresponding to a flash over length of 1.8, 1.96 and 2.1 m respectively. The up- and down method was used to determine U_{50}.

Table 6 U_{50}, 50 % flashover probability for switching impulse (SI wet).

Test	Number of insulators	U50 corrected test	U50 calculated conductor-window kwet=1.155	Deviation between test and calculation referred to calculated values
SI wet	14	786 kV	753 kV	4.4 %
SI wet	15	851 kV	802 kV	6.1 %
SI wet	16	919 kV	843 kV	9.0 %

The results from the switching impulse disruptive discharge test and the calculated values of U_{50} have a deviation that varies between 4.4-9 %, where the deviation increasing with the length of the air gap.

Figure 18 shows the probability for a flashover to occur as a function of the magnitude of the switching impulse for insulator string of 1.96 m, corresponding to 15 insulators.

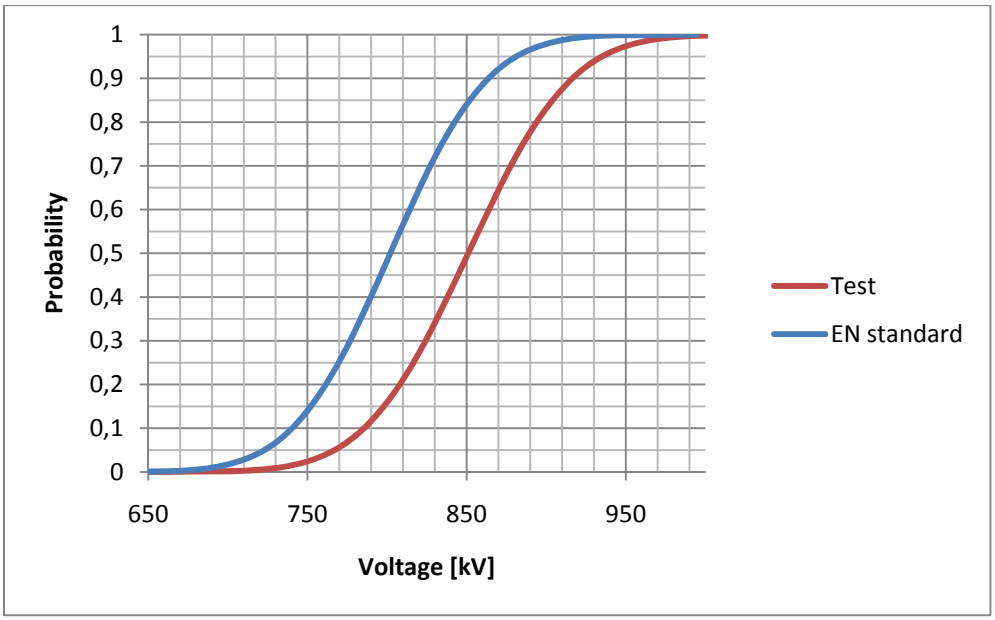

Figure 18 Cumulative normal distribution probability curves for flashover for switching impulse (SI wet) and 15 insulators (1.96 m).

The difference between U_{50} and U_{rw} is 1.3 standard deviations, as for lightning impulses, but for switching impulses, one standard deviation corresponds to 6 % of U_{50}.The difference between the value of U_{50} based on the standard and U_{50} tested is approximately equal to one standard deviation when considering a flash over length of 15 insulators or 1.96 m. If the value of U_{50} given by the blue curve that represent the standard is inserted into the formula for U_{rw}, we obtain the required withstand voltage:

$$U_{rw} = U_{10} = U_{50} - 1.3Z = 802 - 1.3 \cdot 0.06 \cdot 802 = 739kV \tag{9.3}$$

where the standard deviation, Z = 0.06 U_{50}.

U_{10} of 739 kV on the blue curve gives a probability of 10 % for flash over, while it gives a probability of 0.014 for flash over on the red curve that represents the laboratory test result.

Table 7 below shows the results of the U_{10} switching impulse disruptive discharge test on insulator strings of 14 and 15 insulators corresponding to a flash over length of 1.8 and 1.96 m respectively.

Table 7 U_{10}, 10 % flashover probability for switching impulse (SI wet).

Test	No. of insulators	No. of impulses	U10 corrected test	No. of flash over	U10 calculated conductor-window kwet=1.155	Deviation between test and calculation referred to calculated values
SI wet	14	15	732 kV	1	695	5.3 %
SI wet	15	15	804 kV	3	739	8.8 %

Again, when an insulator string of 15 insulators is considered, the test result shows that the value of U_{10} = 804 kV which is 8.8 % higher than U_{10} calculated according to standards.

If the test results of the U_{50} - test are inserted into the formula for U_{rw}, ideally we should end up with a result similar to the U_{10} - test of equally number of insulators. When inserting the test result of U_{50} at 15 insulators obtain:

$$U_{rw} = U_{10} = U_{50} - 1.3Z = 851 - 1.3 \cdot 0.06 \cdot 851 = 785kV \tag{9.4}$$

which is somewhat between the actual test result of 804 kV and the value obtained from the standard of 739 kV. This indicates that there may be safety margins added in both the formula for required withstand voltage, U_{rw} and the value of the statistical withstand voltage U_{50}. This may in sum give an unnecessarily high safety margin.

Conclusion: The U_{rw}-value determined from the standards, which is supposed to have a probability of 10 % for a flash over to occur, has a 1.4 % probability for occurrence according to the switching impulse disruptive discharge test with 15 insulators.

9.2 Researh report 2: EFI

The research work titled “Luftisolasjon. Undersøkelse av elektrisk holdfasthet for linjeisolasjon” [**7**] conducted by former SINTEF, EFI in 1971 discusses dimensioning of insulation in towers and probability for flash over, i.e. probabilistic insulation dimensioning. The test object, an insulator string of 9 to 18 cap- and pin insulators, was exposed to lightning impulses, switching impulses and 50 Hz operating voltage. The research takes aim to establish a relationship between flash over voltage for a rod-plane gap and relevant insulation configurations of equal strike distance i.e. the gap factor, K_g.

Other issues that were investigated were the impacts of the insulator swing angle and rain to the electrical withstand voltage. The report presents the value of U_{50} for the three different types of

electrical stress at five different insulator configurations for mid- and outer phase and at four different swing angles of the insulator string of the outer phase.

The test object used to perform the tests was simulating outer phase and tower window as shown in fig. 19 a), b) and c).

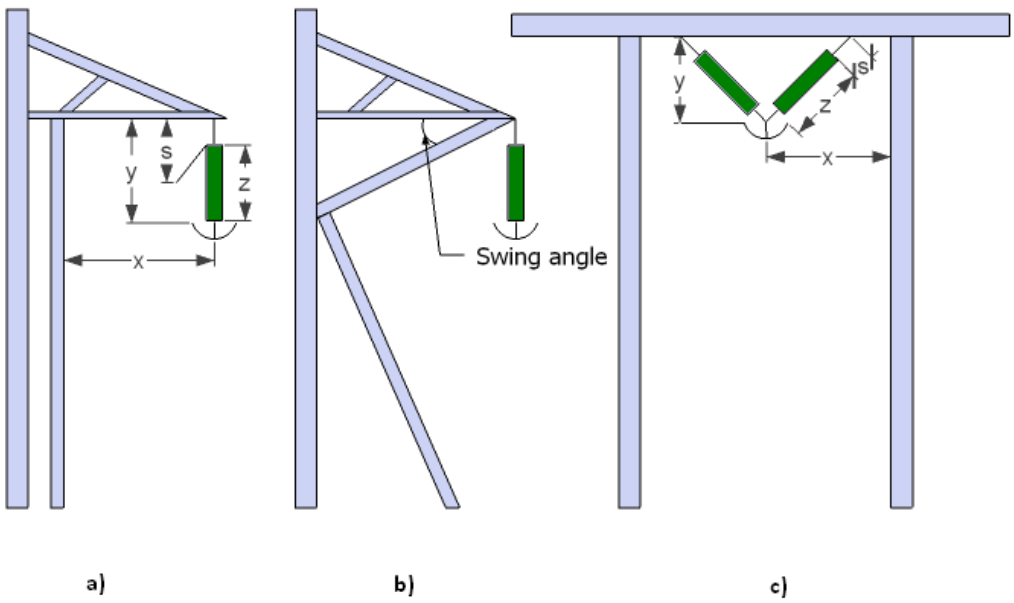

Figure 19 Test object used to simulate the tower arrangement. Figure a) and b) represents the outer phase. Swing angle is simulated according to figure b). Figure c) represents the mid phase [7].

The test object consisted of:

- I-string insulators of 9, 15 and 18 cap- and pin insulators and V-string insulators of 9 and 15 cap- and pin insulators type NTP 33019, 21 ton.
- Tower arrangement according to fig 19.

The test procedure was as follows:

- Tower-cross arm was simulated according to fig 19 a) and b) for I-string insulators and tower window were simulated according to fig 19 c) for both V-string and I-string insulators.
- Insulator swinging was simulated for the outer phase according to fig 19 b) for 10°, 20°and 30°.

- The experiments were performed using different voltage impulse shapes simulating lighting impulses and switching impulses. To simulate lighting strike an impulse shape with time to peak T1 = 1.2 µs and time to half value T2 = 50 µs was used according to fig 20. The 1.2/50 µs impulse is defined as the standard lightning impulse.
- The switching impulse was simulated by applying a voltage shape with time to peak T1 = 200 µs and time to half value T2 = 3000 µs to the test object according to fig 20.

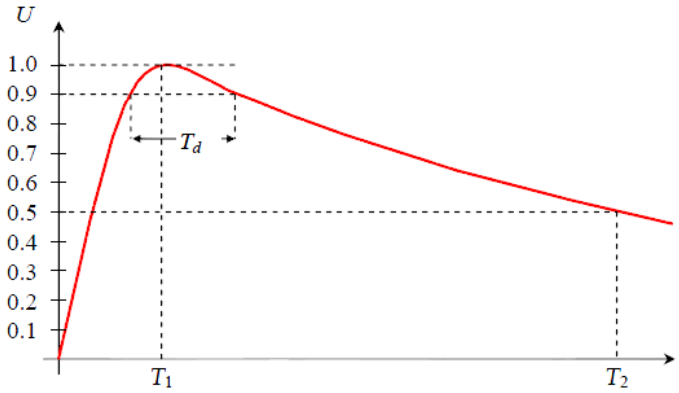

Figure 20 Voltage impulse. X-axis: T1 = time to the peak value of the impulse is obtained, T2 = time to half of the peak value of the impulse remains. Td = time where the impulse has a voltage level between 0.9 and 1.0 PU. Y-axis: Value of the voltage of the impulse in PU.

9.2.1 Gap factors

The research established a relationship between flash over voltage for a rod-plane gap and relevant insulation configurations of equal strike distance according to fig. 19 a), b) and c). The relation between the flash over voltage for a certain insulation configuration and a rod-plane gap is described by the gap factor. Several disruptive discharge tests are performed for several variants of the geometry (s, z, y, and x) for lightning- / switching impulses and 50 Hz power frequency and for wet and dry conditions. The test results are compared to disruptive discharge tests of a rod-plane gap of equal length as a reference gap.

The gap factor is the relation:

$$K_g = \frac{U_{50}\_test\_object}{U_{50}\_rod-plane\_pos.\_pol.} \tag{9.5}$$

The gap factors obtained from the EFI-test are compared to gap factors obtained according to the formulas 3.3, 3.4, 3.5 and 3.6 in chapter 4 “Gap factors”.

Paris and Cortina suggested several gap factors depending on the gap configuration, from 1 for a rod-plane gap to 1.9 for a conductor-rod gap. EN 50341 reproduces typical values for gap factors that are based on typical dimensions for different insulating configurations. These are fixed values given for one specific configuration which dimensions are within an area of application. If a more accurate value of the gap factor is desired, it can be calculated according to the formulas 3.5 and 3.6 from the Cigré 72 technical bulletin [**2**] which describes how to calculate the gap factors for the different geometric configurations. By doing this one obtain a gap factor that should describe the electric properties of the air gap more accurately, since the strike distance is also taken into account.

When putting in different strike distances from 2-10 metres in the formula 3.6 for tower window, and plotting the results, one obtains the following curve with the gap factor as a function of the strike distance-that is, the strike distance in the x-axis and the gap factor in the y-axis.

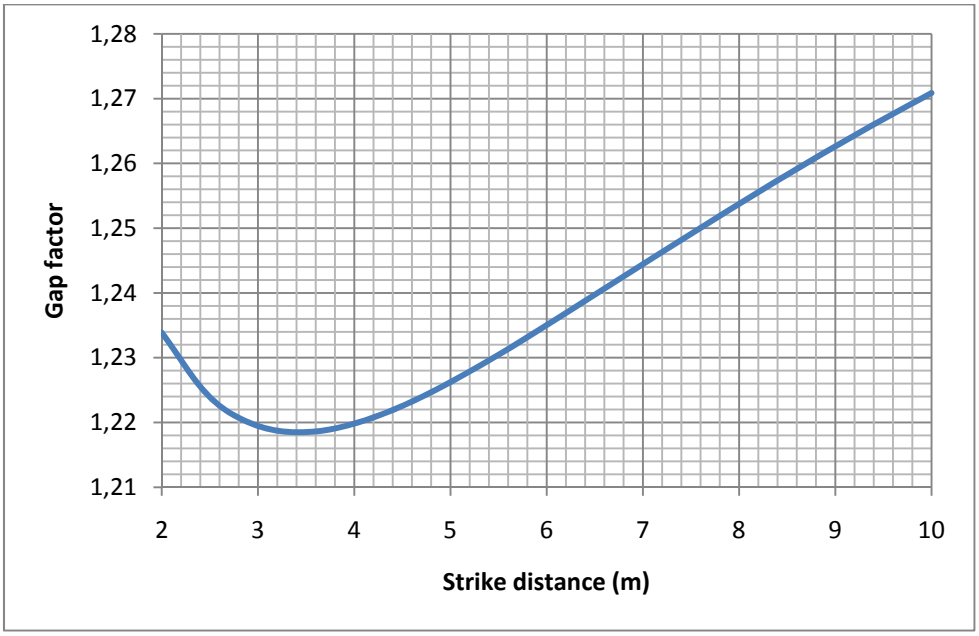

Figure 21 Gap factor for positive polarity switching impulse tower window (mid phase) as a function of the strike distance.

From the curve it is easy to visualize that the influence of the strike distance to the gap factor is small and that the outcome from calculating the gap factor for a specific strike distance does not differ significantly from the fixed values given in the standard, which in this case, the tower window, would be 1.25. This observation supports the statement from the Cigré 72 technical bulletin which state: "Something that should be noticed is that the gap factor is practically unaffected by the length of the air gap [**2**]."

The research work conducted by EFI in 1971 [**7**] concludes that for switching impulse the gap factor is dependent on the strike distance and that the gap factors vary approximately linearly when the strike distance is in the range of 1-3 metres. This conclusion seems reasonable compared to the curve in fig. 21 in the range of 1-3 metres.

However, as fig. 21 shows a decrease of the gap factor between 1-3 metres, the EFI report claims that the gap factor increases with increased strike length in the same area.

The EFI research suggests that for air gaps of 1 m < Z ≤ 3 m ref. fig. 22 b) the gap factor for the mid phase and positive switching impulse can with good approximation be set to:

$$K_{g\_sf} = 1 + 0.067Z \tag{9.6}$$

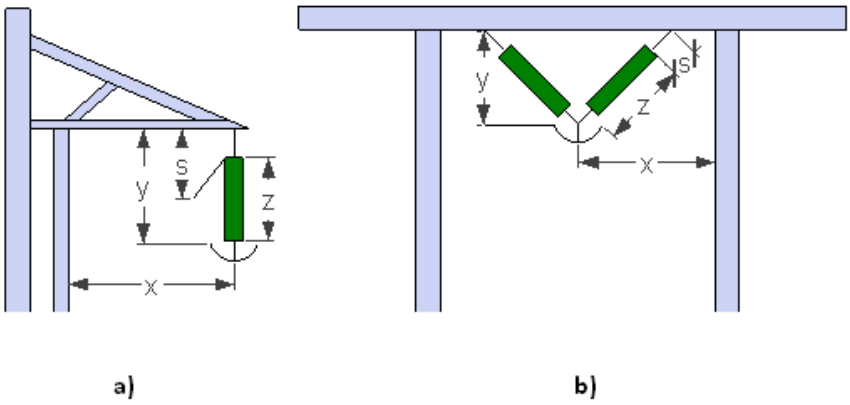

Figure 22 Gap factor for positive polarity switching impulse tower window (mid phase) as a function of the strike distance [7].

The length of the suspension equipment that secures the insulator string to the tower has to some extent an impact on the behaviour of the air gap and hence the gap factor. However, the report concludes that when the length of the suspension equipment is in the range from 180 mm to 1120 mm, the difference with respect to the value of U_{50} is negligible. Thus, according to this conclusion the suspension equipment has a negligible impact to the gap factor for most practical cases.

In the following three chapters the influence of rain to the gap factor and thus the withstand strength of air gaps with insulators examined for lightning impulse, switching impulse and continuous 50 Hz voltage.

9.2.1.1 Lightning impulse

Outer phase

Table 8 Gap factors for outer phase at lightning impulse.

Test object	Dry/ wet	Geometry m				K_g EFI-test	K_g Standard
		s	z	y	x		
I-string insulator 9 segments	Dry	0.18	1.35	1.53	2.40	1.13	1.099
"	"	0.60	1.35	1.95	2.40	1.15	1.041
"	"	0.60	1.35	1.95	3.06	1.16	1.041
"	"	1.12	1.35	2.47	4.00	1.15	1.080
"	Wet	0.18	1.35	1.53	2.40	1.10	1.099
"	"	0.60	1.35	1.95	2.40	1.10	1.041
"	"	0.60	1.35	1.95	3.06	1.13	1.041
"	"	1.12	1.35	2.47	4.00	1.14	1.080
I-string insulator 15 segments	Dry	0.18	2.38	2.56	4.00	1.09	1.079
"	Wet	0.18	2.38	2.56	4.00	1.09	1.079
"	"	0.60	2.38	2.98	4.00	1.12	1.075
I-string insulator 18 segments	Dry	1.20	2.80	4.00	4.50	1.11	1.072

Mid phase

Table 9 Gap factors for mid phase at lightning impulse.

Test object	Dry/ wet	Geometry m				K_g EFI-test	K_g Standard
		s	z	y	x		
V-string insulator 9 segments	Dry	0.18	1.34	1.26	2.40	1.07	1.058
"	"	0.60	1.34	1.54	3.06	1.08	1.054
"	"	1.12	1.34	1.90	4.00	1.13	1.051
"	Wet	0.18	1.34	1.26	2.40	1.08	1.058
"	"	0.60	1.34	1.54	3.06	1.09	1.054
"	"	1.12	1.34	1.90	4.00	1.07	1.051
V-string insulator 15 segments	Dry	0.18	2.37	2.31	4.50	1.07	1.049
"	"	0.60	2.37	2.63	4.50	1.06	1.048
"	Wet	0.18	2.37	2.31	4.50	1.05	1.049
"	"	0.60	2.37	2.63	4.50	1.06	1.048
I-string insulator 9 segments	Dry	0.60	1.35	1.95	3.06	1.12	1.051
"	Wet	0.60	1.35	1.95	3.06	1.11	1.051
I-string insulator 15 segments	Dry	0.18	2.38	2.56	4.50	1.07	1.048
"	Wet	0.18	2.38	2.56	4.50	1.07	1.048

For lightning impulses the gap factors from the EFI-test are very similar to the gap factors obtained from the standard for both dry and wet conditions. Rain seem to have no influence on the withstand strength of I-strings or V-strings exposed to lightning impulses.

9.2.1.2 Switching impulse

Outer phase

Table 10 Gap factors for outer phase at switching impulse.

Test object	Dry/ wet	Geometry m				K_g EFI-test	K_g Standard
		s	z	y	x		
I-string insulator 9 segments	Dry	0.18	1.35	1.53	2.40	1.19	1.374
"	"	0.60	1.35	1.95	3.06	1.22	1.332
"	"	1.12	1.35	2.47	4.00	1.26	1.302
"	Wet	0.18	1.35	1.53	2.40	0.84	1.323
"	"	0.60	1.35	1.95	3.06	0.79	1.297
"	"	1.12	1.35	2.47	4.00	0.78	1.276
I-string insulator 15 segments	Dry	0.18	2.38	2.56	4.00	1.31	1.298
"	Wet	0.18	2.38	2.56	4.00	1.05	1.274

Mid phase

Table 11 Gap factors for mid phase at switching impulse.

Test object	Dry/ wet	Geometry m				K_g EFI-test	K_g Standard
		s	z	y	x		
V-string insulator 9 segments	Dry	0.18	1.34	1.26	2.40	1.04	1.220
"	"	0.60	1.34	1.54	3.06	1.09	1.206
"	"	1.12	1.34	1.90	4.00	1.14	1.194
"	Wet	0.18	1.34	1.26	2.40	1.00	1.213
"	"	0.60	1.34	1.54	3.06	0.98	1.201
"	"	1.12	1.34	1.90	4.00	0.86	1.190
V-string insulator 15 segments	Dry	0.60	2.37	2.63	4.50	1.15	1.182
"	Wet	0.60	2.37	2.63	4.50	1.08	1.179
I-string insulator 9 segments	Dry	0.60	1.34	1.90	3.06	1.20	1.194
"	Wet	0.60	1.34	1.90	3.06	0.94	1.190
I-string insulator 15 segments	Dry	0.18	2.38	2.56	4.50	1.22	1.182
"	Wet	0.18	2.38	2.56	4.50	1.08	1.180

For switching impulses, the EFI-test shows a higher decrease of the gap factor as a consequence of rain than those obtained from the standard. The EFI-test shows a decrease of k_g and thus the withstand strength in the order of 6-13 % for V-string insulators and 20-34 % for I-string insulators. The influence of rain to the gap factor is decreasing with increased insulator length. The gap factors obtained from the standard show a decrease of k_g in the range of 0-4 %. However, the EFI test results

and the EN standard seem to follow each other relatively in dry conditions. The gap factors of the EN standard are somewhat higher than the EFI test results.

9.2.1.3 50 Hz power frequency

Outer phase

Table 12 Gap factors for outer phase at power frequency voltage.

Test object	Dry/ wet	Geometry m				K_g EFI-test	K_g Standard
		s	z	y	x		
I-string insulator 9 segments	Dry	0.18	1.35	1.53	2.40	1.15	1.061
"	"	0.60	1.35	1.95	2.40	1.17	1.054
"	"	0.60	1.35	1.95	3.06	1.17	1.026
"	"	1.12	1.35	2.47	4.00	1.20	1.050
"	Wet	0.18	1.35	1.53	2.40	0.75	1.061
"	"	0.60	1.35	1.95	2.40	0.69	1.054
"	"	0.60	1.35	1.95	3.06	0.69	1.026
"	"	1.12	1.35	2.47	4.00	0.69	1.050
Rod-plane	Dry		1.35			1.03	

Mid phase

Table 13 Gap factors for mid phase at power frequency voltage.

Test object	Dry/ wet	Geometry m				K_g EFI-test	K_g Standard
		s	z	y	x		
V-string insulator 9 segments	Dry	0.18	1.34	1.26	2.40	0.98	1.037
"	"	0.60	1.34	1.54	3.06	1.00	1.034
"	"	1.12	1.34	1.90	4.00	1.00	1.032
"	Wet	0.18	1.34	1.26	2.40	0.71	1.037
"	"	0.60	1.34	1.54	3.06	0.79	1.034
"	"	1.12	1.34	1.90	4.00	0.74	1.032
I-string insulator 9 segments	Dry	0.60	1.35	1.95	3.06	1.19	1.032
"	Wet	0.60	1.35	1.95	3.06	0.80	1.032

As for the switching impulses, the 50 Hz power frequency test shows that the difference in kg in dry and wet conditions seems to be larger for the EFI-test than proposed by the standard. The EFI-test shows a decrease of the gap factor as a consequence of rain in the order of 25 % for V-string insulators and 33-40 % for I-string insulators. There is no difference for dry and wet conditions for the gap factors obtained from the standard. However, the test results and the calculations seem to

follow each other relatively in dry conditions. Opposite to switching impulses, the gap factors obtained by the EN standard are somewhat lower than those from the EFI test results.

The tests performed with switching impulse and power frequency voltage show that the I-string suffers a greater loss of electric withstand strength than the V-string as a consequence of rain. This can be explained by the naturally drain effect caused by the 45° angle of the V-string insulators. These findings are consistent with what was found in Cigré report 72 [**2**] (see chapter 4.4). As for lightning impulses it did not seem to be any differences on dry and wet conditions. This may indicate that rain has a lesser impact on short duration impulse waves.

9.2.2 U_{50} disruptive discharge test

9.2.2.1 Electrical stress from Lightning

Outer phase EFI-test:

Table 14 Conductor – cross arm exposed to a 1.2/50µs positive lightning impulse, (LI) under dry conditions.

Test object	Geometry D1/dx O.P ref. fig. 7	Swing angle	U_{50} EFI Kg = 1.31 at 0°	% reduction at swing angle
I-string insulator	2.56/4 m	0°	1380	0
"	"	10°	1354	1.9
"	"	20°	1289	6.6
"	"	30°	1204	12.8

Mid phase calculated:

Table 15 Conductor – cross arm calculated for a 1.2/50µs positive lightning impulse, (LI) under dry conditions. Same geometry as above.

Swing angle	U_{50} calculated Air gap	Gap factor Kg	% reduction at swing angle	U_{50} calculated Over insulator
0°	1484	1.094	0	1464 (1.079)
10°	1461	1.093	1.5	"
20°	1392	1.091	6.2	"
30°	1279	1.089	13.8	"

When comparing table 14 and 15 the following is observed:

- The relative reduction of U_{50} due to insulator swinging is practically the same for the EFI-test and the calculations.
- The calculated values of U_{50} are around 100 kV higher than in the test, opposite to the results of the STRI-test where the calculated values are about 130 kV lower than the test results.

- In the EFI-test the flash over tends to go to along the insulator string for 10° swing angle, at 20° swing angle most flash over goes directly to the traverse and at 30° swing angle some flash over also goes to the vertical tower pole.
- From the results in the table for calculated values it can be seen that U_{50} in the air gap becomes smaller than U_{50} over the insulator, i.e. the flash over goes directly to the traverse already at 10°swing angle.

Mid phase EFI-test:

Table 16 Tower window exposed to a 1.2/50µs positive lightning impulse, (LI) under dry and wet conditions.

Test object	Geometry D1/dx O.P ref. fig. 7	Dry/wet	U_{50} EFI	Gap factor Kg
I-string insulator	2.56/4.5 m	Dry	1350	1.07
"	"	Wet	1352	1.07

Mid phase calculated:

Table 17 Tower window calculated for a 1.2/50µs positive lightning impulse, (LI) under dry and wet conditions.

Test object	Geometry D1/dx O.P ref. fig. 7	Dry/wet	U_{50} calculated	Gap factor Kg
I-string insulator	2.56/4.5 m	Dry	1422	1.048
"	"	Wet	1422	1.048

When comparing table 16 and 17 the following is observed:

- Both the test results and the calculations show no difference in the gap factor and hence the withstand strength of the air gap in wet and dry conditions, which is to be expected according to the results seen in table 13.

9.2.2.2 Electrical stress from line switching

The test results from the EFI-work are compared with calculations. The calculations are done on the basis of the EN-standards [**5**] which have standardized the switching impulse as a 250/2500 impulse. These results have been compared with calculations and the comparison is shown in the table below.

Outer phase EFI-test:

Table 18 Conductor – cross arm exposed to a 200/3000µs positive switching impulse, (SI) under dry conditions.

Test object	Geometry D1/dx O.P ref. fig. 7	Swing angle	U_{50} EFI Kg = 1.31 at 0°	% reduction at swing angle
I-string insulator	2.56/4 m	0°	1219	0
"	"	10°	1172	3.9
"	"	20°	1110	8.9
"	"	30°	1010	17.1

Mid phase calculated:

Table 19 Conductor – cross arm calculated for a 250/2500µs positive switching impulse, (SI) under dry conditions. Same geometry as above.

Swing angle	U_{50} calculated Air gap	Gap factor Kg	% reduction at swing angle	U_{50} calculated Over insulator
0°	1143	1.360	0	1091 (1.298)
10°	1129	1.358	1.2	"
20°	1088	1.352	4.8	"
30°	1019	1.342	10.8	"

Mid phase EFI-test:

Table 20 Tower window exposed to a 200/3000µs positive switching impulse, (SI) under dry and wet conditions.

Test object	Geometry D1/dx O.P ref. fig. 7	Dry/wet	U_{50} EFI	Gap factor Kg
I-string insulator	2.56/4.5 m	Dry	1124	1.22
"	"	Wet	1000	1.08

Mid phase calculated:

Table 21 Tower window calculated for a 250/2500µs positive switching impulse, (SI) under dry and wet conditions.

Test object	Geometry D1/dx O.P ref. fig. 7	Dry/wet	U_{50} calculated	Gap factor Kg
I-string insulator	2.56/4.5 m	Dry	994	1.182
"	"	Wet	991	1.180

It is worth notifying that the shape of the voltage shape might influence the result significantly. Both test results and calculations indicate significant loss in insulation level when the insulators have a certain angle. This is as expected as the minimum air clearance is reduced with increased swing angle. The EFI-test shows a lot higher decrease of U_{50} than the calculations. However, the trend is that U_{50} decreases relatively at the same ratio in both cases. The part of the EFI-test that concerns testing of electrical withstand voltage as a function of the swing angle of the insulator strings is only done for the outer phase. As the most critical minimum air clearance is located at the middle phase, it would be more interesting to know the withstand strength here. Therefore calculations of U_{50} and gap factors are performed for the same swing angles as for the outer phase although they are not compared to any real test. They might however indicate what could be expected in real life.

The result is shown in table below.

Table 22 Tower window calculated for a 250/2500µs positive switching impulse, (SI) under dry and wet conditions and for different swing angles. The air gap between phase and guy wire and the length of the insulator string is both 2.56 m.

Swing angle	U_{50} Phase- guy wire	U_{50} Phase-traverse	U_{50} Dry insulator	U_{50} Wet insulator
0°	1024 (1.218)	1024 (1.218)	994 (1.182)	991 (1.180)
10°	936 (1.222)	1013 (1.219)	994 (1.182)	991 (1.180)
20°	861 (1.228)	982 (1.220)	994 (1.182)	991 (1.180)
30°	803 (1.233)	928 (1.223)	994 (1.182)	991 (1.180)

Swinging of insulators will cause a change of the geometric properties of the air gap in a tower. Thus, the gap factors will also change with the insulator swing angle. However, the change of the size of the air gap due to swinging is the main reason for reduction of the value of U_{50} rather than the change of the gap factor. The gap factor given in parentheses for each value of U_{50} does not appear to change significantly with the swing angle of the insulator string. This agrees with the results obtained in table 4 in chapter 8.

Table 22 indicates that the electric withstand strength is about 3 % less over a dry or wet insulator as for the rest of the air gap. At 10° swing angle the phase-guy wire air gap has lost 9 % of the electrical withstand strength. At 20° swing angle the phase-guy wire air gap has lost 16 % of the electrical withstand, while the phase-traverse air gap has lost about 4 % of the electrical withstand strength.

On the basis of the calculations, one can assume that

- At swing angles not exceeding 10° most flash over will occur along the insulator string.
- At swing angles exceeding 10° most flash over will occur in the air gap, mainly to the guy wire.
- These results differ some from the EFI test which concludes that a flashover will occur along the insulator at a swing angle of 10°, and to the traverse at a swing angle of 20°.

The table indicates that the statistical withstand voltage, U_{50} decreases with increased swing angle as expected. At a certain swing angle the strike might eventually find its way to the guy-wire. As previous discussed, it is desirable that a flash over finds its way to the traverse rather than to the guy-wires. This has to be taken into account when choosing insulator configuration. Each tower has a specific maximum swing angle at a defined wind speed.

9.3 Conclusion of the chapter

Gap factors and the statistical withstand voltage U_{50} are investigated by comparing results from two previous research with calculations based on the EN standard.

The EN standard turns out to give lower U_{50} for both switching- and lightning impulses than the test results from STRI. The difference is in order of 5–9 % for switching impulses and 12 % for lightning impulse.

For switching impulses applies that the EN standard provides a greater gap factor than the test results from EFI. The difference between EN standard and EFI results is in order of 0–20 % depending on insulator configuration and dry or wet condition. The biggest difference is found for I-string insulators in wet condition. For lightning impulses applies the opposite, but there is only a slight difference between EN standard and test results.

Rain has no influence on the withstand strength of I-strings or V-strings exposed to lightning impulses (see part 9.2.1.1).

For switching impulses rain seem to reduce the withstand strength in the order of 6-13 % for V-string insulators and 20-34 % for I-string insulators (see part 9.2.1.2).

For continuous power frequency voltage rain seem to reduce the withstand strength in the order of 25 % for V-string insulators and 33-40 % for I-string insulators (see part 9.2.1.3).

10 A case study

10.1 Kristiansand-Arendal

One of the power lines that is voltage upgraded these days is 300 kV line Kristiansand – Arendal. Kristiansand – Arendal is a 62750 m long power line consisting of 203 towers. 52 of the 203 towers have a minimum air clearance less than 2.72 m which corresponds to 17 insulators. Seven of the 203 towers are considered as critical with respect to their small dimension and these towers have to be further investigated in order to determine whether they are suitable for voltage upgrading or not.

The purpose of the case study is to get an idea of the discrepancy to be expected between the requirements to air clearances set by the standard and the actual air clearances available in 300 kV towers. It is also of great interest to clarify which of the three operation conditions power frequency, switching and lightning that is most critical when considering voltage upgrading.

The formulas for calculating minimum required air clearances according to the EN-standards are given by:

Minimum air clearance phase to earth for power frequency voltage:

$$D_{50Hz\_p-e} = \left[\frac{e^{\frac{Us}{750\sqrt{3}\cdot K_a \cdot K_{z\_pf} \cdot K_{g\_pf}}} - 1}{0,55} \right]^{0,83} [m] \tag{10.1}$$

where

Us is the system voltage

K_{g_pf} is the power frequency gap factor, expressed in terms of switching impulse gap factor K_g, $K_{g\_pf} = 1.35K_g - 0.35K_g^2$

K_a is the altitude factor

K_z is the deviation factor of the air gap withstand voltage distribution

Minimum air clearance phase to earth for switching impulse:

$$D_{el} = \frac{1}{0,46}\left[e^{\frac{K_{cs} \cdot U_{e2\%\_sf}}{1080 K_a \cdot K_{z\_sf} K_{g\_sf}}} - 1 \right] [m] \tag{10.2}$$

where

K_{g_sf} is the switching impulse gap factor. K_{g_sf} = K_g, according to the formula for gap factors.

K_a is the altitude factor

K_z is the deviation factor of the air gap withstand voltage distribution

K_{cs} is the statistical coordination factor

$U_{e2\%\_sf}$ is the 2 % slow front overvoltage stressing the air gap (slow front overvoltage having a 2 % probability of being exceeded)

Minimum air clearance phase to earth for lightning impulse:

$$D_{el} = \frac{U_{90\%\_ff\_is}}{530 \cdot K_a \cdot K_{z\_ff} \cdot K_{g\_ff}} = \frac{K_{g\_ff\_is}}{K_a \cdot K_{g\_ff}} d_{is} [m] \tag{10.3}$$

where

K_{g_ff} is the lightning impulse gap factor, expressed in terms of switching impulse gap factor K_g, K_{g_ff} = 0.74 K_{g_ff} + 0.26 K_g

K_a is the altitude factor

K_z is the deviation factor of the air gap withstand voltage distribution

$U_{90\%\_ff\_is}$ is the 90 % lightning withstand voltage of the insulator strings installed on a line

d_{is} is the clearance between the extremities of the insulator string

The table below shows the swing angle of the insulators on tower 7, 11, 27, 100, 129, 180 at 3 year wind and at 50 year wind on the transmission line Kristiansand-Arendal.

Table 23 Swing angles for a selection of tower of the transmission line Kristiansand-Arendal.

Tower No.	Tower height	No. of insulators	Swing angle ± deg			
			3 year wind		50 year wind	
			From right	From left	From right	From left
7	21 m	16	-16,4°	16,4°	-26,4°	26,4°
11	22 m	17	-19,4°	16,2°	-29,8°	26,7°
27	23 m	16	-3,2°	23,8°	-12,3°	31,9°
100	24 m	16	0,3°	19,6°	-5,6°	25,5°
129	22 m	17	-19,4°	16,2°	-29,8°	26,7°
180	25 m	17	-17,5°	22,6°	-30°	34,6°

Tower No. 7, 27 and 100 have insulator strings consisting of 16 insulators, which correspond to a length of 2.55 meters. Here the alternative air gaps between phase and guy-wire are 2.55 or 2.7 meters.

Tower No. 11, 29 and 180 have insulator strings consisting of 17 insulators, which correspond to a length of 2.72 meters. The distance from phase to guy-wire might be 2.72 or 2.9 meters.

The minimum distances for seven critical towers of the Kristiansand-Arendal power line are listed in the table below. The numbers given in parenthesis are the maximum swing angle of the insulators at respective operation conditions. Only the mid-phases are taken into account, since the critical minimum distances are to be found here.

Table 24 Measured minimum distances for tower mid-phase conducted by Statnett. The corresponding swing angles are given in parenthesis.

Tower No.	Min distance [m] No wind	Min. distance [m] 3 year wind	Min. distance [m] 50 year wind	Insulators used
7	2.699	2.044 (16.4°)	1.762 (26.4°)	16
11	2.710	2.014 (19.4°)	1.733 (29.8°)	17
27	2.568	2.028 (23.8°)	1.807 (31.9°)	16
100	2.588	2.230 (19.6°)	2.063 (25.5°)	16
110	2.281	1.712 (37°)	1.588 (46.5°)	16
129	2.730	2.206 (19.4°)	1.956 (29.8°)	17
180	2.797	2.032 (22.6°)	1.737 (34.6°)	17

The table below shows the minimum required air clearances for the same seven towers if calculated according to EN 50341.

Table 25 Minimum required distances for tower mid-phase calculated according to EN 50341.

Tower No.	Min distance [m]. No wind	Min. distance [m]. 3 year wind	Min. distance [m]. 50 year wind
7	2.709	1.936	0.841
11	2.890	1.929	0.840
27	2.709	1.914	0,837
100	2.709	1.914	0,837
110	2.709	1.848	0.826
129	2.890	1.930	0.840
180	2.890	1.914	0,837

The table below shows the difference between the measured minimum air clearances of table 24 and the minimum required air clearances according to EN 50341. The values given in percent are for lightning impulses which turned to be the worst case with respect to minimum clearances.

Table 26 Comparison of table 24 (measured minimum clearances) and table 25 (required minimum clearances according to EN 50341).

Tower No.	Real min. dist. – standard min. dist. [m]. No wind	Real min. dist. – standard min. dist. [m]. 3 year wind	Real min. dist. – standard min. dist. [m]. 50 year wind	Percentage difference No wind
7	-0.01	0.108	0.921	-0.37 %
11	-0,18	0.085	0.893	-0.35 %
27	-0.141	0.144	0,970	-5.20 %
100	-0.121	0.316	1.226	-4.47 %
110	**-0.428**	**-0.136**	**0.762**	**-15.80 %**
129	0.021	0.276	1.116	0.73 %
180	0.088	0.118	0,900	3.04 %

10.2 Findings of the case study

Table 24 shows the actual minimum air clearances of the mid-phase of the seven towers in Kristiansand – Arendal. Table 25 shows the calculated required minimum distances of the same towers. The calculations are done on the basis of the formulas given in the standard EN 50341, equation 10.1, 10.2 and 10.3. The real distances are compared with the calculation, and the results are reproduced in table 26.

Comparisons between the data given and calculations done for the seven towers show that the tightest clearances are located at no-wind conditions where lightning impulses is the dimensioning voltage. For this operation condition only two of the seven towers seem to have sufficient air clearance. It appears that the most critical tower, No. 110, has a minimum clearance of 2.281 m which is 0.428 m or 15.8 % shorter than the minimum clearance that the standard recommends, which is 2.709 m for this specific case.

In the case of the three year wind conditions where switching impulses is the dimensioning voltage, only tower No. 110 seems to not have sufficient air clearance. For this tower the measure air clearance is 7.4 % less than the minimum air clearance required by the EN standard.

In the case of the fifty year wind conditions where power frequency voltage is the determinant voltage for the minimum air clearances, every one of the seven towers are within the requirement for minimum distances by a wide margin.

10.3 Saving potential

The excessive cost for replacing an I-string insulator with a V-string insulator is 150 000 NOK/tower. For the voltage upgrading project Kristiansand – Arendal it was found that sufficient withstand strength was still maintained at minimum air clearances of 10 cm shorter than recommended by the EN standard. By reducing the minimum air clearances by 10 cm, 6.5 mill. NOK were spared.

10.4 Conclusion of the chapter

From the results seen in table 26 it can be concluded that according to the EN-standards it will be most difficult to fulfill the required minimum air clearance for lightning impulses. However, the test results from STRI in chapter 9.1.1 indicate that the tested flash over voltage U_{50_LI} is 12 % higher than U_{50_LI} obtained from the EN standard.

The same applies for switching impulses; tower No. 110 has a minimum clearance which is 7.4 % less than required by the EN standard. Test results from STRI in chapter 9.1.2 indicate that the tested flash over voltage U_{50_SI} is in the area of 4.4-6 % higher than U_{50_SI} obtained from the EN standard.

This gives reason to assume that the standard suggest a U_{50} that is lower than the actual voltage level needed to give a 50 % probability for flash over.

11 New laboratory test

A master thesis performed by Michael Hinteregger at the Graz University of Technology in Austria is a collaboration project to this master thesis is. In that thesis a laboratory test will take place.

11.1 Test proposal

The two laboratory tests presented in chapter 9 are performed on a test object simulating a transmission tower. Common feature for these tests is that the test object lacks the guy wires, which is found not to have the same electric properties as the rest of the air gap. A new test should be performed on a test object with guy wires as shown in fig. 23 below, to verify the findings in this report. The test object is proposed by Michael Hinteregger.

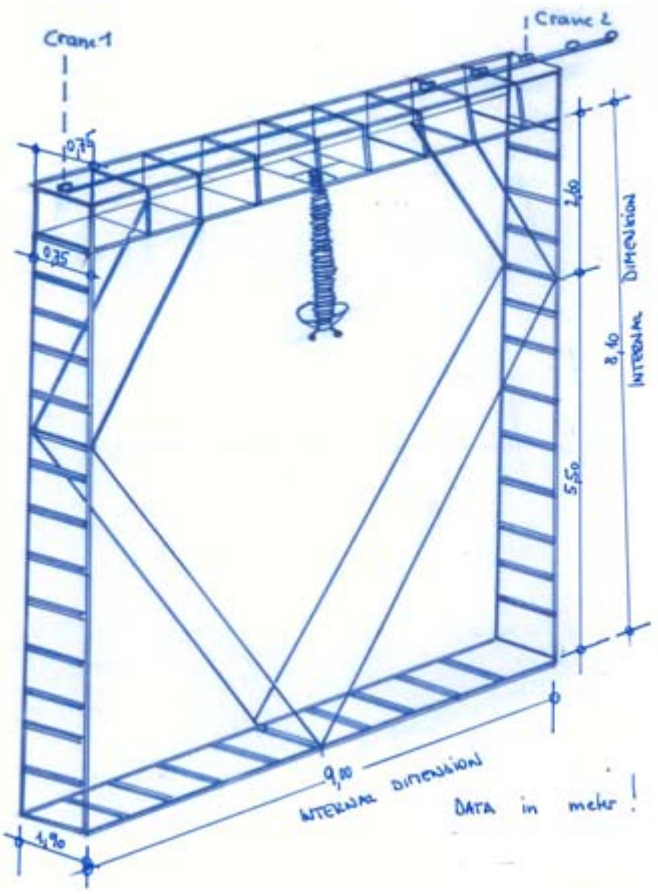

Figure 23 Test object proposed by Michael Hinteregger at the Graz University of Technology.

12 Discussion

In the EN standards each gap configuration is dedicated to a single gap factor. An air gap in a transmission tower should not necessarily be considered as a single air gap between two electrodes, but rather as a complex air gap represented by multiple electrodes. Hence, the withstand strength between phase and the different earthed construction parts which represent the tower window will vary. It is found that the air gap between phase and guy wire may have about 7 % higher withstand strength than over the insulator string. This would be interesting to verify with laboratory tests, as this would mean an additional security margin towards the guy wires. In case of a flash over, it is desirable that it goes over the insulator to the traverse.

An air gap in a transmission tower can be seen as a complex air gap with multiple electrodes. This applies especially for the tower window (see part 4.2.2 fig. 4). Hence, the tower window might be described more accurately by the three gap factors k_g = 1.3, 1.35 and 1.4 found in table 1.

There is great uncertainty about the behaviour of a flash over in air gaps with insulators exposed to lightning impulses. Thus, the relationship between electrode shapes and gap factors is hard to define for this wave shape (see part 4.2.1).

Four suggested insulator/air gap configurations have been investigated. The minimum required air clearances, U_{50} and gap factors are investigated for different type of electrical stress and swing angles.

Table 3 shows that minimum required air clearance according to EN standard for all of the three impulse types, LI, SI and PF, is achieved with configuration 2 and 4 where the air gap between phase and guy wire is greater than the length of the insulator string. Configuration 1 and 3 does not fulfill EN standard requirement for minimum air clearance when exposed to lightning impulses (LI).

Table 4 shows that for all of the four insulators- /air gap configurations U_{50} is decreasing with increasing swing angle while the gap factor is increasing with increasing swing angle. The variations of the value of the gap factors are insignificant compare to the variations of U_{50}. This indicates that a change in the geometry of the tower as a result of insulator swinging has negligible impact to the gap factor.

Reduction of U_{50} is rather due to reduced clearance caused by increasing insulator swing angle. The air gap between phase and guy wire has the greatest loss of electrical withstand strength since this is the air gap that reduced the most as a function of increased swing angle.

A variety of different methods to make voltage upgrading possible, also in narrow towers are presented. The insulator strings have always to be extended by two to four insulators.

In cases where wind causes the phases to move to close to the tower construction, the I-string insulators can be supported by composite supporting insulators (fig. 14) or replaced by V-string insulators.

Replacing existing fitting equipment located between phase and insulator with more compact equipment, as illustrated in fig. 12 will gain a limited distance in the air gap. Armour rods (fig. 15) are used when there is an uncertainty on where in the tower window a flash over will take place. This solution is used in towers where the air clearance between phase and traverse is equal to the air clearance between phase and guy wire in the tower window

From the results seen in table 26 it can be seen that according to the EN-standards it will be most difficult to fulfill the required minimum air clearance for lightning impulses. However, the test results from STRI in chapter 9.1.1 indicate that the tested flash over voltage U_{50_FF} is 12 % higher than U_{50_FF} obtained from the EN standard.

The same applies for switching impulses; tower No. 110 has a minimum clearance which is 7.4 % less than required by the EN standard. Test results from STRI in chapter 9.1.2 indicate that the tested flash over voltage U_{50_SF} is in the area of 4.4-6 % higher than U_{50_SF} obtained from the EN standard.

This gives reason to assume that the standard suggest a U_{50} that is lower than the actual voltage level needed to give a 50 % probability for flash over. However, as mentioned earlier in this discussion; it should be noted there is great uncertainty about the behaviour of a flash over in air gaps with insulators exposed to lightning impulses.

For the voltage upgrading project Kristiansand – Arendal it was found that sufficient withstand strength was still maintained at minimum air clearances of 10 cm shorter than recommended by the EN standard. Reducing the minimum air clearances by 10 cm resulted in a saving of 6.5 mill. NOK.

13 Conclusion

It is found that the air gap between phase and guy wire may have about 7 % higher withstand strength than over the insulator string. Using the method for determine required withstand strength of a tower window, $U_{rw} = U_{10}$ will result in; 10 % probability for the flash over to occur over the insulator string to traverse, 2.5 % probability for the flash over to occur towards the tower pole and 0.5 % probability for the flash over to occur towards the guy wire.

The EN standard turns out to give lower U_{50} for both switching- and lightning impulses than the test results from STRI. The difference is in order of 5–9 % for switching impulses and 12 % for lightning impulse.

For switching impulses applies that the EN standard provides a greater gap factor than the test results from EFI. The difference between EN standard and EFI results is in order of 0–20 % depending on insulator configuration and dry or wet condition. The biggest difference is found for I-string insulators in wet condition. For lightning impulses applies the opposite, but there is only a slight difference between EN standard and test results.

Rain has no influence on the withstand strength of I-strings or V-strings exposed to lightning impulses (see part 9.2.1.1).

For switching impulses rain seem to reduce the withstand strength in the order of 6-13 % for V-string insulators and 20-34 % for I-string insulators (see part 9.2.1.2).

For continuous power frequency voltage rain seem to reduce the withstand strength in the order of 25 % for V-string insulators and 33-40 % for I-string insulators (see part 9.2.1.3).

It turns out that lightning impulse/no wind is the operation condition where it is most difficult to fulfill the minimum air clearance required by the EN-standards. It also turns out that U_{50} for lightning impulse is more conservative than U_{50} for switching impulse and power frequency voltage.

14 Bibliography

[1] Rosario Cortina Luigi Paris, "Switching and Lightning Impulse Discharge Characteristics of Large Air Gaps and Long Insulator Strings," 1968.

[2] 33.07 Working Group, "Report 72, Guidelines for the evaluation of the dielectric strength of external insulation," Cigré, 1992.

[3] Luigi Paris, "Influence of Air Gap Characteristics on Line- to Ground Switching Surge Strenght," IEEE, 1967.

[4] EN-standard 50341, "Overhead electrical lines exceeding AC 45 kV," 2008.

[5] EN-standard 60071-2, "Insulation co-ordination," 1996.

[6] Erling Ilstad, *High Voltage Insulating Materials*.: NTNU, 2008.

[7] EFI research report, "Undersøkelse av elektrisk holdfasthet for linjeisolasjon, del 1," 1971.

[8] STRI research report, "Experimental dielectric tests on a porcelain insulator string with cap-and pin insulators type NGK CA500," 2009.