NTNU

Norwegian University of
Science and Technology

A Comparison of Theoretical and Measured Pressure Losses Within a Drinking Water Treatment Plant

Jesse Stephen Smith

Civil and Environmental Engineering
Submission date: August 2016
Supervisor: Cynthia Halle, IVM
Co-supervisor: Sveinung Sægrov, Asplan Viak
Martin Meltzer, Asplan Viak

Norwegian University of Science and Technology
Department of Hydraulic and Environmental Engineering

PREFACE

This Master's thesis has been written as the culmination of the Civil and Environmental Engineering program at the Norwegian University for Science and Technology (NTNU). It was carried out over the course of the 2016 spring semester. The field work was completed at the Treungen Drinking Water Treatment Plant located at Treungen, in the municipality of Nissedal. This thesis was made possible through the cooperation of NTNU, Asplan Viak and Nissedal Municipality.

I was drawn to this project as I have always harbored an interest in the process of producing clean drinking water, and understanding the hydraulics of a drinking water treatment plant is the first step. The initial goal of this project was to evaluate pressure loss through the use of 3D modeling software capable of computational fluid dynamics (CFD). This however was altered over the course of the semester as licensing issues prevented the software in focus from being obtainable. This led to the scope of the project shifting from using CFD software to evaluate pressure loss, to evaluating the theoretical and actual pressure losses through the use of Microsoft Excel. This change proved to be challenging, as it came late in the semester. Fortunately, I had access to a support network that helped me adjust to the new direction and make this alteration a manageable task. I have walked away from this project with a new found appreciation for designing a treatment plant, and I am excited to employ this knowledge for future tasks.

The contents of this thesis are orientated to those interested in the hydraulics of compressible flow. Through this thesis, I have attempted to explain and observe the differences of theoretical pressure loss and that physically measured within a given treatment plant. I hope that by providing theoretical information before presenting the methods and results, one does not require in depth knowledge within the field to comprehend my work.

Trondheim, 01.08.2016

Jesse Stephen Smith

ACKNOWLEDGMENT

First and foremost, I would like to express my thankfulness to everyone who has helped me to reach this point throughout my years of studies, both in the United States, and in Norway.

I would like to give a special thanks to the individuals at NTNU, Asplan Viak and Nissedal Municipality who have helped make this thesis possible. Asplan Viak, have shown me a great deal of support in not only providing necessary documents, but also providing me with academic support. I would particularly like to thank Roger Blekkan, who orchestrate this project, and Martin Meltzer. Martin provided me constant support throughout the semester, and took the time to travel with me to the Treungen treatment plant for collecting data.

I would like to acknowledge Nissedal municipality, particularly Ole Bjørn Lauvdal, who gave us access to the Treungen drinking water treatment plant. Allowing Martin and myself full reign of the plant and giving me the ability to obtain physical pressure measurement.

I would also like to acknowledge my supervisors at NTNU, Associate Professor Cynthia Halle and Professor Sveinung Sægrov. They worked hard to make this project a reality, and provided valuable advice and input through its duration.

I would like to thank and express my gratefulness to my parents who have provided me with continuous support throughout my entire education. Without their support, it would not have been possible to study in Norway.

Finally I would like to express my profound gratitude to my wife, Kjersti Bø, and our daughter, Mali Bø Smith. They have helped me through the entirety of my education with unfailing support. Thank you.

Jesse Smith

ABSTRACT

Pressure loss and its effects on the resulting hydraulics within a drinking water treatment plant are extremely important aspects of design and operation. Pressure losses are important to monitor as they are the driving force within the system. If too much pressure is lost, a treatment plant may by unable to fulfill the networks water demand. In addition, the plants ability to effectively clean water may be compromised. Calculating the theoretical pressure loss is the key to designing a new treatment plant, however, the values calculated and those observed once set in operation, do not always compliment each other. Theoretical losses can be used to properly design a treatment plant, but the actual losses may vary, as some components may not function as desired.

In this project, a reusable Microsoft Excel spreadsheet was developed for calculating the pressure loss within a coagulation/filtration drinking water treatment plant located in Treungen. The calculated results were compared with those observed at the treatment plant through the help of a digital manometer.

The Microsoft Excel spreadsheet was capable of producing adequate pressure loss predictions for the entirety of the plant. For the raw water entering the plant and traveling to the filter, Excel produced results with an error of only 3.4%, while the clean water exiting the filter and entering the network produced a factor of error of approximately 16%. Major considerations to why the percent error for water within the clean water section was so much higher, is likely due to the multiple check valves following the four parallel filters. These check valves are used to ensure one directional flow within the treatment plant. The minor loss coefficient was determined to fluctuate over a wide range for the tested flow rates. The coefficient was calculated to be as low as 5.12 per valve, and as high as 19.9 per valve.

The percent error within the calculated theoretical results may be diminished through the use of further validation of the Excel spreadsheet. This can be done through use of the spreadsheet to compare the produced theoretical results, with those observed within other drinking water treatment plants. It could also be used for further evaluation of the Treungen treatment plant, in an attempt to minimize the percent error. By increasing the number of treatment plants where observed results can be compared to those produced by this spreadsheet, a final improved version could be produced, capable of reducing the workload of designing a new drinking water treatment plant.

Sammendrag

Trykktap og trykktapets virkning på den resulterende hydraulikken innenfor et drikkevannsanlegg er svært viktige aspekter ved drift og design. Det er viktig å følge med på trykktapet i anlegget da de blir drivkraften i systemet. Dersom trykktapet blir for stort, kan renseanlegget få problemer med å oppfylle nettverk vannbehov . I tillegg kan anleggets evne til å effektivt rense vannet bli begrenset. Beregning av teoretisk trykktap er et viktig steg i planleggingen av et nytt renseanlegg, men det er ikke alltid samsvar mellom de beregnede verdiene og de observerte verdiene etter anlegget er satt i drift. Teoretiske tap kan brukes til å utforme et nytt renseanlegg, men de faktiske tapene kan variere, da noen komponenter ikke nødvendigvis fungerer som ønsket.

I dette prosjektet ble et gjenbrukbart Microsoft Excel-regneark utviklet for å beregne trykktapet i et koagulerende/filtrerende drikkevannsanlegg som ligger i Treungen. De beregnede resultatene ble sammenlignet med de som ble observert ved renseanlegget ved hjelp av et digitalt manometer.

Microsoft Excel-regnearket var i stand til å produsere tilstrekkelige trykktapprediksjoner for hele anlegget. For råvannet som kom inn i anlegget og det på vei til filteret gav Excel resultater et avvik på 3,4%, mens det rene vannet som kom ut av filteret og inn i nettverket hadde resultater med avvik på 16%. Mulige årsaker til at avviket på det rene vannet var så mye høyere er sannsynligvis på grunn av tilbakeslagsventilene etter te fire parallelle filtrene. Disse tilbakeslagsventiler brukes for å sikre en ensrettet strøm i behandlingsanlegget. Den enkle trykktapskoeffisienten hadde store svingninger for de testede strømningshastighetene. Koeffisienten ble beregnet til å være så lav som 5,12 per ventil, og så høy som 19,9 per ventil.

Det prosentvise avviket i de beregnede teoretiske resultatene kan bli redusert ved bruk av og ytterligere videreutvikling av Excel-regneark. Dette kan gjøres ved bruk av regnearket til å sammenligne det beregnede teoretiske trykktapet med de observerte resultatene i andre drikkevannanlegg. Det kan også brukes for videre evaluering av Treungen-anlegget. Ved å øke antall renseanlegg hvor observerte resultater kan sammenlignes med de som fremstilles ved dette regnearket, kan en endelig forbedret versjon fremstilles, som vil være i stand til å redusere arbeidsmengden ved planleggingen av nye drikkevannanlegg.

CONTENTS

1 Introduction 12
1.1 Background on Treungen Water Treatment Plant 12
1.2 Hydraulic Evaluation 12
2 Theory 14
2.1 Pressure and Pressure Loss Within Systems Piping 14
2.2 Unit Processes at the Treungen Treatment Plant 18
3 Methods 21
3.1 SolidWorks 21
3.2 Physical Measurements 22
3.3 Excel 28
4 Results 34
4.1 Physical Measurements 34
4.2 Theoretical Values Obtained Through Excel 39
5 Discussion 42
5.1 Observed Pressure Losses 42
5.2 Theoretical Pressure Losses 48
5.3 Observed vs Theoretical 52
6 Conclution and future work 57
6.1 Conclusion 57
6.2 Future Work 58
7 References 60
8 Appendix 63

1 INTRODUCTION

The design of a drinking water treatment plant is a demanding and time consuming process, that takes carefully consideration and calculation. The plant must be capable to providing enough water to the network, while fulfilling all treatment requirements set in place by the Norwegian Food and Safety Authority. The quantity and quality of the clean water production are the two main aspects of designing a drinking water treatment plant and are highly dependent on the treatment plants hydraulics.

The hydraulics of the treatment plant must be evaluated in order to design a system that will function properly and provide the desired production with out compromising the quality. Calculating the hydraulics of a water treatment plant can be a difficult and time-consuming task, as the pressure loss through the entire plant is a function of its dimensions, materials used, processes undergone and desired end of treatment capacity. Currently, a common method for calculating a plants hydraulics is to use Microsoft Excel worksheets to calculate the different aspects of the plant for a complete overview of the plant. The process of creating and connecting several excel sheets is a complex and time-consuming process. This process could be greatly shortened through either computer modeling of the treatment plant or the use of a reusable excel file that can be easily maintained and used for the evaluation of future water treatment plants.

In order to assess the validity of excel as an assessment tool, a prototype excel file has been produced using an existing drinking water treatment plant as a model. Thus, the theoretical results can be compared to those obtained in the real world. For this, a drinking water treatment plant located at Treungen has been chosen, as it is a new treatment plant having only recently been set into operation in 2015.

1.1 Background on Treungen Water Treatment Plant

The drinking water treatment plant located in Treungen, is capable of producing 40 liters of clean water per second, or 3456 cubic meters per day. It has been designed using a coagulation/filtration process in addition to ultraviolet (UV) disinfection. It has also integrated into its design the ability to use chlorine if needed. The drinking water is produced using a surface water source, a lake called Nisser, located next to the treatment plant with a water intake located 40 meters below the surface and 130 meters from the actual plant. Water is pumped into the plant using three pumps in parallel, where it is then dosed through a pulse dosing with the coagulant Iron Chloride Sulfate (JKL). Once the coagulant is added, the water flows through a static mixer, before being distributed into four filters in parallel. These filters are composed of three media; Filtralite, sand and crushed marble. This three layer process is referred to as the Molde process and is a common method for surface water treatment in Norway. After filtration, the water passes a UV disinfection process before entering a clean water storage tank and then being sent to the drinking water distribution network.

1.2 Hydraulic Evaluation

The hydraulics of the Treungen drinking water treatment plant will be calculated and evaluated with the help of architectural program Revit, as well as the spreadsheet software Microsoft Excel. Revit is a product produced by Autodesk used to design buildings and

structural components in 3D. It is a very common program for consulting firms, as it also contains a highly functional 2D drafting space. Revit is also capable of computational fluid dynamics (CFD), but this aspect of the software will not be used for evaluation as it is primarily used in industry for modeling of ventilation systems. The main purpose of the Revit model in this particular case, is that it is a complete model of the plant and contains all specifications for sizing fittings, accessories and quantity and size of pipes.

While Revit is focused around its ability to be used as a 3D modeling program, Microsoft Excel a spreadsheet program capable of solving equations and producing charts and graphs. It is also possible to doe some programing within Excel Visual Basic Editor. Microsoft Excel is capable of many things, and is proficient at performing complex calculations, but the weakness of excel, which is a contrast to the strength of simulations in Revit, is that the majority of the calculations need to be entered manually, instead of a simple interface for needed variables. This means that while an individual may be proficient in both programs, results may be generated quicker in modeling software, than in Excel.

The evaluation of the hydraulics for the treatment plant will entail an examination of the pressure losses and gains throughout the system as a function of water flow within the plant. The losses are due to friction within the piping network, unit processes and elevation changes, while the gains are due to pumping situated throughout the plant. In order for an Excel spreadsheet to function properly, it must be able to evaluate all aspects of the fluctuating pressure and produce reliable results based on the given factors.

2 THEORY

The hydraulic evaluation of the Treungen drinking water treatment plant within Microsoft Excel, takes advantage of Excel's ability to automatically update cells based on the alteration of its dependent cells. Within Excel, cells can either hold text, numbers, charts, graphs or pictures. Text and numbers can either be added as direct input by the user, or as equations and functions. These equations and functions are directly dependent on other cells values or text. Excel has the ability to use any inserted equation, along with a vast array of functions, to produce a new value within the dictated cell based upon alterations in input values. Given this possibility, it should be possible to calculate the pressure losses through an entire drinking water treatment plant by altering only the value of the flow entering the plant.

Within the developed workbook, the results are flow driven. Once a flow is entered, several theories of internal pipe flow, unit/singular pressure loss and pressure loss through unit processes will be simultaneously calculated to determine the pressure losses through the system. These losses are calculated using, among other things, the theory of continuity, the Datcy-Weisbach head loss equation, the Colebrook equation and Bernoulli's equation for viscous flow.

2.1 Pressure and Pressure Loss Within Systems Piping

Throughout a drinking water treatment plant, or a water distribution network, pressure losses are constantly occurring. These pressure losses are due to several factors such as elevation change, friction losses between the water and the inner surface of the piping, and singular losses at points in the system such as valves, forks and bends in pipes. These are referred to as major and minor losses and are the basis for calculating the pressure drop within the system.

There are several ways to measure the pressure within a treatment plan, but the two methods will be used for testing and validation of the Excel file results. One of the first, and simplest methods is to measure the water surface level in any storage tank, or open surface unit process. As the water surface elevation is equivalent to the total elevation of the pressure. The second, a common method for measuring pressure, is to attach a manometer to a water-sampling valve. A manometer is a gauge, much like a pressure gauge on a bike pump; capable of measuring the pressure at the point it is attached. These are commonly placed before and after pumps, especially for larger scale pumps, such as those that distribute water to the actual drinking water network.

Pressure is important in a treatment plant, as it is the driving force moving water through the pipes and unit processes. If there were to be a loss in pressure, then water would cease to flow and the plant would stop producing clean water. Given that pressure is the driving force, it is important to know and account for how much will be lost through the systems internal flow conditions and unit processes.

2.1.1 Total Head

Head is a term synonymous with pressure and is defined as the fluids energy per unit weight [14]. Head is divided into four catagories, velocity head, elevation head, pressure head

and friction head (also referred to as head loss). Total head is the combination of these four, as they act together to increase and decrease the waters energy and dictate the internal pressure of system. Equation 2.1.1 shows this simple equation for head at a given elevation. The fact this it is for a given elevation is important, as if there is an increase in elevation, the pressure/head will equal to the vertical height. The inverse is true for a decrease in elevation, as the pressure/head will increase.

$$H_T = h_g + h_f + h_s$$

Equation 2.1.1: Total head for a given elevation

The waters energy, or head, is measured in meters of height, as it refers to where the water surface elevation would reach if vertically unconfined. Figure 2.1.1 shows how pressure head and velocity head work together to create the total head within a pipe. Pressure head is a static measurement of the pressure, where the velocity head shows how the energy pushing the water forward adds the velocity head to the pressure head. Resulting in the total head of the system.

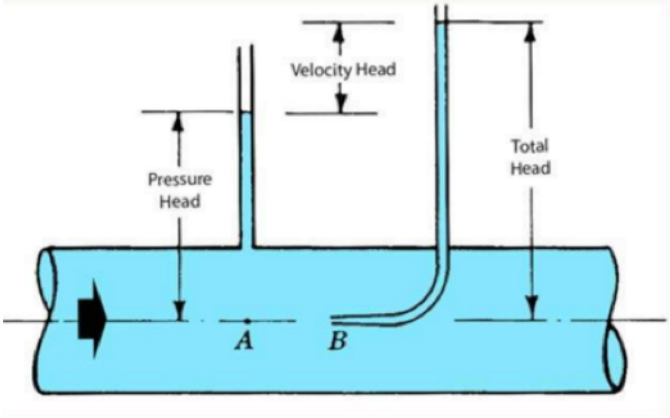

Figure 2.1.1: Pitot tube showing how velocity adds to the total pressure [1]

The idea of head is important to remember while evaluating the hydraulics of a treatment plant, as it shows how the internal forces acting upon system change throughout the system. While pressure, velocity, and elevation head all work to push the water further along in the system, friction head works against the others and decreases the total amount of head as water travels through a system. Friction head, or head loss, can be divided into two categories; Major Losses and Minor Losses, and are discussed in detail in section 2.1.2.

2.1.2 Major and Minor Losses

As water travels through a system or network, pressure losses occur that are independent of the changes in elevation. These losses are due to internal friction from the pipes surfaces and singular units from things such as fittings and bends. These losses are referred to as Major and Minor Losses, with major losses referring to the internal friction and minor losses referring to the singular changes, thus leading to them to also be known as singular loses.

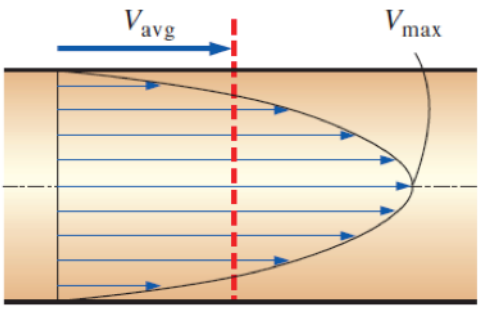

Figure 2.1.2: Visualization of average flow velocity in a pipe [20]

Major pressure losses occur along the inner surface of pipes due to the surface friction and are dependent on several factor such as pipes diameter, material used, velocity and the pipes length. As water travels through a confined pipe, the friction, dependent on the material in the pipe, slows the velocity of the water along the pipes surface. This leads to the velocity profile appearing as a cone through the pipe as pressure

head is lost due to internal friction. Thus the water with the highest velocity is located at the center, as can be seen in figure 2.1.1.

Major pressure losses in a length of pipe can be calculated using the Darcy-Weisbach equation for internal flow pressure loss, as seen below in equation 2.1.2. This equation shows that the head loss due to the friction is a ratio of the pipes length and waters velocity to the pips diameter. That ratio is then adjusted by the Darcy-Weisbach friction coefficient. This friction coefficient, *f*, is used in the equation 2.1.2, is dependent on several factors. Factors such as the Reynolds number, roughness of the internal pipe surface and the hydraulic diameter. These factors can be used to help obtain the fiction coefficient through help of the Moody Diagram. The Moody Diagram [Appendix B] is used to assign a value to the friction coefficient for a given k, meaning a different diagram must be used for different pipe roughness's. This is important to note as the flow conditions may change, changing the *f* value, as the friction will remain the same, but the point on the diagram will shift. While the Moody Diagram is easy to use and provides an accurate value for *f*, it is very difficult to implement this into an auto-calculating/updating worksheet such as in Excel. Thus, another approach will be used in the form of the Colebrook Equation (see equation 2.1.3).

$$h_f = f \cdot \frac{L}{D} \cdot \frac{v^2}{2g}$$

Equation 2.1.2: Darcy-Weisbach major loss equation (14)

The Colebrook equation is a half empirical formula used for calculating the coefficient of friction factor. It is noted as being an unmanageable equation in its implicit form [14]. Given the equations difficulty to be used, there are several approximations of the Colebrook equation, such as the Swamee-Jain equation [21]. While these approximations may be able to provide results with a reasonable degree of accuracy, it should be noted that they are only an approximation, and not an accurate solution to the Colebrook equation. Instead, to gain an accurate result, it is possible to use the Colebrook diagram for a given roughness factor. The Colebrook diagram [Appendix C] is able to give a pressure loss in meters per kilometer or millimeters per meter. The Colebrook equation is also the basis for the Moody diagram, as both the Moody and Colebrook diagrams can be used for finding the pressure loss through an internal pipe flow system [14].

$$\frac{1}{\lambda^{1/2}} = -2log\left[\frac{2.51}{Re * \lambda^{1/2}} + \frac{\left(k/d_h\right)}{3.72}\right]$$

Equation 2.1.3: Colebrook's equation for finding the Darcy-Weisbach friction coefficient λ, (λ= f).

The second variant of pressure loss, minor or singular loss, in a system are pressure losses due to turbulence caused by all other elements within the transport network (excluding processes) such as pipe bends, valves, tapers/expansions and entrances/exits from storage tanks. Singular losses are dependent on the hydraulic coefficient related to the geometry, k_s, and the velocity of the water (see equation 2.1.4) [14].

The value of the hydraulic coefficient is dependent on the type of geometry or connection such as the bends radius and the type of valve. For example, an elbow joint that is threaded and has a radius of 90˚ will have a hydraulic loss coefficient of 1.5, while the same type of bend, only flanged instead of threaded, will have a hydraulic loss coefficient of 0.3 [5]. This large variation in resulting total minor loss from a single component shows the importance of these singular losses. It also shows the

$$h_s = k_s \cdot \frac{v^2}{2g}$$

Equation 2.1.4: Singular loss for points in the system [14]

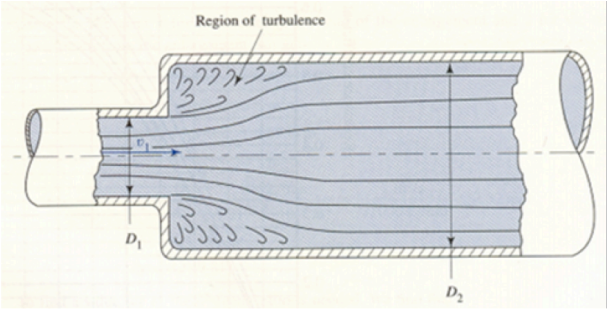

Figure 2.1.3: Example of singular loss due to a disruption in the laminar flow/turbulence

importance of selecting the components and fittings used in a system. Appendix D has an overview of these factors and can be used to show the importance of selection, such as the case with choosing threaded or flanged elbow bends.

The geometry of the fittings and accessories, such as the bends, contractions, expansions, and valves placed throughout the system are all causes of minor loss. Minor loss is due to the obstruction of smooth flowing water through the pipe that can create turbulence, such as can be seen in figure 2.1.3. This figure demonstrates water entering a sudden expansion of diameter within a pipe. In this case, the turbulence is created surrounding the exit, and will manifest as a minor loss in pressure. Other examples are an elbow bend, where the water is disrupted along the inner side of the bend, resulting in turbulence that will also lead to a minor loss in pressure.

The majority of the singular losses created by pipefittings and accessories are very minor, and given a large system, will not register in the overall pressure loss. This is why they are referred to as minor losses. However, while these minor losses are usually just a small portion of the overall pressure loss, they can become extremely large as valves are partially closed. A great example in how some singular losses can be easily changed can be found in appendix D example of a ball valve. An open ball valve will have a pressure loss coefficient of 0.05 while fully open. Now if that ball valve were to be closed 2/3 of the way, the singular loss coefficient would skyrocket up to a value of 200.

A final important note to mention, is that while a rule of thumb minor loss coefficient may be given for many different types of valves and accessories. Not every one of them will actually operate with a similar loss coefficient. An example of this could be a butterfly valve. A butterfly valve can be given a general value for its minor loss coefficient, but the fact of the matter is, two valves from different companies, will have different dimensions and produce different losses. This is because the turbulence produced by the two may not be the same, as the thickness of the butterfly valves valve is directly related to the minor loss coefficient. Given this, it is important to never take a loss coefficient for granted, as it may not match that of the intended unit.

2.1.3 Alternative Method for Calculating Head Loss

Pressure loss can be easily calculated by methods other than Darcy-Weisbach. A great example of this would be the use of Bernoulli's equation for compressible flow. Bernoulli's equation states that the combination of the density, viscosity, elevation and velocity can be compared between to points in order to obtain the pressure loss. It states that the summation of these ratios, as seen in equation 2.1.5, from point A, will be equal to the summation of these ratios plus the loss in pressure at point B.

$$\left(\frac{\rho_1}{\gamma_1} + z_1 + \frac{v_1^2}{2g}\right) = \left(\frac{\rho_2}{\gamma_2} + z_2 + \frac{v_2^2}{2g} + h_{tap}\right)$$

Equation 2.1.5: Bernoulli equation for compressible flow [14]

Bernoulli's equation has many different uses, but for the purpose of this paper, the focus will be on the use of the Darcy-Weisbach equation for pressure loss.

2.2 Unit Processes at the Treungen Treatment Plant

Pressure losses throughout a drinking water treatment plant are due to more than just the internal friction of the system, the selected components or fittings and the elevation gain. There are other losses due to unit processes, or treatment step, used to obtain the desired degree of water quality. A unit process is a step in the waters cleaning process designed to improve the waters quality, such as a filter, bioreactor or UV disinfection unit. The unit processes built into the design of the Treungen drinking water treatment plant are a combination coagulation and filtration, along with a UV disinfection light.

2.2.1 Coagulation and Filtration

Coagulation and filtration involves the addition of a coagulant to the raw water prior to filtration. The water and coagulant will then pass through a static mixer, designed by Martin Meltzer of Asplan Viak, designed to blend the coagulant into the water as it passes through by disrupting the flow and creating a high amount of turbulence. This process helps to increase the contact between coagulant and the suspended solids in order to form flocks which will increase particle removal. The coagulant chosen for the treatment plant is Iron Chloride Sulfate (JKL), as it is best suited for the surface water characteristics of Nisser.

After the JKL coagulant has been properly mixed, the water will then be passed through the filtration system. The filtration system at Treungen is composed of four filters in parallel, meaning that the total amount of water passing through a filter at any specific time is only a quarter of the total water being processed. This is very useful as it is possible to take a singe filter out of operation for backwashing or maintenance and still only need to have a maximum water flow of one third of the total flow. The filters in use at the Treungen treatment plant are a combination of Filtralite, sand, and crushed marble. This three layer combination is common filter arrangement for cleaning surface water in Norway, and is referred to as a Molde Process, giving homage to the location of its first use.

The pressure drop through a rapid gravity filter is most likely the largest pressure loss for any drinking water treatment plant. As water is permeated through the filter media, the media traps the coagulated particles, pressure is lost. To begin with, pressure is lost due to the friction from the filter media itself. As water passes through the filter, the media collects more and more of the coagulated particles, and the friction between the filter and the water increases. While the increase in particles within the filter creates a larger amount of head loss, the head loss is calculated using the Ergun equation for clean bed head loss (equation 2.2.1) [15]. Meaning that the head loss calculated is for a newly rinsed filter with no particles to increase the pressure loss. The Ergun equation is used to calculate the head loss through each layer of the three media filter, and the sum of the layers losses is the total head loss through the filter. The head loss through each layer is dependent on the coefficients due to viscous and internal forces related within the filter media, as well as the filter velocity, porosity, effective size, filter depth, water density, water viscosity and the gravity constant.

$$h_L = K_V \frac{(1-\varepsilon)^2}{\varepsilon^3} \frac{\mu L v}{\rho_w g d^2} + K_| \frac{(1-\varepsilon)}{\varepsilon^3} \frac{L v^2}{g d}$$

Equation 2.2.1: Ergun Equation for Clean Bed Head loss through a single media [15].

Over time, filters will become clogged with the very particles they are designed to remove and the pressure loss will increase. This will cause the clean bed head loss equation will become invalid with time. To counteract this additional pressure loss, filters periodically undergo a process of aeration and backwashing to remove these particles. Aeration and backwashing is the process of forcing air upwards through the filters media to agitate and loosen the slime, caused by the coagulant, from the filter media. It is then followed by the backwashing, a process of forcing water in through the bottom of the filter in an upwards direction causing the clogged particles to flow over the top and into the filters spillway. The water is sent to the storage tank for untreated waste water, to be treated at the neighboring treatment plant.

The aeration/backwashing process removes the particles and slime trapped within the filters media causing large pressure losses as water is treated. The timing of backwashes is determined either by elapsed time, or volume of water treated. In the case of the Treungen treatment plant, backwashing is dictated by elapsed time. Here, a duration of 75 hours since the previous backwash has been chosen. However, an important note is that the Treungen treatment plant is not always producing water, so the volume of water that has been treated may vary, thus, some treatment plants will use a predetermined volume of treated water to initiate the backwashing process.

All of the pressure measurements taken in regard to pressure losses through a filter were taken on filter number four of the treatment plant. This is in large due to the fact that upon arrival to the treatment plant, filter number four had been in operation for approximately 70 hours, and was the next filter scheduled for backwashing. Given this, the pipe section capable of attaching a manometer was installed prior to the filter pump, and pressure readings were taken for pressure loss after 72.3 and 72.5 hours of operation. Once these losses were recorded, the system was manually overridden to start the backwashing process, after approximately 73 hours of operation. At this point, the filter had successfully treated 194 cubic meters of water.

Preparing a filter for water production after a backwash is a very important step, as it increases the drinking waters quality. The waters quality is dependent on several parameters, with turbidity being one of the easiest to automatically test. Turbidity is caused by particles suspended within the water that can cause cloudiness, however, they are generally not noticeable to the naked eye. Turbidity can be used to evaluate the filters effectiveness over time, as an increase in turbidity is a sign that it is time for a filter to be backwashed.

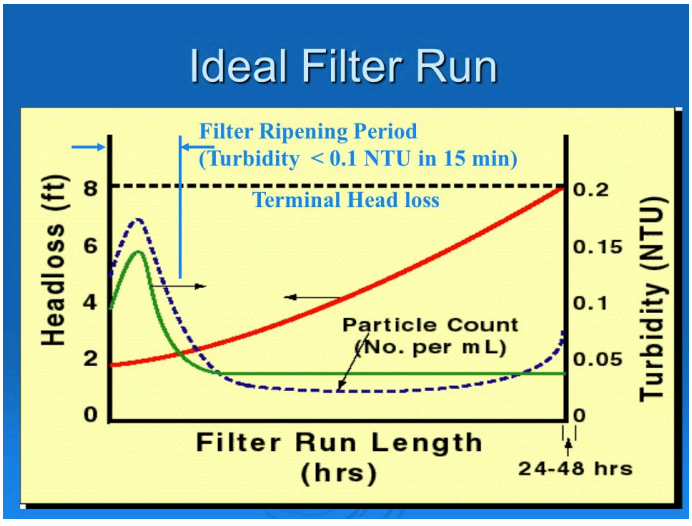

Figure 2.2.1: Turbidity vs. time in filter ripening process [10]

Immediately after a filter is backwashed, and water begins to filter through again, the turbidity will be relatively high. To counteract this, the filter will undergo a ripening process to increase its performance. This water is then sent straight to the sewage system while the filters

pore are filled with trapped particles and the filters performance increases. This increase is noticeable by watching the waters turbidity over time. This process is referred to as the ripening process and can be seen in figure 2.2.1. Figure 2.2.1 shows a graph demonstrating the values of pressure loss and turbidity over time. Pressure loss will gradually increase over time as the filter amasses more particulates. The turbidity will be large at the start of the filter run, but by the time the ripening process is finished, the turbidity will be within the regulated limit, and will remain below this limit until it begins to raise, signaling the need for the filter to be backwashed again.

2.2.2 UV Disinfection

The process of UV disinfection entails the passage of water through a unit filled with ultraviolet light bulbs. As the water passes through, the ultraviolet light kills the microorganisms. The effectiveness of the UV disinfection is based its dosage, which is combination of the lights intensity and the contact time. The internal design of a UV disinfection unit is relatively simple. Water enters the unit where UV lights are placed, typically in parallel with the direction of flow, then the water exits. The entire process is simple and compact. Pressure losses through a UV disinfection unit are mainly due to turbulence through the system, such as with a singular loss, due to the UV lights causing friction and disturbing the path of flow.

3 METHODS

The original driving force behind this paper was the use computer software capable of computational fluid dynamics (CFD) to model the pressure losses within elements of a drinking water treatment plant and compare the generated results. CFD software is capable of analyzing a fluids flow through a system by use of complex algorithms, producing highly analytical results. However, given unforeseen licensing issues, the scope and focus of this paper was pivoted. Instead it focuses on creating a reusable workbook in Microsoft Excel that can be easily recycled to quickly calculate the pressure losses and gains within any potential drinking water treatment plant.

In addition to calculating the theoretical pressure loss within the Treungen drinking water treatment plant, physical measurements were also taken. These physical pressure measurements were taken at several points in both the clean water and raw water sections of the system. They were then used in collaboration with the surface water elevation of the filters and the storage tank to calculate the pressure loss within the treatment plant for different flow scenarios. All of the calculations were preformed with the help of excel, and the resulting spreadsheets can all be found within the appendix.

3.1 SolidWorks

While licensing issues prevented the main objectives of this paper from being completed, a short effort was made to model the UV disinfection process in the 3D modeling program SolidWorks. SolidWorks is an excellent tool for the evaluation of fluid flow through a piping system. However, while a highly trained professional may be able to make quick use of the program to solve the fluid dynamics of a system, the program has its setbacks for those who possess only a beginner's knowledge of its workings.

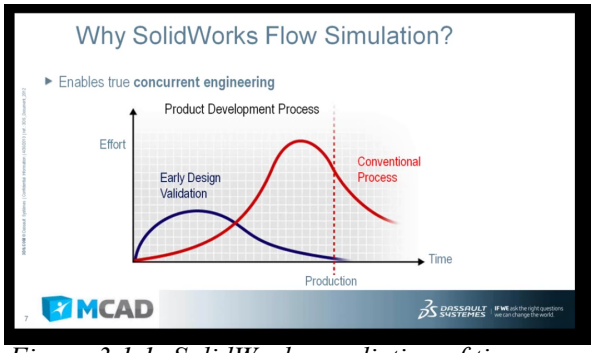

Figure 3.1.1: SolidWorks prediction of time usage.

Through the shot exploration of SolidWorks, several methods were explored for the importation of the given data in order to build a functioning model. SolidWorks is very confident in their product and its ability to save time and work in the long run by obtaining early validation of a system. They have produced a graph seen in figure 3.1.1 showing how an initial use of the CFD software can help to decrease overall time and effort used for developing a design.

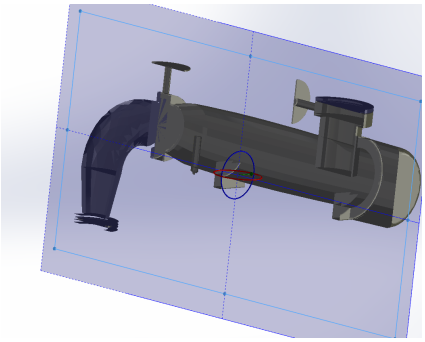

Figure 3.1.2: Failed import of a .dwg file. Some aspects of the geometry are missing.

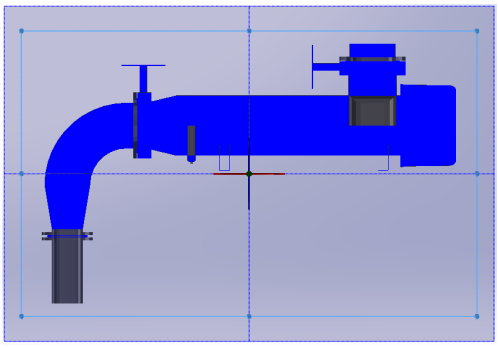

Figure 3.1.3: Failed import of a IGES file. The blue is solid material, meaning there is no way for water to flow through.

The model of the Treugen treatment plant, was provided within Revit, producing some issues with importation of the model to Solidworks. Revit files are not compatible with SolidWorks, leading to an array of issues with the importation of the model. In order to open the model within SolidWorks, it needed to be exported as a geometry model to AutoCAD, where it could again be exported in a new format. The first effort was to export a section of the model as a .dwg file. This however failed as the model imported did not contain all of the geometry needed to make a functioning model. The second attempt was to export the file as a geometry file again to AutoCAD, and import it as an IGES file. Yet again, this failed to work, as each fitting an accessory was imported as a solid object. The final method used, was to export the .dwg file from SolidWorks as a .step file, and re import it from AutoCAD as a new .step file. Yet again this failed as the majority of the geometry went missing, leaving only a few small aspects of the original design still in place.

In the end, the only file that proved to be beneficial as an export from Revit, were the material lists containing the quantities of pipe. This was exported as a text file containing the total amount of piping, broken into length and diameter of each pipe. This text file could then be imported into excel and a pivot table could be formed to condense the information and provide a total amount of each sized pipe used within the treatment plant model.

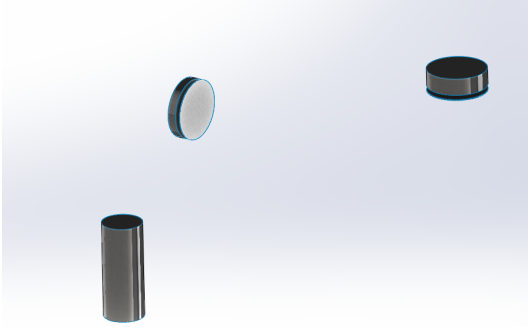

Figure 3.1.4: Failed use of a .step import. As can be seen, the majority of the geometry was not imported into SolidWorks.

3.2 Physical Measurements

In order to validate and calibrate the theoretical pressure losses produced within Excel, it is important to have reliable physical measurements for comparison. Thus, physical measurements were taken at the Treungen drinking water treatment plant. The tests were carried out over the course of two days with the help of Martin Meltzer and Ole Bjørn Lauvdal Tests were performed in such a manner, that it was possible to test pressure losses through the system for various flow rates and filter conditions. This was possible as the treatment plant has a clean water storage tank capable of holding over 80 cubic meters of water in addition to the distribution network housing a water town. Thus the amount of water being produced and delivered to the network could suffer.

The test preformed within the treatment plant can be split into three main areas of focus; clean water, filter water and raw water. Raw water is just as it sounds, the raw water entering the treatment plant. It is considered raw water from when it enters the plant, passes through the static mixer, and enters the filter. Filter water is entails solely the filter, and clean water entails the water after it has exited the filter pump all the way until it has reached the

clean water storage tank. By dividing the pressure losses between these sections, it becomes easier group the pressure losses to specific pressure zones within the treatment facility.

The treatment plant is currently run by an automated system installed by Normatic. This system is controlled through the use of pneumatic valves and electronically regulated pumps. The pumps are designed to operate automatically at different intervals, depending on the water surface elevation within the storage tank and the filters. The pumps for the filter and intake are programed to operate at three pre determined flow rates. They will deliver a large amount of water if the water level within the filter or the storage tank drops below a specific point for longer than a pre specified time. Otherwise, they are ramped down once the surface level is within a specified range. Finally they are programed to shut off if the water level reaches its overflow point for longer than a predetermined time.

3.2.1 Method for Pressure Measurements

In order to obtain reliable results, it is important that all measurements are done in a reliable manner. Physical measurements taken from the Treungen drinking water treatment plant were taken using a digital manometer. The manometer was connected to a two-valve section of pipe with flexible hydraulic cables leading to one or two separate measuring points. This allows for the ability to simply adjust the valves by closing one, and opening the other to obtain two separate pressure readings without having to move the manometer, thus making for simple before and after pressure readings from pumps and components.

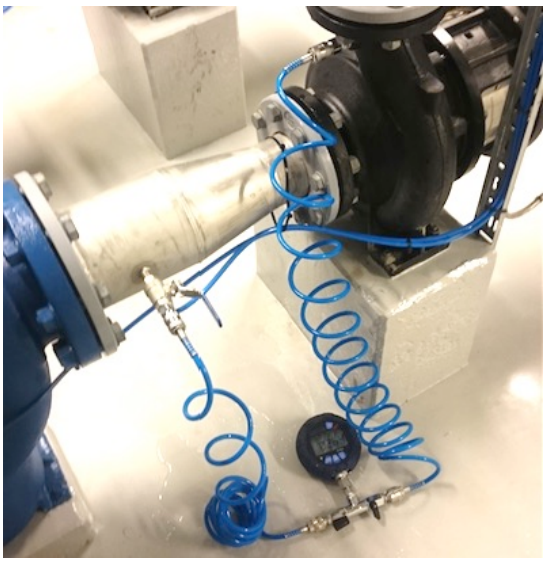

Figure 3.2.1: Digital Manometer attached via hydraulic cables to points before and after a pump.

Along with the use of use of the manometer, pressure can be determined by the water surface elevations of both the filter and the clean water storage tank. This makes for total pressure losses such as that from the filter pump to the storage tank easily obtainable. These aspects of the water surface level and the digital manometer reading, are capable of providing sufficient data to compare the theoretical pressure losses with those observed at the treatment plant.

3.2.2 Clean Water Test: Pre and Post Filter Pump

In order to improve the available data by increasing the number of measurement points, a small section of piping was removed between the filter exit and the filter pump and replaced with one capable of measuring pressure from. This process proved to be a complicated manner as the piping used while building the treatment plant at this section proved to be a full centimeter shorter than what the plans called for. However, through a process of dismantling part of the connecting piping, and unbolting the filter pump from its foundation, the piping was installed.

Once the pipe was in place, and the system sealed and leak free, it became possible to measure the pressure leaving one of the filters. This in turn meant that the pressure loss through the filter could be calculated using the filters water surface level as the beginning pressure, and the pressure before the pump as its ending pressure. Measuring this loss involved pressure readings before and after the filters pump, along with the water surface levels of the filter and storage tank. This provides a loss for both through the filter, and between the filter pump and the storage tank. The pressure reading was taken from within the pump, on the pressure side as to give the most accurate value possible for pressure leaving the pump. The pressure was then tested for a flow rate of around 0, 3 and 6 liters per second.

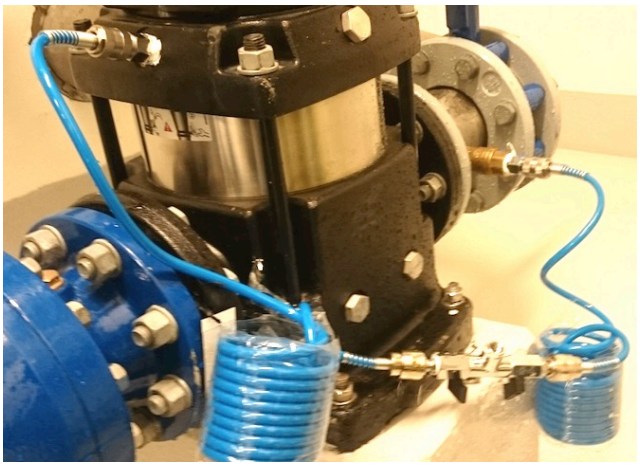

Figure 3.2.2: Placement of pressure readings pre and post filter pump.

These pressure readings are very valuable, but it is very important to note that the head loss through a filter is not constant over time. Filters pores gradually become clogged with particles leading to an increased loss in pressure. This decreases the filters performance and is the reason filters must be backwashed.

Once the filter has been backwashed, it undergoes a ripening stage where water passes through the filter to help increase its effectiveness by maturing the filter bed. This water cannot be sent to the network as its turbidity is too high. Instead it is returned to the drinking water source. The ripening process takes approximately 50 minutes before the flow is tapered down and the valve is switched diverting water from the return system to the drinking water system. Throughout the ripening process, pressure measurements were taken at 20-minute intervals, starting approximately eight minutes after the initiation of the process to allow of the flow to stabilize. This provided three pressure readings through the filter at a constant flow rate of 6 liters per second during the ripening stage. Once the ripening stage was complete, two more pressure readings were taken to provide a comparison of pressure loss through a clean and dirty filter.

3.2.3 Clean Water Test: Post Filter Check Valve

Once the pressure readings for pressure loss through the filter were complete, focus shifted to the performance of a check valve immediately following the filter pump. A check valve is a particular type valve that only allows for one directional flow. It is designed so that pressure from the wrong direction will cause the valve to close. These valves are typically placed after a pump and serve as a one directional barrier between pressure zones, as they prevent water from flowing backwards into the pump once the pump has been shut off. The check valve was chosen as a

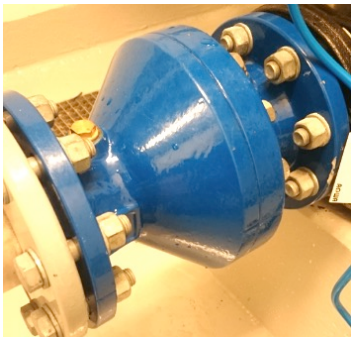

Figure 3.2.3: Outer view of a check valve

measurement point since a check valve is dependent on pressure to open it, and it my not fully open under low flow situations. Refer to appendix E to better understand the internal geometry of a check valve.

To test this theory, the check valve following the filter pump for filter number four was chosen for testing. It was chosen as the pre check valve pressure measuring point was already ready to measure, and a second measuring point could be used shortly following the valve, located immediately following a 90-degree elbow bend following the check valve.

Figure 3.2.4: Pressure reading arrangement for check valve

The pressure values for before and after the check valve were taken a total of four times. Values were read once for flows of approximatly1.5 and 6 liters per second, and twice for approximately 3 liters per second. The pressure gauge was placed upon the floor, as in the previous test, to simplify the pressure loss calculations as each pressure is read from the same reference point. These values can then be integrated into the minor loss equation and a singular loss coefficient can be calculated. Given the value of the coefficient, it is then possible to determine if the valve is fully opening or if it is only opening partially.

Before removing the pressure gauge from the filter pump, a final value was observed. This final value was the pressure experienced in the pump while it was shut off. This pressure can then be compared to the filters water surface elevation to determine the pore water pressure loss. This value is important as it can be used for calibration of measured results.

3.2.4 Clean Water Test: Post Filter Pipe Combination

Using the previously mentioned theory of a water surface elevation being equal to the systems pressure at that point, a final clean water pressure test was preformed to determine the pressure loss through the clean water system, including the UV disinfection. This pressure reading was taken after the four separate filter pipes have all combined into one pipe. The pressure loss from the piping along with the UV disinfection should be able to be measured by comparing the surface water pressure of the clean water storage tank, and the measured pressure of the combined filter exit pipe. As with previous testing, pressure readings were recorded for several flow conditions, in this case approximately 6, 12 and 24 liters per second (equal to the 1.5, 3 and 6 l/s per filter flow rates).

Figure 3.2.5: Pressure reading post filter pipe combination

3.2.5 Raw Water Test: Pre and Post Intake Pump

The second day of pressure measurements focused on the hydraulics of the raw water entering the treatment plant. The first test performed was to measure the pressure entering the plant with only a single intake pump in operation. This will obtain the pressure of the water sources water surface elevation and the pressure prior to the intake pump. It will also provide the original pressure for the water traveling to the filters. The test started with making sure the gate valve above the intake pumps check valve was fully open, as to prevent any unnecessary pressure loss. The tests involving the intake pump were preformed in a slightly different manner than the filter test. They were not run based on a given flow, but rather by manually forcing the pumps to operate at a given frequency. For the raw water tests, these frequencies were chosen to be 40 Hz and 50 Hz. While the flow may not have been the focus, this resulted in constant flows for each test of 22 and 37 liters per second. The pressure values obtained were then used together with the water surface elevations of the source water and the filter to find the pressure losses accordingly. For the first two tests, the height of the water overflowing from the filters was measured, as the height above the overflow lip can be used to calculate the total pressure of the water surface, as the overflow channel allows for this pressure to escape and prevent the water surface level from raising further.

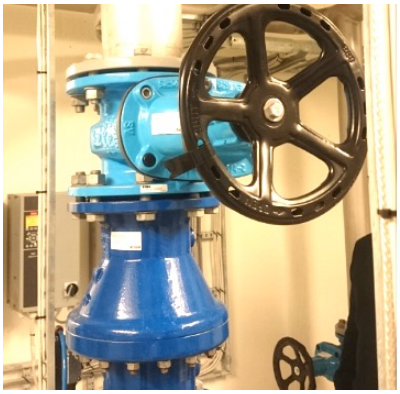

Figure 3.2.6: Gate valve above intake pumps check valve

When the gate valve was opened, it took 21 rotations to go from fully closed, to fully open. For the last three tests, the gate valve was closed half way, or 10 rotations. The pump was then run again with a frequency of 0 Hz and 50 Hz. These values along with the water surface were again used to calculate the pressure loss. The only value that is missing from these tests, is the depth of overflow from the filters to the overflow spillway. This will make a difference in the results values, but as observed during these tests, the sound of water spilling over into the spillway was absent for both tests, but no visual confirmation was obtained.

3.2.6 Raw Water: Pre Pump Filter Pressure Loss

Some surface water drinking water treatment plants will use a fine screen around the water intake to protect large and small organic and inorganic matter from entering the system. This however requires a yearly maintenance by means of a diver physically cleaning the screen/filter. Instead, the treatment plant in Treungen uses a small filter placed in front of each of the intake pumps, see appendix F, which can be cleaned easily from inside the treatment plant. As the pressure gauges were already attached post intake filter, and pre intake pump, the post intake pump gauge was moved to measure the pressure from the pre intake filter along with the

Figure 3.2.7: Pre pump filter and fully open gate valve

accompanying gate valve which was double checked to be fully open.

As with the previous raw water test, the pumps were run on 0 Hz, 40 Hz and 50 Hz. The pressures were then recorded and the losses calculated. As with previous measurements, the pressure gauge was placed on the floor as to record the pressure from a known reference elevation.

3.2.7 Raw Water: Pre Pump Post Pump Collection Pipe

A final pressure test was conducted using the pre intake pump as a pressure measuring point, but with a second measuring point located in the pipe after all three pumping stations had collected together. The pre pump value should mimic the earlier recorded results, while the second measuring point should be able to be correlated with the earlier values and produce the pressure loss though a half open gate valve along with the larger check valve used for the intake pumps. The tests were conducted at 0, 40 and 50 Hz as per the previous procedures. The value from the second location is also valuable as it can be compared to the water surface level within the filters and help to calculate the pressure loss through the static mixer, which received its own pressure drop readings described in section 3.2.8.

Figure 3.2.8: Pressure pre pump and post collection

3.2.8 Raw Water: Static Mixer

Of all the pressure readings obtained, the observed pre and post pressures of the static mixer measured through the use of the double access apparatus, was the most difficult. It is possible to run all of the tests from a single point, and repeat the procedure for a second point, but by using the apparatus and having the possibility to record two pressures in very rapid succession, it is possible to eliminate any small errors that could occur through separate testing. It also ensures that the pressure readings are taken from the exact same reference

Figure 3.2.9: Difficult situation for reading pressure for pre/post static mixer.

point.

In order to measure the pressure loss through the static mixer, a location within the vertical piping transporting the water from the intake pump to the mixer was taken as an initial pressure along with a post mixer pressure taken almost immediately following the mixer after only two to three meters of piping. This point was located before the water splits off and begins to enter the filters. For the tests involving the static mixer, the usual protocol of 0 Hz, 40 Hz and 50 Hz was followed, but an additional test was preformed. In order to truly see how much pressure would be lost at high flow rates, a second pump was turned on to total in two pumps operating in parallel at 50 Hz each. This produced a flow too large for the digital display of the electro magnetic flow meter, but was relayed to the operational control panel as being 68.07 liters per second. Almost 30 liters per second more than the maximum design value of the plant. It should be noted that for this test, one gate valve above the intake pumps was completely open, while the other was half way closed. The overflow depth of the filters was also measured for this test.

As previously mentioned, this test proved to be difficult to set up as the distance between the two measurement points pushed the limits of the possible maximum separation for our equipment. As can be seen in figure 3.2.9, the hydraulic cables we stretched to their maximum in order to be able to give the pressure readings from a reference point where the elevation is know. While it was possible to obtain these pressure values, there may be some error due to losses within the hydraulic cables themselves. An example of such error can be seen in figure 3.2.9, as it shows the cable in a sharp angle around the concrete floor. What this figure does not show is another sharp angle as the cable was passed under an open door and up to the second measuring point. These sharp points will cause the tubing to be partially closed and restrict the flow.

3.3 Excel

With the scope and focus of this project pivoted away from the use of CFD software, work began on the creation of a reusable Excel workbook. The basis of using Microsoft Excel for a platform is that it is a common tool in most, if not all, engineering offices and is readily available. In addition, it is a relatively easy program to use, and one that most people are familiar enough with that they can use it with relatively little training. Within the Excel workbook, all calculations are based upon the quantity of material. This means that the calculated loss will be based upon the input depicting the amount of piping and the total minor loss factor. Once these are in place, the system can be manually operated via alteration of input flow, number of UV disinfection processes in operation, number of intake pumps and number of filters being used.

While the designed Excel workbook is relatively easy to manage and use, it does take time to set up, as treatment plants may be similar, but not identical. Processes used in Norway are typically similar as there is relatively little variation within raw surface water. However, the dimensions and layout of each plant will fluctuate with desired maximum treatment capacity. These similarities are helpful when trying to create a universal spreadsheet, as they create a degree of predictability for each system.

3.3.1 Preparation of the Pressure Loss Workbook

To prepare the workbook for a new project, it is important to start with a file that contains no information from previous projects. This "blank", or zeroed, file should be saved as a go to for new calculations for construction of a new theoretical pressure loss workbook. The blank file should contain all calculations ready for operation, aside from the friction factor, length and diameter of the piping, flow, singular loss factors and unit processes. It should be noted that this workbook also contains coding within Excel's Visual Basic Editor. This code will need some slight modifications with each new project before reliable output can be generated. The process involved for this will be discussed further on as it falls into the preparation procedure.

Diameter	Pipe Length/Section
1	1.000
…	…
1	1.000

Table 3.3.1: The columns of diameter and pipe length/section should only contain values equal to 1.

There are a few things that should be noted about the first appearances of a new zeroed workbook. One important aspect that can be seen in the printout of the spreadsheet in appendix S, and in table 3.3.1, is that it does already contain some values due to the macro generated in visual basic editor. It is incorrect say that these values are due to the macro, but rather that the macro altars cells whose value is dependent on these cells. Because of this, until the final touches have been placed into the workbook, it is important that these cells contain any value, as they can be deleted once the macro has been adjusted. Aside from this, and ensuring there are no residual values or altercations to the file from previous work, the workbook should be ready for use.

3.3.2 Filling in the Workbook

As coagulation and filtration are a common process for surface water sources, the spreadsheet is broken into three sections of pressure loss; raw water, clean bed filtration and clean water. Thus, as can be seen in the first page of appendix S, the pressure loss results are broken into these three categories. Processes such as the static mixer and the UV disinfection are denoted to the raw water and clean water results correspondingly.

The first step for filling in and using the workbook, is to understand the desired layout of the plant. This means that a rough estimate of needed pipes, fittings and accessories should be obtained, along with the planned processes and the resulting pressure losses due to those processes. Each process will have the ability to be represented within its own sheet/tab to calculate the losses due to that specific aspect of the plant. Theses tabs are easy to add, and a tab for calculating clean bed head loss through a filter has already been developed and is ready for the parameters to be

Reference	Section	Diameter	Pipe length/section
Raw Water	Piping from intake pump to larger piping	0.15	1.546
	Pump 1 connecting to pump 2 addition	0.15	1.247
		0.25	0.246
	Pump 2 connecting to pump 3 addition	0.25	0.558

Table 3.3.2: Breakdown of input screen

placed directly into the sheet.

Each process is confined to a single tab that holds the most important information regarding the pressure loss through that section of the plant. To use the Treungen treatment plant as an example, the spreadsheet has three tabs for losses through theses sections. Those tabs relate to the static mixer, the filter and the UV disinfection process. The filtration tab within the zeroed file is already set up for use and only demands that the parameters of the filter media be filled out, in addition to the area each filter and the number of filters. The head loss for the additional processes is not part of the zeroed sheet. They are completely dependent the chosen process and model for each treatment plant. For example, some plants will have larger design flows, and demand larger UV disinfection units, which will have a different head loss equation. Apart from the head loss due to processes, pressure is lost through the internal friction and turbulence of the system. This loss of pressure is calculated through using the length of pipe, diameter and the singular loss coefficient. Table 3.3.2 shows how within the first few columns of the workbook, some of this information is already inserted.

Table 3.3.2 is also a very helpful reference for correctly filing in the correct information to the spreadsheet. These first few columns are very important as they contain important values used for calculating the major loss. The first observation that can be made from this section of the spreadsheet, is that aside from all of the rows belonging to the raw water section of the plant, the piping is divided further into sub sections. These sub sections will be determined and added as seen while filling in the zeroed workbook. The main purpose behind this will become clearer as the rest of the columns are presented. To start with, it is important to divide the sheet into sections of similar pipe diameter and flow. The first section in this figure contains the piping from the intake pump to a larger pipe connecting the three separate intake pumps. This section is the same for each intake pump, thus, if two pumps are operating together the total loss from one of them can be multiplied by two to find the total loss.

The second section depicts the piping from pump number one, to its connection with pump number two. The pumps are named in the order they connect to the main pipe, thus, when pump number one is in operation, the water must pass through the piping connecting the other two sections in addition. For the purposes of this paper, pump number one is the default pump for singe pump operation, as it will provide the larges pressure loss. This section is seen to encompass two lines, as there are two separate diameter pipes involved. This is due to the extension of the 0.15 m pipe to a 0.25 m pipe before the second intake pump is connected to the main piping of the system.

Section	…	Pipe Length/Section	Split Flow? Yes/No	Split into:	Split Flow
Intake pumps	…	1.546	No	1	0.03
Pipe 1 to 2	…	1.247	No	1	0.03
	…	0.246	No	1	0.03

Section	…	Reduced Flow? Yes/No	% Of Total Flow (0-100)	Reduced flow
Intake pumps	…	No	100	0.03
Pipe 1 to 2	…	No	50	0.015
	…	No	50	0.015

Table 3.3.3: Controlling the flow for of water in the system by commanding the flow to split or be reduced allows for accurate measurements of the pressure loss.

The fact that there is more than one intake pump, and that they do not connect to the main piping at the same place creates some minor issues for calculating the pressure loss within Excel. To prevent this, it is possible to tell the workbook if the flow through a section is split between identical sections, such as with the piping from two pumps to the main. It is also possible to say if the flow is reduced, such as the case for the piping in the main line from the first intake pump to the second or third, depending on which one is in operation. Table 3.3.3 shows how this is done within Excel by simply using a yes/no column, and the number of identical sections the flow will be split between, or the percent reduction. By placing a "Yes" in the split flow column, the total flow through that section will be divided by the number of repetition, with the total pressure loss for a single repetition being then multiplied by the number of repetitions.

The second yes/no column is dedicated to parts of the treatment plant were flow is reduced in a pipe, yet not split, as the total flow is divided systematically between multiple sections. The use of the yes/no command allows sections where the flow is not equal to the total flow to produce calculated pressure loss for the reduction of flow. This would incorporate sections such as the piping used to connect separate pumps where the pumps are working in parallel. For the Treungen treatment plant, that would entail the intake pumps and the filter pumps, as well as where the water offshoots into the four filters and the piping used to connect the main line to the two UV disinfection units. The UV units themselves will use the split flow calculation as they are identical, but the piping used to connect them differs, thus requiring use of reduced flow instead. This is because split flow will calculate the pressure loss through a section and then multiply that loss by the number of repetitions. Reduced flow will instead calculate the loss in that particular section, with that particular reduction in flow.

Aside from altercations to the visual basic editor code, adding commands to some cells and linking the results to the result sheet, the only thing left to do is to add the coefficient for singular loss to each section of the system. Within the Zeroed workbook, there is a tab dedicated to determining the singular loss coefficient for different fittings and accessories of the treatment plant. These values can then be used to find the total value of the singular loss coefficient (k) by adding together all that apply to a specific section. Since each section can consist of pipes of different diameters, it is important that the fittings and accessories are matched to the correct diameter, as the singular loss is dependent on the velocity of the water.

3.3.3 Visual Basic Coding and Commands to Simplify the Spreadsheet

As mentioned in section 3.3.2, there are some small altercations the visual basic editor code that are necessary to produce a smooth operating workbook. These altercations will remove the need to place meaningless values within the diameter and length cells of the workbook, as leaving these cells blank without the altercation to the code will trigger Excel to produce the error message seen in figure 3.3.1. The cell that is used in the code will also produce a value of "*#DIV/0*" as the values are placed in the denominator of at least one equation relied on for this calculation. This is prevented within the blank workbook by placing the values of

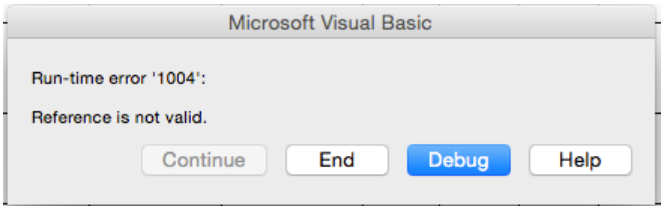

Figure 3.3.1: Error received from Excel for leaving diameter or length blank.

diameter and length as values one.

The actual code within visual basic editor, as can be seen in appendix T, is designed to automatically preform a GoalSeek function for multiple lines of calculations simultaneously. This maintains a workbook that is constantly being updated after each alteration. GoalSeek is a function within Excel that will preform a given number of repetitions in order to find a desired result of an equation by altering cell holding a variable to the equation. The importance of using code for multiple GoalSeek functions is that a typical GoalSeek must be preformed manually by selecting the command and the two cells in question. This means in the case of preforming pressure loss calculations for the entire plant, GoakSeek would need to be manually updated every time a different flow or pipe diameter was tested. Within this workbook, GoalSeek is used specifically to solve the Colebrook equation for the Darcy-Weisbach friction coefficient, equation 2.1.3. By using GoalSeek, the equation can be set equal to 1 and the friction factor altered and tested through iteration to find the correct value.

In order to make sure the code and the workbook preform smoothly together, it is important to remove the code from sections where it is not applicable. For example, the Colebrook equation is not part of the pressure loss through a UV disinfection unit, or a static mixer. These steps in the cleaning process are in line with the both the raw and clean water sections of the treatment plant, and thus it may be desired to add the pressure loss in the same manner. To do so, a section will be denoted with a name such as UV, and the pressure loss will not be dependent on the major or minor loss through the unit, but rather an equation provided by the manufacturer. Without the need for calculating the major and minor losses of the section, the cells denoting the pipe diameter and length will be cleared of any values. This automatically will cause trouble for the GoalSeek function, as the equation it is seeking a solution to is dependent several other parameters, most of which are calculated in some form based on the pipes diameter or length.

```
Private Sub Worksheet_Calculate()

    Application.EnableEvents = False

    Range("U9").GoalSeek Goal:=1, ChangingCell:=Range("V9")
    Range("U10").GoalSeek Goal:=1, ChangingCell:=Range("V10")
    Range("U11").GoalSeek Goal:=1, ChangingCell:=Range("V11")
    Range("U12").GoalSeek Goal:=1, ChangingCell:=Range("V12")
    Range("U13").GoalSeek Goal:=1, ChangingCell:=Range("V13")
```

Figure 3.3.2: Start of the code used in visual basic editor

To avoid complications due to the code of the file and prevent errors such as #DIV/0, which will halt the code, some lines of code will need to be deleted. This is done by simply finding the row number within Excel and deleting the corresponding line of code. As can be seen in figure 3.3.2, each line of code refers to the cells “U” and “V”, and then specifies which row of Excel it will effect. Thus for example, the highlighted line in figure 3.3.2, row 11, will hold the pressure loss equation for a UV unit. Instead of calculating the major and minor losses, the line of code should be deleted. This will prevent a zero value within the cells for diameter and length from stopping the codes ability to function.

```
=IF(M2=1,”No”,”YES”)

=IF(H9=”Yes”,$B$3/J9,$B$3)
```

Figure 3.3.3: Use of the “IF” command to automatically update the workbook based on the number of pumps in operation. Where cell M2 is the numerical number of intake pumps, B3 is the flow and J9=M2.

Aside from the efforts made within visual basic editor, there are a few other equations that can be added to the zeroed spreadsheet to increase its ability to automatically update due to simple alterations. Such alterations can include reducing the number of filters in use from

four to three, or deciding to use two intake pumps instead of one.

One of the most commonly used additional commands within the workbook is the "IF" command. The "IF" command functions through use of a logic test. If the test proves true, then one value or equation will be carried out, but it if it is false, then a second value or equation will be used instead. In the case of this workbook, the "IF" command is heavily used for producing alternate results based on the number of pumps or filters in use. An example of its use would be to dictate a yes/no response within the "Split Flow, Yes/No" column, followed by its use again in the "Split Flow" column. The actual text placed within these two cells can be seen in figure 3.3.3. Using the "IF" command within the "Reduced Flow" column can do the same. These commands are also placed within the "Clean Water" section of the workbook and are used to control the flow for different filter scenarios, such as having one filter taken out of operation to be backwashed. This provides an easy way to test the pressure losses through a system for different flows and operating conditions.

Once the quantities of pipe are input and matched with the correct total singular loss value, results should begin to be produced. The addition of the "IF" commands are not necessary, as the workbook can be manually driven for altering conditions. These results should be present on the first tab of the workbook, and it should be possible to alter the flow from the same tab. This gives the ability to test how the system will handle increases in flow, and if the dimensions are as desired.

4 RESULTS

Pressure losses through the Treungen drinking water treatment plant were both physically measured, and theoretically calculated. These results will be presented below with in depth discussion and analysis in section 5.

It is important to understand while reviewing the results, that the pressure for the theoretical results has been calculated in meters of water. Meters were chosen for simplicity purposes, as length of piping is an important aspect of the total pressure loss through the system. This is not the case however for the pressure readings taken at the treatment plant. Here the manometer provided pressure readings in Bars. Since the readings were given in bars, they had to be converted to meters both for calculating the water surface elevation (WSE), and for comparing measured losses with those obtained through theoretical evaluation.

4.1 Physical Measurements

As previously stated, the physical pressure readings were taken in bars of pressure. These were then converted to meters of pressure as to simplify the evaluation process. This was accomplished by using the correlation of 1 bar of pressure is equal to 10.1972 meters of water (mH_2O) [8].

The importance of converting the measurement values to meters is that the pressure readings in meters, along with the elevation of the digital manometer during testing, will give the water surface elevation of the water at the testing point. This is particularly important as the pressure readings are often as the water surface elevations of both the filters and the clean water storage tank. By knowing the water surface elevation at the testing point, and the elevation of the water surface in these units, the pressure loss between them may be easily calculated. Thus the reference elevations, the elevations used for measuring each test, have been determined and are referenced for each measurement.

4.1.1 Clean Water Test: Pre and Post Filter Pump

As discussed in section 3.2.2, tests were preformed to calculate the pressure loss through a “dirty” filter as it ends its production cycle as well as after being backwashed clean. In addition, pressure losses were calculated after the filter was backwashed and during the filters

Test	Filter Water Elevation	Loss in Filter	Storage Water Elevation	Loss Pump to Storage
Before Backwash				
Test #1	251.48	1.0636	250.68	1.908
Test #2	251.34	1.7699	251.1	1.835
Ripening				
Test #1	251.58	0.5926	No water was transported to the storage tank under ripening phases.	
Test #2	251.53	0.6344		
Test #3	251.52	0.6549		
After Ripening				
Test #1	251.56	0.3278	280.71	1.7254
Test #2	251.39	0.6881	251.2	1.7453

Table 4.1.1: Pressure losses from filter and filter to the storage tank.

ripening period. This provided the difference in pressure loss for a clean and used filter to demonstrate how over time, a filters head loss will increase.

Two tests were preformed to calculate the difference between a dirty filter, and a clean one. The first was preformed as the filter ended its production cycle, and the second once it began a new cycle. The pressure losses can be seen in the table 4.1.1. The table is a shortened version displaying only the exact values for the pressure loss throughout the filter tests. The entirety of the table can be found in appendix G, providing all parameters of the tests. The most important unseen parameter to make note of, is the flow value for each test, as that will dictate the waters velocity through the filter. For both the pre and post back wash tests, test #1 was conducted at approximately 3 liters per second and test #2 at approximately 6 liters per second. Each test within the ripening phase of the filter cleaning process was approximately 6 liters per second, as is protocol for the backwash procedure. The generated values show how at a flow rate of 3 liters per second, a dirty filter will have a pressure drop of over one meter, while clean filter will have a loss of only just over 30 centimeters. Even at a higher velocity of 6 liters per second, the values observed are 1,78 meters and 0.69 meters respectively, a full meter less of pressure loss.

The pressure values obtained from the filter test on the pressure side of the filter pump, combined with the water surface elevation of the clean water storage tank, can also be used to calculate the pressure losses from the filter pump to the storage tank. These values can be seen in table 4.1.1, and are respectively in the neighborhood of 1.7 to 1.9 meters of pressure loss.

4.1.2 Clean Water: Post Filter Check Valve

Section 2.2.3 discussed the procedure for measuring the pressure loss across a check valve and a 90-degree elbow bend following the filter pump exiting filter number four. The type of check valve used in this treatment plant is referred to as a diaphragm valve. An overview of the valves parameters can be evaluated in appendix H.

P_2 (m)	Check Valve Loss (m)	Storage Tank Level (m)	Storage Tank WSE	P_2 WSE (m)	Loss P2 to Storage
4.9864	1.2134	4.68	250.65	250.936	0.28643
5.0986	1.4581	4.77	250.74	251.049	0.3086
5.0782	1.4581	4.8	250.77	251.028	0.2582
5.2107	1.7029	5.25	251.22	251.161	-0.05923

Table 4.1.2: Calculated pressure losses from flows in descending order, 1.48, 2.97, 2.97 and 5.96 l/s

A short synopsis of the procedure involves attaching the digital manometer to a testing point on the pressure side of the pump, and a spigot used for collecting water samples almost immediately following the check valve. The pressure was then measured a total of four times for a series of three different quantities of water. Table 4.1.2 shows the calculated pressure losses for both within the check valve, and from the second measuring point on the way to the water storage tank, with the entirety of the table being available in appendix I.

Results for the pressure loss due to the post filter pumps check valve seemed reasonable when only viewing the physically measured values, with a range of 1.213 meters of loss at approximately 1.5 l/s of flow, and 1.7 meters of loss for approximately 6 liters per second of flow. This proved to be different once compared with the theoretical values.

The pressure readings following the elbow bend and the water surface elevation of the clean water storage tank were also analyzed. These two pressure values will provide the total pressure loss between these two points by subtracting the final pressure from the original pressure. The values obtained proved to be unreliable, as the readings present a pressure gain of 5.9 cm for the 5.96 l/s test. This is a large deviation from the average pressure loss, considering the previous three tests have losses of between 25 and 30 centimeters. This is particularly strange considering that the pressure loss through the check valve increases as flow increases, from 1.2 meters to 1.7 meters of loss, while the loss between the second measuring point and the storage tank appears to decline. This is strange as an increase in flow will demand an increase in velocity through the piping. Thus, as seen in the Darcy-Weisbach major loss equation, equation 2.1.2, an increased in velocity should yield a higher loss.

4.1.3 Clean Water: Post Filter Pipe Combination

The final clean water test preformed was to measure the pressure in the system immediately following the combination of the four filter pumps and compare it to the water surface elevation in the storage tank. The pressure measurements obtained from the two points should theoretically produce the pressure loss. However, the pressure losses calculated proved to be pressure gains for two of the three tests.

Elevation tank water surface	Elevation of pre UV	Pressure Loss
251.67	251.395	-0.2747
251.67	251.66	-0.00957
251.67	251.599	0.01925

Table 4.1.3: Pressure loss results for measured values post filter combination for flows of 6 l/s, 3 l/s and 1.5 l/s per filter pump

The three tests were preformed in reverse order from the other filter tests. They started with a test of 6 l/s, followed by 3 l/s and finally 1.5 l/s. The only one of the three tests to produce a pressure loss was the final test of 1.5 l/s. This test can be seen in table 4.1.3 as only producing a total loss of only 1.9 cm for the entirety of this section. The measured losses for the other two flows proved to result in pressure gains. The gain for the 3 l/s flow rate was not a large gain, as resulting in a pressure difference of only 9 mm. The gain associated with the 6 l/s flow does not share this similarity, as the pressure gain is a very noteworthy 27 cm. All measured values are available in appendix J, with an additional outtake of the measured values presented in table 4.1.4.

Flow per filter	Flow Total	Pressure (bar)	Water Storage Level	Pressure (m)
5.95	23.8	0.534	5.7	5.4453
3.02	12.08	0.56	5.7	5.7104
1.55	6.2	0.556	5.61	5.6492

Table 4.1.4: Pressure readings and water depth of the clean water storage tank.

The values presented in table 4.1.4 show actual pressure readings produced from the test, ranging from 0.534 bars at 6 l/s per filter to 0.554 bars at 1.5 l/s per filter. This translates to a range of 5.44 and 5.65 meters of pressure. These values obtained for the pressure leaving the parallel pumps follow a trend that is consistent with what would be expected from a pumping station. That is to say that, as the flow increases, the pressure will decrease. Thus the pressure produced from the pumps for 6 l/s per pump should be less than the pressure for 1.5 l/s per pump, as can be confirmed with the results in table 4.1.4.

4.1.4 Raw Water Test: Pre and Post Intake Pump

The first of the four raw water tests preformed at the treatment plant was to measure the pressure both before and after an intake pump while no other pumps were in operation. These tests could then be used to calculate the pressure loss in the system from the intake to the pump, and from the pump to the filter. The entirety of the excel sheet used for preforming these calculations can be seen in appendix L.

To start off, the pumping station is located below the water surface level of the drinking water source. Thus, the water surface level of Nisser can be used as an initial pressure value, and the pre-pump measured value can be used as an end pressure. The datum for calculating the lakes pressure is located at 243.815 meters above sea level, with an additional 2.5 meters of water above this datum. Table 4.1.5 shows the calculated values for these two sections of loss for flows of 22 and 37 liters per second.

Flow (l/s)	Pressure Loss to filter	Real Pressure Loss	Pressure Loss from intake
22	1.625	1.6211	1.2434
37	0.0445	0.0355	2.5282
37 (Gate valve 66% closed)	0.0139		2.4263
0	-6.1146		0.5092

Table 4.1.5: Pressure loss calculations for loss within intake, and from intake pump to the filters.

The results are split into three separate sections in addition to two separate sections of loss. The first section is the loss to the filter as calculated by using the filters water depth as given by the plants operating system. The second is the true pressure loss, as the operating system maxes out the depth of water at the height of overflow, meaning that the increase in the water surface above this depth is drained into the spillway and not taken into consideration. To counteract this, the depth of the overflow was measured. The third and last column is the calculated pressure loss from the intake to the pumping station.

The pressure losses to the filter were measures four times for flows of 22, 37, 37 (with gate valve 66% closed) and 0 l/s. The largest pressure loss for water traveling from the pump to the filter occurred at a flow rate of 22 l/s and consisted of a total of 1.625 meters of loss, while the two other tests of 37 l/s produced losses of 4.4 and 1.4 cm. The measured pressure difference between the pump and the filter for a flow of zero also provided a pressure gain of over 6 meters. This is due to the diaphragm valve closing and preventing water from flowing backwards, thus the total pressure at the pressure side of the pump, 245.78 m, is very similar, as should be, to that of the low-pressure side, 245.8 m.

4.1.5 Raw Water: Pre Pump Filter Pressure Loss

Flow l/s	P_1 (bar)	P_2 (bar)	P_1 (m)	P_2 (m)	P Loss
0	0.282	0.282	2.876	2.876	0
22	0.248	0.215	2.529	2.192	0.337
37	0.188	0.1	1.917	1.019	0.897

Table 4.1.6: Pressure loss across the pre intake pump filter.

As previously discussed, prior to each intake pump, there is a filter to prevent any debris from entering and damaging the intake pumps. A diagram of the filter used, an Easton Filtration Model 72 Simplex Strainer, can be found in appendix M. Pressure measurements were taken immediately before and after the filter in an attempt to only record the pressure lost through this single process. The results can

be seen in figure 4.1.6.

The filter was then tested for three scenarios, no flow, 22 l/s and 37 l/s. Of these three tests, and as should be expected, the pressure loss was the greatest at the highest flow rate. A loss of 89.7 cm was experience for 37 l/s, with a loss of 33.7 cm for 22 l/s and no measured loss for static conditions. As with the other raw water testing, the pumps were manually overridden to function at the pre determined frequencies of 40 and 50 Hz. The pressure lost within the intake pipes was also noted, with a small loss of around 4 cm for 22 l/s and a larger loss of 10 cm at 37 l/s.

4.1.6 Raw Water: Pre Pump Post Pump Collection Pipe

A final test was run in an attempt to calculate the entire pressure loss through the system from the intake pumping station to the filters. This test was again preformed for the three flow rates of 0, 22 and 37 l/s. The test resulted in pressure losses for both the water intake location to the intake pump, as well as from after the pump pipe combination to the filter.

Flow l/s	P_1 (m)	P_2 (m)	WSE Post Pump	WSE Filter	Loss to Filter	Loss to Intake
0	2.692	8.973	251.89	251.88	0.013	0.45
22.25	2.11	9.0857	252.01	251.88	0.126	1.03
37.13	0.897	9.2284	252.15	251.88	0.268	2.25

Table 4.1.7: Pressure values and the resulting calculated losses obtained from two measuring points. 1) Pre intake pump. 2) Post pump combination

The results obtained from this test were probably some of the best results for all of the raw water pressure tests. The loss to the filter was an insignificant 1.3 cm at a flow rate of 0 l/s, and increased as anticipated from the 22 l/s test of 12.6 cm to 26.7 cm for 37 l/s. The pressure entering the pump decreased to a low of 0.897 meters for the high flow testing, which resulted in a total loss of 2.25 meters from the intake.

4.1.7 Raw Water: Static Mixer

The final physical pressure readings obtained for the raw water were those used to calculate the pressure loss across the plants static mixer. These values were calculated by measuring the pressure in the pipe a few meters before the static mixer and almost immediately following it. The tests were performed at the usual 40 Hz and 50 Hz frequency for a single pump. In addition, an extreme condition of two pumps in parallel running each at 50 Hz was tested. This produced a flow of 68.07 l/s, a flow much larger than will ever be used for water production within the plant.

Flow l/s	P_1 (m)	P_2 (m)	Pressure Loss (m)
0	2.947	2.886	0.0611832
22	3.059	2.937	0.1224
37	3.263	3.069	0.1937
68.07	3.773	3.3651	0.4078

Table 4.1.8: Pressure loss through the static mixer and limited piping.

4.2 Theoretical Values Obtained Through Excel

The workbook used in excel, has been created with three main categories of focus for the Treungen treatment plant; raw water, filtration and clean water. Pressure loss has thus been calculated for these sections, including any other processes within those sections. For the case of the Treungen drinking water treatment plant, that would mean the raw water section would contain a static mixer and the clean water would include the UV disinfection unit.

4.2.1 Raw Water Theoretical Pressure Loss

Pressure losses within the raw water portion of the treatment plant consists of all losses from when the water leaves the intake pumps, to when it enters the filter. This process includes the distribution of water as it enters four separate filters, as well as the collection of three intake pumps where any two may be operating in parallel.

Reference	Section	Total Major loss	Total Minor loss	Unit preocess	Total Major+Minor Loss
Raw Water	Piping from intake pump to larger piping: Split=number of pumps in operation	0,024957712	1,73456815	0	1,759525865
	Pump 1 connection to pump 2 addition	0,02012147	0,10282453	0	0,122946004
		0,00033228	0	0	0,00033228
	Pump 2 connection to pump 3 addition	0,000637435	0	0	0,000637435
	Pump 3 connection to Static Mixer PE Piping	0,007821882	0,02665212	0	0,034474001
	PE Piping pre Static Mixer	0,001712387	0,03312478	0	0,034837163
	Static Mixer	0	0	0,1334453	0,133445343
	PE Piping Post Static mixer	0,000912205	0,01599127	0	0,016903477
	Steel piping to branch to filter 1	0,003051786	0	0	0,003051786
	Piping to each filter	0,011225351	0,15229782	0	0,163523174
	Filter branch 1 to branch 2	0,000228126	0,00021417	0	0,000442294
		0,003004903	0	0	0,003004903
	Filter branch 2 to 3	0,00200742	0	0	0,00200742
	Filter branch 3 to 4	0,000143	5,8097E-05	0	0,000200723
		0,004540612	0,01142234	0	0,015962949
				Sum=	2,291294818

Figure 4.2.1: Pressure loss for raw water portion of the Treungen treatment plant at a flow rate of 30 l/s, equal to 2.29 meters (Appendix U).

The losses within the raw water section for a flow of 30 l/s can be viewed in table 4.2.1, with the entirety of the table attached in appendix U. As can be seen by viewing the theoretical losses, the total loss was a staggering 2.89 meters. The largest portion of loss can clearly be seen occurring within the first few meters of pipe following the intake pump. This loss shows a theoretical loss of 1.7505 meters, which is equal to 60.68% of the total loss before entering the filer.

The second largest pressure loss within the raw water is due to the static mixer. This accounts for a pressure drop of 0.834 meters, or approximately 28.76% of the total pressure drop. The remainder of the pressure lost within the system, the final 0.3059 meters, is due to the large amount of piping used to transport and distribute the water to the filtration system. This is a very small percentage of the total loss, especially considering it encompasses the majority of the piping.

4.2.2 Theoretical Pressure Loss Due To Filtration

The second stage of pressure loss within the treatment process is that which occurs within the filter. This loss is not constant with time. As the operational time of the filter increases, a cake will form at the surface of the filter bed due to deposited particles [15]. This cake will increase the effectiveness of the filter in addition to increasing the pressure loss through the filter.

Head Loss (Meters)	
Filtrite	0.00525816
Sand	0.141983347
Marble	0.726267266
Total Loss	0.873508773

Table 4.2.2: Theoretical pressure loss through a clean filter.

The filters used at the Treungen drinking water treatment plant consist of three layers of media; Filtralite, sand and crushed marble. They have respective depths of 0.6 m, 0.4 m and 2 m. The first two layers are purely used as filter media, while the crushed marble aslo functions as a pH adjuster. The Marble will also gradually be depleted as the fiction between itself slowly degrades the marble and miniscule particles escape along with the clean water. The theoretical values calculated are for a filter that has not lost any filter media, in addition to being considered clean and having just completed the ripening process post backwashing. These conditions will provide the pressure loss for a clean bed. The values obtained through the theoretical calculations can be seen in table 4.2.2. They show that of the total 87 cm of pressure loss, the majority at just over 83% of the total loss was lost within the final layer of filter. This layer of crushed marble accounted for 72 cm of the total loss, a staggering amount considering the first layer of Filtralite only accounts for a 5 mm pressure loss. The final layer of sand is responsible for the remaining 14.1 cm of loss. In total, a clean filter will be responsible for a loss of 87 cm when first placed back into operation, however that value will increase with time.

4.2.3 Clean Water Theoretical Pressure Loss

The theoretical pressure loss for the clean water section of the treatment plant produced values that mimic the raw water portion of the treatment plant. This section of the plant includes the combination of the exiting flow from all four filters, in addition to transporting water through the UV disinfection unit and transporting the water to the clean water storage tank.

Reference	Section	Total Major loss	Total Minor loss	Unit Process	Total Major+Minor Loss
Clean Water	Filter pump to collection	0,032206386	2,33503446	0	2,367240849
		0,07266647	0,22309251	0	0,295758985
	Filter 4 to 3	0,002494155	0,02976041	0	0,032254567
		0,000577584	0	0	0,000577584
	Filter 3 to 2	0,00215986	0	0	0,00215986
	Filter 2 to 1	0,00448909	0	0	0,00448909
	To UV Splt	0,028812058	0,10596894	0	0,134781002
	Straight UV	0,004859796	0,03256077	0	0,037420562
		0,000492746	0,01009884	0	0,010591584
	UV	0	0	0	0,01
	Side UV	0,006467052	0,02884256	0	0,03530961
		0,00079011	0,0156073	0	0,016397405
	UV	0	0	0	0
	To Storage	0,000840135	0,01652537	0	0,017365507
				Sum	2,964346604

Table 4.2.3: Pressure losses within clean water portion of treatment plant 30 l/s, 2.96 meters (Appendix W).

The results shown in figure 4.2.3 are those in which all four filters are in operation, along with only one of the UV disinfection units. Under these operating conditions, the

clean water piping has a theoretical pressure loss 2.96 meters. The largest loss would occur after each of the four pumps as the water passing through a check valve. The theoretical results show a total pressure loss of 2.36 meters from all four of the filters.

The remainder of the pressure losses were calculated to be relatively small, with the second larges loss occurring where the piping splits to supply water to both UV units if desired. The UV units themselves produce very little loss. They are shown here as only producing one centimeter of loss for a flow of 30 l/s. This is very low, but it matches the companies main selling point of a UV disinfection unit that is not only effective, but adds very little pressure loss to the system.

5 DISCUSSION

5.1 Observed Pressure Losses

The observed pressure losses within the treatment plant leave much to be interpreted. Some of the pressure losses observed were shining examples of how physical measurements can match a theoretical value in the real world. While other measurements create more questions than they solve. This will be discussed in the following paragraphs and compared with the theoretical values in section 5.3.

5.1.1 Clean Water Test: Pre and Post Filter Pump

As discussed in section 4.1.1, the pressure losses through a clean filter were drastically less after the filter was backwashed and the ripening period was complete. For the two flow rates used for testing, 3 and 6 liters per second, the pressure loss through the filter dropped by 69% and 61% respectfully [table 5.1.1].

While this decrease in pressure loss through the filter is significant, it should be noted that the filter in use is capable of treating a much larger volume of water than was treated before these tests were preformed. Filter number four at the Treungen treatment plant, the filter used for these tests, had cleaned 194 cubic meters of water before being backwashed. The filters themselves are capable of much more, and the system is set to initiate the backwash procedure if the filter has treated 450 cubic meters before reaching the traditional time parameter of 75 hours.

Pressure Change pre/post Backwashing Process			
Flow (l/s)	Pre (m)	Post (m)	Percent Change
3	1.0636264	0.3278504	69.17616938
6	1.769994	0.6881048	61.12389082

Table 5.1.1: Percentage decrease of pressure lost in filter.

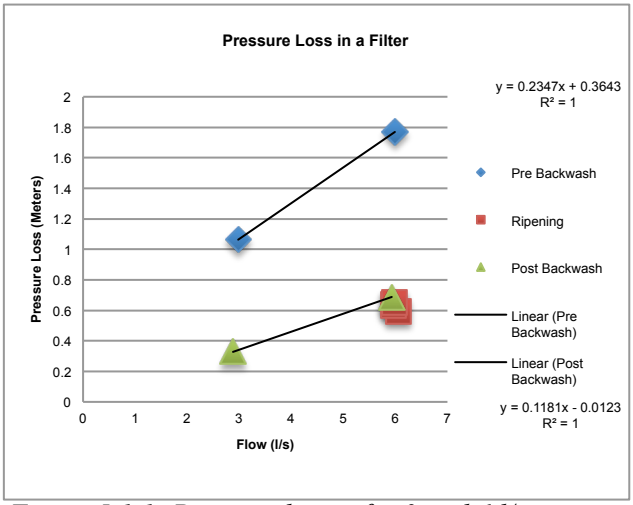

Figure 5.1.1: Pressure losses for 3 and 6 l/s at pre and post backwashing conditions (Appendix G).

The decrease in pressure lost after the filter has been cleaned is impressive. A reduction of pressure loss of over 60% is a very large alteration. As percent values can be impressive, but difficult to grasp, the graph in figure 5.1.1 was created. This graph shows the pressure losses for 3 and 6 liters per second prior to backwashing in the blue diamonds. The green triangles specify the post cleaning pressure readings, and the red squares were the observed losses under the ripening process, all occurring at flow rate of 6 liters per second. This figure gives a nice visual representation of the decreased pressure drop through the cleaned filter media. It also shows

how after backwashing the filter, the ripening phase starts at a lower pressure loss, and over the course of the three tests taken over 40 minutes, gradually increases. This gradual increase over time is to be expected as coagulated particles help to block the pore openings working to increase the filters effectives. The process of ripening process is as it increases the filters ability to preform.

The final results obtained from these tests were used to indicate the pressure losses experienced between the pressure side of the filter pump, and the clean water storage. These values proved to be peculiar as the pressure lost between these two points for a flow of 3 liters per second, was calculated to be almost 20 centimeters more prior to backwashing the filter as to after. Even the higher velocity of 6 liters per second proved to have a lower pressure loss than at 3 liters per second, and again it was lower by almost 10 centimeters after backwashing. These values can be seen in both the abbreviated table in figure 4.1.1 and the complete table in appendix G.

Parameters for these two tests were the same, meaning the operational conditions should be very similar. Starting with the 3 liters per second tests, the flows for the pre/post cleansing were 2.98 and 2.88 l/s respectfully with 6.638 and 6.985 meters of pressure. The storage tanks water was also very similar at 4.71 and 4.74 meters deep. These values appear to be very similar, yet results in a pressure loss of almost 20 centimeters more. This is very surprising, as at a glance, these values seem to share more similarities than the values obtained from the 6 liters per second tests. Those values show 5.99 and 5.93 l/s, 6.985 and 6.995 meters of pressure and a storage tank depth of 5.13 and 5.23 meters.

A potential reason for the inconsistency of pressure loss is that the clean water storage tank is also attached to the drinking water network. As the pumps supplying the drinking water network were not being monitored during the clean water testing, they could have potentially been supplying water to the drinking water network, and preventing the water surface elevation to reach the true height of its pressure head. This theory holds ground as the water level in the clean water tank was reduced back to 4.74 meters from 5.13 meters for the start of the second 3 l/s pressure tests. This can be partially explained by the use of the clean water for backwashing the filter, but may also be due to the networks demand.

5.1.2 Clean Water: Post Filter Check Valve

The results from the post filter check valve illustrated in table 4.1.2 of section 4.1.2, shows the large measured loss through the post filter check valve and a comparison of the measured values to the theoretical values will be discussed in section 5.3. As can be observed from the obtained values in table 4.1.2, the values are all very large for a singular loss. While they increase with flow, they do not increase in the manner one would expect as through a singular loss. Figure 5.1.2 below shows the pressure losses plotted on a

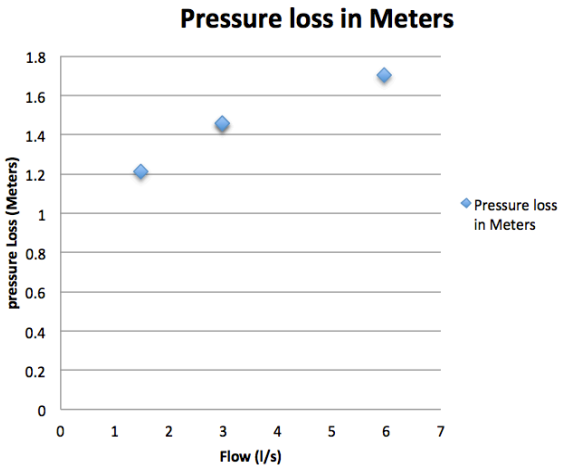

Figure 5.1.2: Pressure loss vs. flow within a check valve (Appendix I).

graph of pressure loss against flow. As can be seen in the graph, the observed pressure losses follow an unexpected trend. The change in pressure loss from both 1.5 l/s to 3 l/s, and 3 l/s to 6 l/s, are approximately 25 cm each. A trend such as this one would provide a negative value on its second derivation, indicating a deceleration of the addition of pressure loss while increasing the velocity. A negative second derivation for a singular loss is a clear sign that the data collected is not completely reliable for the presumed conditions.

There are a few explanations for why the data collected would not be consistent with the expected results. One of the reasons could be that the pressure gauge may not have been calibrated properly. However, there are more logical explanations for these skewed results. The most plausible being the check valve not operating as anticipated and remaining partially closed. If this is the case, it is not strange that the pressure losses for the lower velocities would give such high losses, which only moderately increase with a higher velocity.

Aside from the unpredicted large pressure loss through the check valve, the pressure readings taken from this test continued to produce unforeseen results for the pressure loss from the second measurement point, to the clean water storage tank. As previously presented, the pressure loss of the 1.5, 3, and 6 l/s tests produces losses of 28.6, 25.8 (and 30.8) and -5.9 cm respectfully. These values are illogical as aside from one test preformed for a 3 l/s flow rate giving a loss of 30.8 cm, the pressure loss decreases as the flow increases, and a pressure gain of 5.9 cm is impossible without the addition of pressure via a pumping station. This is an impossible trend to evaluate, as the Darcy-Weisbach equations for major and minor losses for a section of piping, only fluctuates due to the velocity of the water, as all other parameters are constant for a given section of piping. Thus an increase in flow, which automatically results in an increase of velocity in a constant set of piping, will produce a larger pressure loss. As the measured losses produce a contradicting trend to that of the theoretical, it can be inferred with a large degree of confidence that the results are due to a gross error in the measurements. A commonality that is shared with the measured results from the post filter collection pipe test. The most likely result is an error in the reference elevation, but that would not account for the decrease in pressure loss as flow is increased.

5.1.3 Clean Water: Post Filter Pipe Combination

The results obtained through the singe testing point following the combination of all four filters into a single pipe provided results that were questionable at best. This testing point was chosen as it provides a point of reference for the total pressure loss in the piping following the filter pumps, to its eventual storage in the clean water tank. This pressure loss will be a result of the internal friction of the pipes, the singular losses as it bends its way through the structure and the loss through the UV disinfection stage. While these pressure losses should not be large, they should be existent. This contradicts the values obtained and presented in the results in section 4.1.3.

Flow (l/s)	Pressure Loss (m)
6	-0.274695
3	-0.009568
1.5	0.019248

Table 5.1.1: Pressure losses/gains obtained through physical measuring.

As can be seen in appendix K, the UV disinfection process produces very little pressure loss. However, in addition to the known pressure loss through the UV disinfection unit as provided by the supplier, there should be without exception a pressure loss between the test point and the clean water storage tank. This notion that there

should always be a pressure loss as water flows through a system is not a topic open for discussion, but rather a known fact. The only issue open for discussion is total loss and why it is not iterated in the measured results.

This section of the treatment plant should produce loss, yet as table 5.1.1 shows, there was in fact a gain for two of the three tests, and a minimalized loss for the third. Aside from the only measured loss being relatively small, it should be noted that the "gain" in pressure for the first test at 6 l/s is a relatively large value. This gain of almost 27.5 cm is a very large deviation from expected results and solidly points to another issue giving way to faulty results. What that issue could be is an entirely different inquiry.

$$Hl_{TOT} = Hl_{Major} + Hl_{Minor}$$

$$Hl_{TOT} = f\frac{L}{D}\frac{v^2}{2g} + k\frac{v^2}{2g}$$

$$Hl_{TOT}(v = 1\,{}^{m}/_{s}) = 0.15\frac{20m}{0.2m}\frac{(1\,{}^{m}/_{s})^2}{2(9.81\,{}^{m}/_{s^2})} + 3\frac{(1\,{}^{m}/_{s})^2}{2(9.81\,{}^{m}/_{s^2})}$$

$$Hl_{TOT}(v = 1\,{}^{m}/_{s}) = 0.917meters$$

$$Hl_{TOT}(v = 2\,{}^{m}/_{s}) = 0.15\frac{20m}{0.2m}\frac{(2\,{}^{m}/_{s})^2}{2(9.81\,{}^{m}/_{s^2})} + 3\frac{(2\,{}^{m}/_{s})^2}{2(9.81\,{}^{m}/_{s^2})}$$

$$Hl_{TOT}(v = 2\,{}^{m}/_{s}) = 3.6697meters$$

$$Loss\ increase\ factor = \frac{3.6697m}{0.917m} = 4$$

Figure 5.1.3: Using Equations 2.1.2 and 2.1.4, it can be seen that by doubling the velocity of water through a pipe, the total loss will be quadrupled.

To demonstrate how the pressure losses should follow a completely different trend, equations 2.1.2 and 2.1.4 will be used. These equations are for calculating the major and minor losses respectfully. In order to expand on how the pressure loss should increase exponentially as the water velocity increases, these two equations will be use in figure 5.1.3. For this example, the variables for length, diameter and friction coefficient were all randomly chosen to show how velocity affects the total pressure loss. In these equations, the velocity is doubled to demonstrate the doubling of flow, as the increase in flow will be proportional to the increase in velocity. Hence denoting a 50 percent increase in flow will yield a 50 percent increase in velocity. In the calculations preformed in figure 5.1.3, flow was removed from the equation for simplification, and replaced with velocity values of 1 m/s and 2 m/s to indicate a doubling of velocity, and thus representing a doubling of flow. This is of course assuming the coefficient of friction remains constant, as it should fluctuate due to the Reynolds number. However, the impact of the altered friction coefficient will be minimal by comparison to the impact a change in velocity will have on the overall loss.

A doubling of velocity, and subsequently flow, shows how the pressure loss is increased by a factor of four. As can be expected given the velocity is squared in both the major and minor loss equations. This is a very important theory to understand, as through the tests, the flow value is doubled from 1.5 l/s per filter to 3 l/s per filter, and then again to 6 l/s, but the pressure losses do not correspond. This should thus result in the

Ground Floor Elevation	Storage tank WSE	Elevation of pre UV	Pressure Loss
250	251.67	255.445	3.7753
250	251.67	255.71	4.0403
250	251.58	255.659	4.0692

Table 5.1.2: Increased elevation of pressure test gives actual pressure losses, but still gives the larges loss for the lowest flow rate.

doubling and quadrupling of the total pressure loss, not positive pressure gain as seen in the results.

Manipulating the input values can make a second, and ultimately a more important assertion of the obtained pressure loss results. By altering the reference elevation of the measurement gauge, it is possible to produced results in which pressure loss can be observed. This however, as can be seen in table 5.1.2, proves that there is a flaw. As previously displayed, a doubling of flow rate should yield a doubling of the total major and minor losses. Within this section of the treatment plant, that means that the total pressure loss will be equal to the combination of these two factors, plus the loss through the UV disinfection process. Nevertheless, the measured values show that the pressure loss is largest for the lowest of the three velocities, and smallest for the highest. This is seen through the addition of 4.05 meters of artificial head by changing the reference point's elevation. This still provides results that are untrustworthy, and should be further invested gated through the use of the corresponding theoretical values.

5.1.4 Raw Water Test: Pre and Post Intake Pump

The test of the pre and post raw water intake pump resulted in some very interesting values that say a lot about how the hydraulics of the treatment plant preform under operating conditions. The first observation to be made after the pressure loss calculations were completed was the unusually large pressure loss for the first test of 22 l/s. This is particularly interesting since there is such a large deviation from this pressure loss and the considerably small losses from the two 37 l/s tests.

The most logical explanation for the exceptionally large pressure loss is most likely due to the diaphragm valve placed after the intake pump. This valve is used to prevent water flowing backwards from the filter, through the pump and returning to the lake. A diaphragm valve will open as the water flow increases implying that a low water flow will not produce a complete opening of the valve. This is important to know as a diaphragm valve that is completely open has a loss factor of 2.3, while a diaphragm valve that is only a quarter open, will have a theoretical factor of 21 [10]. That is almost ten times the friction loss from a valve simply failing to open fully, whether by flaw of lack of flow, this is a very large loss from a singe until. This is most likely the reasoning behind why there exists such a large pressure loss for the first of the three tests.

Figure 5.1.4: Overflow in filter, photo taken under backwashing.

The next things to note is that the pressure loss for the two tests at 37 l/s are relatively small. Even when the gate valve is closed approximately 66% of the way, the pressure drop decreases instead of increasing as expected. This is more difficult to explain, as the closure of the gate valve should increase the theoretical loss factor from 0.17 to 4.5 [10], as can be seen in appendix D along with other singular loss coefficients. This increase in the loss coefficient should have caused a larger pressure loss for an equal flow, but that does not appear to be the case, as the measured pressure loss appears to decline. It should also be noted that the water should be passing through the static mixer as the coagulant is

added where the water then proceeds to the filters. The static mixer itself should provide losses larger than those presented in the entirety of the system from the pump to the filter. This shows that there is a flaw either in the rough loss estimate of the static mixer, or the dimensions of the one installed.

The biggest issue with calculating and determining the true pressure loss for the first two tests was the true water surface elevation of the filters, as water was entering faster than it could be filtered. Thus, the excess water flowed into the overflow canal to be sent either to the sewage treatment plant or back in line with the outlet from Nisser. The additional depth of the water is an unknown factor, as the software used for measuring the filter waters depth has an upper display limit which is reached at the point of overflow.

The depth of water at the point of overflow was measured as it can provide an accurate true water surface elevation to the filter water. This calculation is difficult, as by the time the water is exiting the overflow to the spillway, the water surface elevation has decrease from the total water surface elevation. This can be seen in figure 5.1.5, and is know as the drawdown.

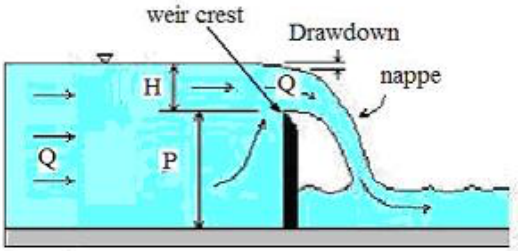

Figure 5.1.5: Parameters of sharp crest overflow [12]

To calculate the true water surface elevation of the filter, the overflow must first be characterized. The overflow ducts used at the Treungen treatment plan span the width of the entire filter. As the side constraints are the same for the water surface and the spillway, the overflow can be considered a rectangular weir without constraints. This means that the height of water above point of overflow can be calculated through use of equation 5.1.1 and the total flow being pumped to/from the filters. This can be easily accomplished as electromagnetic water meters are installed prior to water entering the filters, in addition to after each filter pump. Thus, the flow of water exiting through the spillway should be as easy to calculate as subtracting the flow exiting the four filters from the flow entering the filters. This, in addition to the known width of overflow, can be easily placed into equation 5.1.1 as to determine the true water surface elevation within the filters.

$$Q = 3.33 * L * H^{3/2}$$

$$H = \frac{Q}{3.33 * L}^{2/3}$$

Equation 5.1.1: Flow over a sharp crest overflow [11]

5.1.5 Raw Water: Pre Pump Filter Pressure Loss

The pressure tests preformed for the pre intake pump filter provided incite into what may very well be the largest singular loss prior to the intake pump. As was recorded in section 4.1.4, the calculated presser loss leading to the intake pump was approximately 1.2 meters for a flow rate of 22 l/s and an entire 2.5 meters for 37 l/s. With the losses within the filter accounting for 33.7 cm and 89.7 cm respectively, they account for 28-35% of the total loss. This is a large percentage, as the piping itself is well over 100 meters long with the major losses here

Loss in Meters	Loss in kPa
0.337	3.304
0.897	8.796

Table 5.1.3: Meters to kPa of pressure loss

accounting for the majority of the total loss. While the losses may seem large, they are perfectly within reason, and are supported by the values of expected pressure loss provided by their manufacturer, Eaton. These values can be seen in appendix M and follow the line for a 2.5 inch filter. The measured values were used to calculate the pressure loss in meters, however, Eaton has decided to use kPa within their expected pressure loss graph. Thus, table 5.1.3 can be used to obtain the correct values for further validation.

5.1.6 Raw Water: Pre Pump Post Pump Collection Pipe

The raw water measurements taken for this test produced the most reliable data for pressure losses from the intake pumping station to the filters. Unlike in the previous test where pressure losses decreased as the flow rate increase, the values here appear to mimic actual values that hold an acceptable degree of confidence. However, this confidence will be tested as these measured values are compared with the theoretical loss of the treatment plant.

The vales obtained and displayed in section 4.1.5 show an almost zero loss under static conditions, with the actual calculated loss being just over one centimeter. This proves that the elevation chosen as the measurements reference point, in addition to that used as the empty filter elevation are reasonably correct. An error this small could easily be due to errors within the builds construction, as it is not uncommon for an error to be present in the buildings actual ground elevation and floor separation as large as a few centimeters. This would explain a difference within the water surfaces of only 1.3 cm.

5.1.7 Raw Water: Static Mixer

The final test preformed on the raw water section of the treatment plant, was a test to measure the pressure loss through the static mixer. The pressure losses recorded were relatively small, as seen in table 4.1.8 of section 4.1.7. Theses losses attributed for a total of 12 and 19 cm for flow rates of 22 and 36 l/s. These losses are very small considering the static mixer should create turbulence as to increase the contact of the particles and the coagulant. This should create a relatively large minor loss coefficient in the process. Instead, the measured values where smaller than expected. One explanation for this would be that the theoretical pressure loss is only a rough estimate, leading one to believe the pressure loss should be larger. A second, and also likely explanation, is that the dimensions within the static mixer are larger than those called for in the design of the plant, allowing for a large volume of water to pass through the mixer and thus resulting in smaller pressure losses for the everyday flow rates of the treatment plant.

5.2 Theoretical Pressure Losses

It is important to remember that the theoretical pressure loss calculated for the treatment plant is just that, theoretical. Their reliability is purely based upon the methods ability to produce sound results and for theory to be correctly interpreted and executed. The results presented in section 4.2 are those of a theoretical pressure loss relying heavily on the Darcy-Weisbach equation for internal pipe flow and the minor loss equation for liquid flow.

5.2.1 Raw Water

The theoretical pressure loss within the raw water section of the treatment plant appears to have some interesting results as the vast majority of the total loss can be attributed to a small section of the treatment plant. The majority of the loss occurs within the piping connecting the intake pumps to the common water transport pipe. This loss is particularly large, totaling in 1.76 meters for only a single pump and decreasing to a total of 0.8797 meters for two pumps is parallel.

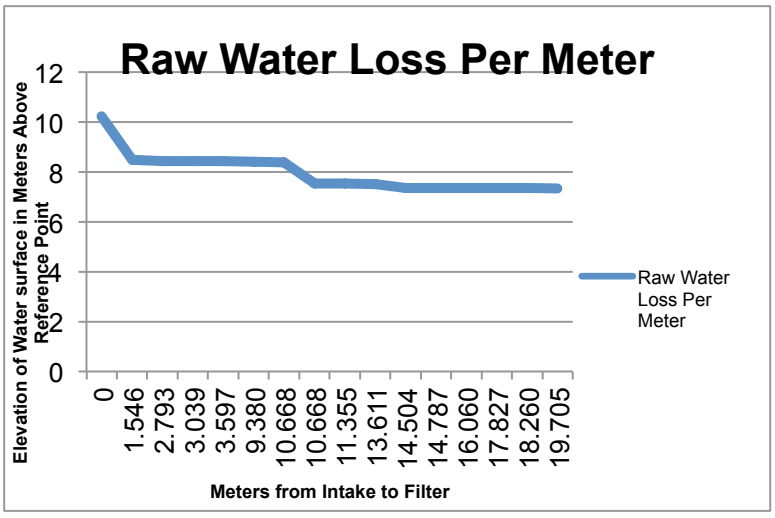

Figure 5.2.1: Graph showing the drop in pressure as the water is transported from the intake pump to the filter at 30 l/s.

While it may seem strange that the total pressure loss within the repeat sections of piping has decreased, as is anticipated. The total major and minor loss within a pipe is highly dependent on the velocity of the water, as it is the only variable within both major and minor loss equations that fluctuates with the total flow.

In the case of the intake pumps, the largest pressure loss is due to minor losses. The equation presented in equation 2.1.4, shows how while all other variables remain constant, the velocity is squared. Thus, if the total flow is suddenly split between two parallel sections of pipe, the flow and velocity, are also reduced by half. If the velocity is reduced by half, the resulting values for the minor pressure loss will subsequently be reduced to three fourths the original value. The pressure loss is calculated in the workbook for one of the iterations and then multiplied by the total number of repetitions. Thus, the total minor loss through two parallel pipes instead of one singular pipe for the same given flow will result in the original pressure loss being halved.

The large pressure loss within this section for a single pump in operation is partly due to the high velocity within the pipe. The high velocity is a direct result of the narrow diameter of the pipe. Throughout the rest of the raw water transportation, the pipes in use average a diameter of 25 cm. However, between the intake pump and the collective transport pipe, the diameter is only 15 cm. This means that a flow of 24 l/s will have a velocity of 0.67 m/s for 15 cm pipe, and 0.48 m/s for 25 cm pipe. This is a big difference when calculating the pressure losses as the velocity affects the total loss dramatically.

As for the rest of the raw water system, the pressure losses occur gradually aside from the noticeable decrease due to the static mixer. Theses losses have been plotted against their location within the plant, as well as against the length traveled between the intake pump to the filter. Both graphs visualize the path of pressure loss in a similar manner, with the only noticeable difference seen in the x-axis. The graph visualizing the loss per meter can be seen in figure 5.2.1, while the other can be found in appendix U.

5.2.2 Filtration

The theoretical results obtained for the clean bed head loss appear to be within reason, but the theory is not completely backed in this report, as some parameters were undeterminable. In order to circumnavigate these unknown parameters, the values obtained through the physical measurements were compared to those of the theoretical. These parameters were then tweaked until they provided accurate results for both of the tested flows.

Filtralite			Sand			Marble		
hl	0,04507	m	hl	0,141983	m	hl	0,686457	m
Kv	319		Kv	112,5		Kv	114	
K|	6		K|	2,25		K|	1,22	
ρw	999,7	kg/m	ρw	999,7	kg/m	ρw	999,7	kg/m
d	0,0008	m	d	0,00055	m	d	0,0004	m
ε	0,6		ε	0,415		ε	0,48	
μ	0,00131	kg/m*s	μ	0,00131	kg/m*s	μ	0,00131	kg/m*s
v	5,27344	m/h	v	5,27344	m/h	v	5,27344	m/h
g	9,81	m/s^2	g	9,81	m/s^2	g	9,81	m/s^2
L	0,6	m	L	0,4	m	L	2	m

Figure 5.2.2: Values used for calculating the theoretical pressure loss

As a result of this, it becomes difficult to distinctly proclaim if the theoretical value is accurate, or if both this calculation and the physical measurements contain the same flaw. The unknown variables, which were interpreted from the physical measurements, are the head loss coefficients due to viscous and internal forces. Theses values were required to be interpreted for both the Filtralite and the crushed marble.

While two of the media are lacking these values, Filtralite manufacturers do provide a graph showing the expected pressure loss through the filter media in meters of loss per meter of Filtralite. Using this graph, it is possible to determine the total loss for a filter layer of 60 cm, and a water temperature of 10 degrees Celsius. Appendix X contains the specs provided by the manufacturer, which show for a water temperature of 10 degrees, a pressure loss per meter of media should be approximately 0.075 meters. A loss of 0.075 m/m is equal to a loss of 0.045 meters at a depth of 0.6 meters of media. Using this as the loss that should be observed in the Filtralite, a trial and error method was used to determine the head loss coefficient for viscous and internal forces. This resulted in values of 319 and 6 respectively. Both of these values are abnormally large, but they do produce a pressure loss of 0.045 meters for a 0.6 meter layer of Filtralite with a diameter of 0.8 mm.

All variables were known for the sand layer, which only left a degree of uncertainty within the final layer of crushed marble. With the total pressure loss known through observation and the press loss through the Filtralite and sand established. The focus turned to recreating the total loss by adjusting the head loss coefficients for the crushed marble. This was again done through trial and error, but the end results provided a coefficient for viscous forces being equal to 144, and the coefficient for internal forces being equal to 1.22. These values are much more reasonable than those obtained for the first layer of Filtralite, and help provide an almost exact replication of the observed pressure losses. For a flow of 12 l/s, the observed loss was 32.8 cm, while the theoretical results gave a loss of 34.6 cm, less than a 2 cm difference. For a flow of 24 l/s, a loss of 68.8 cm was observed, while a theoretical loss was calculated at 69.7 cm of loss. For this example, the pressure loss was determined to be within 1 cm of the measured loss.

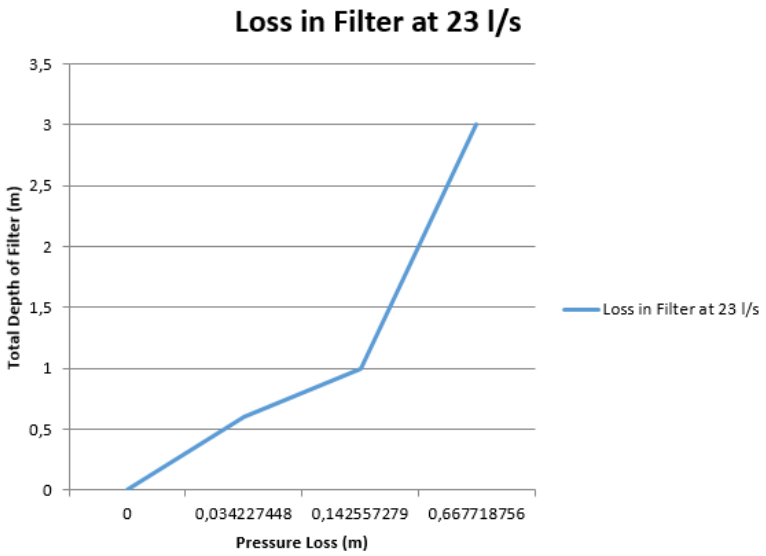

Figure 5.2.3: Pressure Loss through the filter at 23 l/s.

Interpretation of the variables for a theoretical calculation is not the desired method, as it should be possible to calculate the pressure loss based solely on theory. Instead, the theory was molded to the physical measurements in order to justify the results. While this may appear as a poor result, the accuracy in which the determined variables help to give valid results is a very useful tool for future calculations. These values can be transferred into the zeroed workbook to be stored for later use. This will help speed the process of designing a new treatment plant, and can be validated even further once said plant is in operation.

5.2.3 Clean Water

The distribution of the pressure loss through the clean water system mimics a lot of the observations from the raw water. Just as with the raw water intake pumps, the largest single portion of the pressure loss is due to the four pumping stations and the corresponding losses. These losses are due to the higher velocity through parts of the system. Particularly through the check valve which follows each of the four filter pumps. The check valve itself has a high minor loss coefficient, but that is not the driving force behind such a dominating loss of this section of the system. The driving force is the velocity through the valve, as the piping exiting the pumps is only 80 mm in diameters, compared to the 100mm following the post check valve expansion. This results in the water having a velocity of 1.19 m/s as it passes through the check valve, and dropping to 0.76 m/s after the pipe expansion.

Reference	Section	Total Major loss	Total Minor loss	Unit Process	Total Major+Minor Loss
Clean Water	Filter pump to collection	0,032206386	2,33503446	0	2,367240849
		0,07266647	0,22309251	0	0,295758985
	Filter 4 to 3	0,002494155	0,02976041	0	0,032254567
		0,000577584	0	0	0,000577584
	Filter 3 to 2	0,00215986	0	0	0,00215986
	Filter 2 to 1	0,00448909	0	0	0,00448909
	To UV Splt	0,028812058	0,10596894	0	0,134781002
	Straight UV	0,004859796	0,03256077	0	0,037420562
		0,000492746	0,01009884	0	0,010591584
	UV	0	0	0	0,01
	Side UV	0,006467052	0,02884256	0	0,03530961
		0,00079011	0,0156073	0	0,016397405
	UV	0	0	0	0
	To Storage	0,000840135	0,01652537	0	0,017365507
				Sum	2,964346604

Table 5.2.4: Pressure losses within clean water portion of treatment plant 30 l/s (Appendix W)

A velocity of 1.19 m/s through a valve is a significant velocity for any section of a treatment plant. It gains even more significance after the minor loss coefficient for the check valve was determined through testing to be 5.12 for a flow of 6 l/s, and even higher at 19.9 for a flow of 3 l/s. These values for the minor loss coefficient were calculated with the help of the measured pressure loss through the check valve, transition and elbow bend. The total measurements before and after these three components produced a concrete pressure loss for different flow rates. These losses could then be used to calculate the total minor loss coefficient for all three components. The loss coefficients for the elbow bend and expansion element are both known values, thus making it possible to subtract these from the total, and allow the minor loss coefficient for the check valve to be determined.

As can be observed with the previously mentioned values, the minor loss coefficient is not a constant for the check valve. This is not a strange observation, as the functionality of a check valve is to ensure one directional flow. Thus, there needs to be enough pressure behind the valve for it to completely open. If there is not enough pressure, but the flow is still traveling in the correct direction, the valve may partially close. This will lead to particularly large pressure losses through this valve.

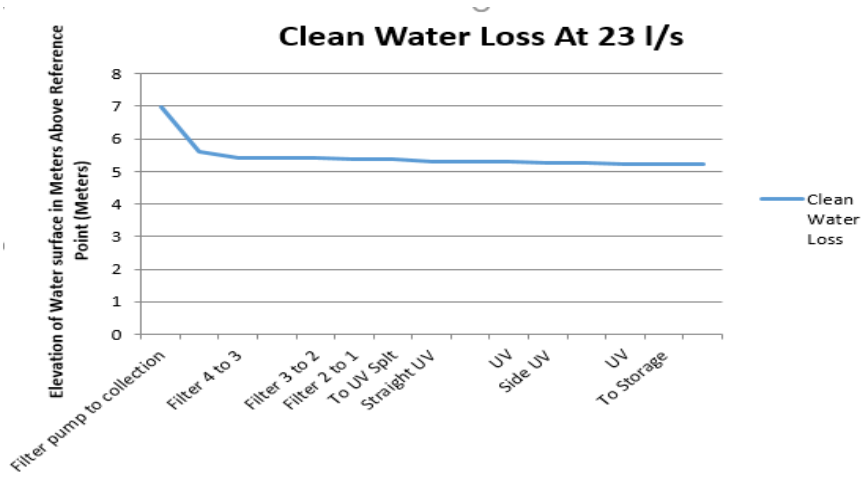

Figure 5.2.5: Graph showing pressure loss through the system.

Finally, it can be seen in the pressure loss graph depicting the decline in pressure as it travels through the clean water system, that the pressure loss is primarily due to the parallel pumping system. Aside from this initial loss, there is very little loss due to large singular losses or the UV disinfection unit. This is no surprise as the water does not travel very far and experiences very little in the way of singular losses due outside of the losses to the UV disinfection unit. This is the reason the graph displayed in figure 5.2.5 shows a large decline at the start, followed by a very gradual decline leading to the clean water storage tank.

5.3 Observed vs Theoretical

Throughout this paper, two sets of results have been presented and discussed. There has been a degree of intertwining the two while calculating the pressure loss through a clean filter, but for the most part, these values have been separated as theoretical values and measured results. These values will be compared with each other in the following section to portray the degree of accuracy the theoretical values hold within the Treungen treatment plant. The comparison between these two is very important, as the theoretical results are those used to design the treatment plant. The results and comparison of these two can be seen in the theoretical vs measured pressure loss graphs of appendix Y. The results obtained from the physical measurements seem to defy the theory and created a large degree of uncertainty in the internal flow, the theory and the procedures used for physical measurements.

5.3.1 Raw Water

The raw water pressure loss values for both the theoretical and measured flow follow a distinct curve as the water flows through the system. Both present the largest pressure loss occurring within the initial piping following the intake pump as the water travels at a high velocity through some of the more narrow piping of the raw water section. The raw water also passes through a check valve at each of these pumps, which was observed as being the major reason for a large pressure loss at this point.

The theoretical loss through the check valve shows a loss of only 0.518 meters at a flow of 22 l/s for a single pump in operation. The true value observed while measuring was much higher, showing that it was responsible for an entire 1.257 meters of loss, almost 2.5 times the theoretical loss. This has been discussed previously, but the most logical cause for this enormous inflection from the theoretical loss is due to the check valve. The true question is whether the valve is malfunctioning or if this is expected during operation. The manufacturer does not provide a chart for pressure loss as a function of flow, thus it becomes even more difficult to determine whether or not the valve is functioning as designed.

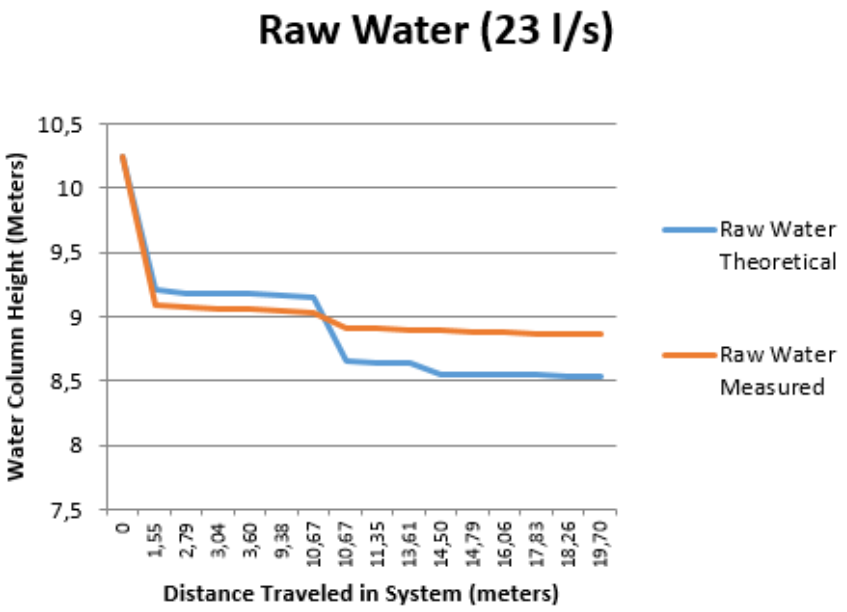

Figure 5.3.1: Graph comparing theoretical and measured pressure losses within the raw water system.

Either way, once the water has passed through the initial piping, both the theoretical and measured pressure losses appear to match each other very nicely. The only other large pressure loss seen on the theoretical pressure loss line is due to the static mixer. It has been previously mentioned that the theoretical loss through the static mixer is a rough estimate, and the measured loss indicated that the mixers dimensions could be larger than anticipated. This can be seen in the figure 5.3.1 as the pressure losses plotted against each other show a large drop after 10 meters of travel. Outside of the loss due to the static mixer, the results matched nicely. To compare the results of the major and minor losses for the two, the theoretical pressure loss was determined to be 0.29 meters along the entirety of the system, while the measured loss was only 0.22 meters. Leaving an error within the theoretical results of on 7 cm. This may not be a large difference, but can still be considered to be noticeable when the total is under 30 cm.

5.3.2 Filtration

Clarifying the difference between the theoretical and measured values of pressure loss through a clean filter creates a dilemma as the measured values were used to calculate the theoretical pressure loss through one of the filter medias. The total loss is a combination of the loss within the three separate filter medias; Filtralite, sand and crushed marble. The pressure loss for the Filtralite was provided via the product specification, this lead to the possibility derivation of the unknown parameters for the coefficients for the viscous and internal forces by use of trial and error. Sand is a common filter media for rapid filtration, thus its parameters are widely available, and the theoretical loss easily calculated. With the pressure loss through the first two layers of the media known, the loss through the final layer of crushed marble could be determined by comparing it to the total measured loss.

While it may not be the desired method for calculating the theoretical results, this process did produce the coefficients in question. Both the coefficients of viscous and internal forces were deduced and appear to yield results within an acceptable range of accuracy, yet questions should be raised about the validity of these coefficient values. For example, for viscous forces within the Filtralite, it was determined that the coefficient must be equal to 319, with the internal forces coefficient equal to 6. These are extremely high considering the crushed marble was determined to have coefficients of 114 and 1.22 respectfully. The values computed for the Filtralite appear to be extraordinarily high, but the loss determined matches the predicted loss for filtered water with a temperature of around 10˚C.

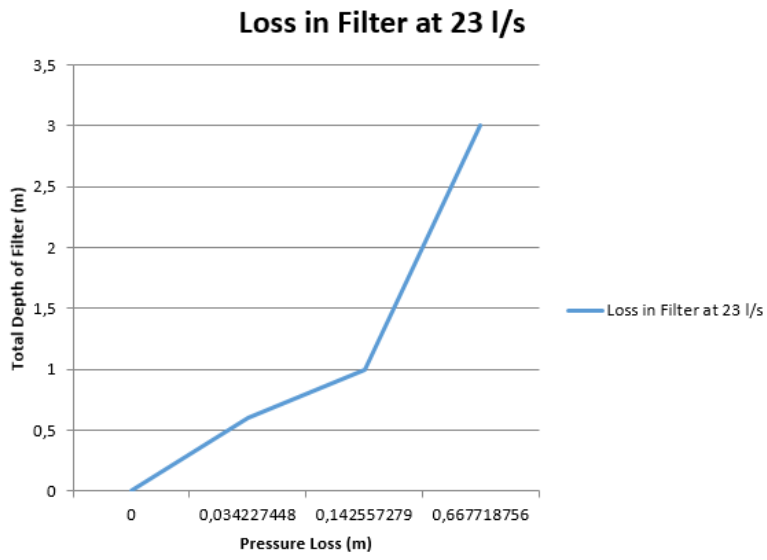

Figure 5.3.2: Pressure Loss through the filter at 23 l/s.

The main difficulty with comparing the theoretical losses and the observed losses is that within the treatment plant, it is impossible to measure the losses through each of the separate filter media. The clean bed head loss equation is a combination of each layer, meaning a theoretical loss per layer must be calculated to obtain the total. However, given that the measurements were taken at a treatment plant in operation instead of in a laboratory, it was impossible to compare the loss per layer. Instead the total loss was determined and the loss per layer remains purely theoretical, and can only be analyzed as a total value. Making a reliable comparison of the theoretical loss per layer to the actual loss per layer very difficult.

5.3.3 Clean Water

The clean water system at the Treungen drinking water treatment plant consists of four pumps working in parallel to transport clean water exiting the filtration stage of the process, through a UV disinfection unit and finishes with the water entering a storage tank where it will remain until sent out into the distribution network. The losses computed and observed are similar in many ways. As can be expected when considering the evaluation of the raw water, the largest losses were due to the parallel piping exiting the filter pumps. The check valve following each of the four pumps adds a large amount of loss as the combination of a high velocity due to narrow piping and a large minor los coefficient.

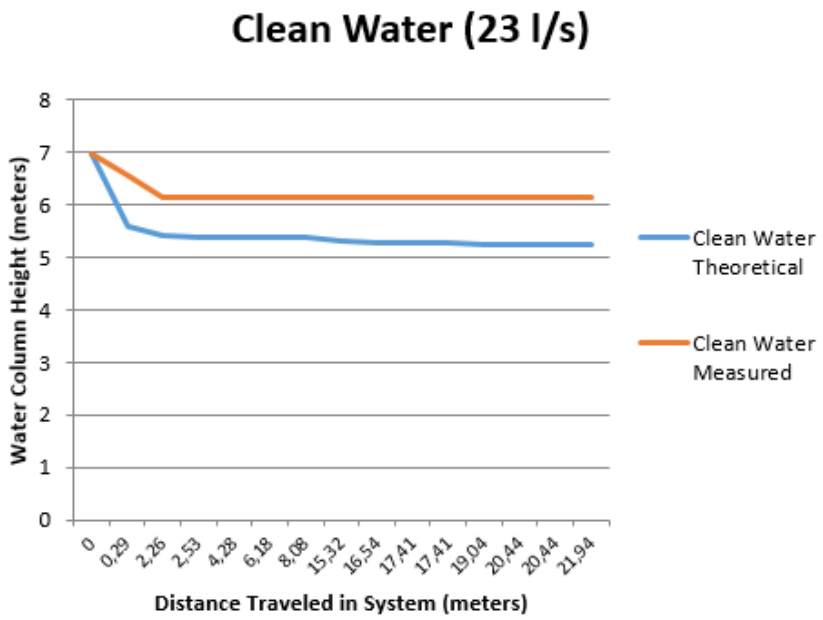

5.3.3: Graphical comparison of theoretical vs. measured losses

This section created some discontinuity between the theoretical and the observed pressure losses. The theoretical measurements placed a total loss of 5.53 meters of pressure, while the measured accounted for a total of 6.56 meters through the four parallel pumps. It is very important though to understand that while each of the sections will experience a loss that equal these values in total, the pressure experienced within the collection pipe will not mimic a loss as large. Table 5.3.1 is a great example that shows how the combination of the pumps will work together to mitigate the total loss. As can be seen using an example flow rate of 3 l/s, the loss experienced within one single check valve totals at 1.458 meters. However, the total loss between the pressure measurement taken on the pressure side of the filter pump, and the pressure taken after the four filters have collected into a single pipe, shows a total loss of only 0.83 meters. This is because while the singular loss is large for each of the four check valves, the pumps work together to deliver a high pressure, and prevent the pressure from dropping to drastically. This is not present in figure 5.3.3 as the total pressure loss for each of the parallel pipes has been combined.

Flow (l/s)	Post Filter Collection (m)	Post Check Valve (m)	Pre Check Valve (m)	Loss in Check Valve (m)	Loss to Collection (m)
6	5.4453048	5.2107692	6.9137016	1.7	1.4683968
3	5.710432	5.0986	6.5466024	1.458	0.8361704
1.5	5.6492488	4.9864308	6.1998976	1.21	0.5506488

Table 5.3.1: Loss in the collection/combination pipe is not as large as the total loss.

Aside from the filter pumping piping, the only minor source of pressure loss prevalent between the filters and the storage tank is that of the UV disinfection unit. This unit is a highly functional process that has been designed with pressure loss in mind, as it produces almost no loss. This was not tested independently with physical measurements, but the pressure loss between the post filter test, and the water surface elevation of the storage tank was used to produce a value for the entire section. In this case, the theoretical loss was calculated to be much larger than the actual measured loss.

6 CONCLUTION AND FUTURE WORK

6.1 Conclusion

The pressure losses observed and theorized throughout the drinking water treatment plant located a Treungen, provided an excellent example of the relationship between theory and practice. The Excel workbook developed through this project is capable of predicting the observed pressure losses within a reasonably acceptable margin of error. However, future work could help reduce the margin of this error. Regardless, the workbook holds the potential for simplifying the design process of future drinking water treatment plants. There was however, a larger loss prediction than that which was observed.

As seen in section 5, when compared with the observed values, the theoretical pressure losses through the Treungen treatment plant predicted a larger losses than those observed. Figures 5.3.1 and 5.3.3 show these values graphed side by side for the raw and clean water sections respectfully. While it may be easy to view these graphs and conclude that the theoretical results are off basis as they do not provide the similar results, it would be short sighted to assume such. While it may seem illogical, with respect for designing a new system, it is much better to be prepared to handle a larger pressure loss than that which will occur. That is to say, it is better to expected a large pressure loss and experience a small one, than to expect a minor loss in pressure, yet experience a large loss in pressure. This can be helpful, as a pump will require to work less to provide the same desired end of pipe pressure, while being able to deliver a higher flow rate than previously presumed. Thus, the workbooks results, while not completely in line with those observed, should provide the user with the desired results.

As stated, the developed spreadsheet provides results that, for the majority, are within a reasonable range of error. The raw water section, for example, was calculated as having only 3.5% more loss than the actual observed loss. This is slightly in contrast to the clean water section, which had predicted a loss of approximately 16% more than that observed. The calculated results for the raw water section provide an excellent example of how the calculations used within this workbook, can be carried with an adequate degree of confidence. However, the difference of 16%,

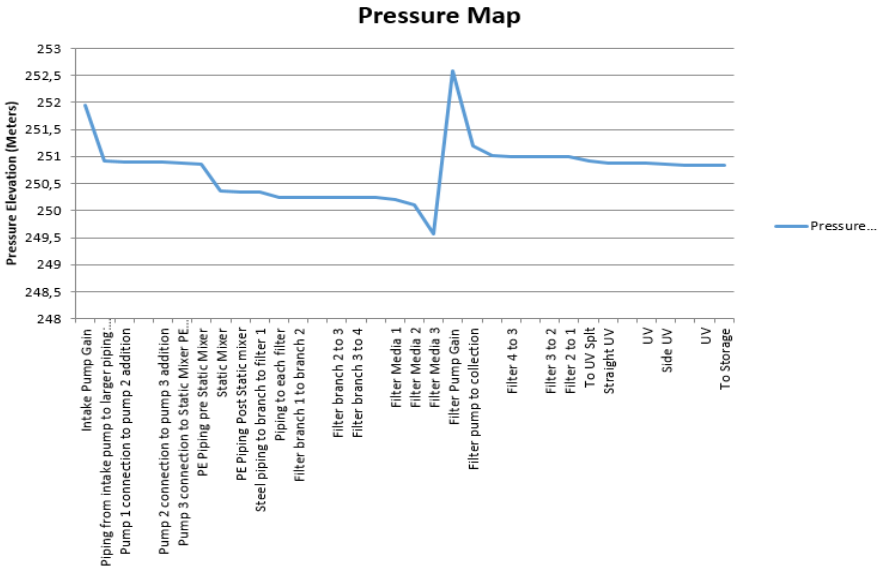

Figure 6.1.1: Total theoretical pressure loss through the Treungen drinking water treatment plant. (Appendix Y)

for the clean water portion of the treatment plant, is too large and must be evaluated more closely.

One reason that some of the values may not be as accurate as one would prefer, is that there were a few small geometrical aspects of the treatment plant that could have been incorporated within the minor loss coefficients. This would include some of the small intricate aspects of the internal geometry for several components and fitting, such as the internal width of a butterfly valve. The in depth evaluation with these minor details included, could help to reduce that percent error, as the minor loss coefficients used within the Excel spreadsheet are more rule of thumb values to produce an initial estimation of the total pressure loss. This may very well cause some small discrepancies within the total pressure loss for each section of the treatment plant. These discrepancies could be solved through future work with the spreadsheet, as it could be used to predict the pressure loss within other existing treatment plants for further evaluation and validation.

6.2 Future Work

While the majority of the desired measurements and results were obtained from the pressure readings taken at the Treungen drinking water treatment plant, there still remains the possibility for future work to be done. This work entails laboratory testing in addition to further validation and expansion of the developed Excel workbook through additional tests. These tests could be preformed not only at the Treungen treatment plant, but any other plant made available for testing as to validate the workbook even further. The comparison of the developed spreadsheet with as many possible existing treatment plants is a key step in determining the spreadsheets abilities, as they will not rely on the produced results, but rather help to debug and increase the confidence of the produced results.

In order to completely validate the developed workbook, some of the parameters derived from the observed results need to be further tested, as they could only be determined for the tested flow conditions. These parameters consist mainly of the minor loss coefficients related to the post pump check valves placed throughout the treatment plant. The manufacturer of these valves did not provided any information regarding the expected pressure loss. Thus, it would make sense to revisit the treatment plant, and continue taking measurements before and after each sized check valve, for a large variety of flow rates. These results could then be used to create a graph and extrapolate a polynomial trend line. This trend lines equation could then be used to express the pressure loss as a function of the flow rate, and thus be incorporated into the total theoretical loss.

Another parameter that should be tested is the pressure loss coefficients through the filter media. This would need to be tested in a lab, as sufficient results could not be obtained within the treatment plant. More specifically, the parameters relating to the crushed marble should be tested within a lab, as it is a common filter media in Norway, yet the parameters needed for a clean bed head loss calculation are difficult to obtain. This could easily be done through lab testing, as the majority of the parameters are easily obtainable. Leaving only a few that would require validation.

A final aspect of the Excel workbook that could be added to the developed spreadsheet, is the ability to integrate the added pressure due to pumps and pumping stations. This was implemented in the first version of the reusable spreadsheet, but proved to be ultimately unsuccessful. The addition of this feature would however help by implementing the possibility of selecting, and testing the results due to different sized pumps. This could help to

given an even clearer picture of the hydraulics, as the increase in pressure due to the pumping stations are just as important for the plants functionality as the losses.

Other than the values calculated through the use of excel, there is one future test that could be preformed to determine the true pressure losses within the system. This test would need to be completed at the Treungen drinking water treatment plant. It would entail taking some of the pressure tests again, but add the velocity head to the total pressure head of the pipe. This will create a larger starting pressure for some of the tested areas where pressure gains were observed. This may help to solve part of the positive pressure problems observed when taking pressure measurements. It could help to clarify the obtained results, but would still not explain the variation on the pressure readings. This could also be obtained through the use of Bernoulli's equation presented in section 2.1.3, instead of the Darcy-Weisbach method. Through use of total head instead of only limiting the values to pressure, the actual loss within some of the pipe may be correctly calculated.

Each of the suggested future additions to this project would be interesting to dig deeper into, however, due to time limits, these aspects could not be placed within this paper. Hopefully the excel spreadsheet will be able to be used in the future and truly tested to find the programs limits. This leaves the door open for future endeavors within the exploration of theoretical and observed pressure losses within drinking water treatment plants.

7 REFERENCES

[1] (2015, 22.9.15). "Pressure Problems." Retrieved 1.7.16, 2016, from http://res.cloudinary.com/engineering-com/image/upload/v1442928533/tips/Document127_pddvwn.jpg.

[2] (2016). "The Engineering Toolbox." Darcy-Weisbach Pressure and Headloss Equation. Retrieved 04.02.2016, 2016, from http://www.engineeringtoolbox.com/darcy-weisbach-equation-d_646.html.

[3] (R Nave). "HyperPhysics." Bernoulli Equation. from http://hyperphysics.phy-astr.gsu.edu/hbase/pber.html.

[4] (2016). "The Engineering Toolbox." Colebrook Equation. Retrieved 10.02.2016, 2016, from http://www.engineeringtoolbox.com/colebrook-equation-d_1031.html.

[5] (2016). "The Engineering Toolbox." Minor Loss Coefficients in Pipes and Tubes Components. Retrieved 14.02.2016, 2016, from http://www.engineeringtoolbox.com/minor-loss-coefficients-pipes-d_626.html.

[6] Frost, J. (2013). Regression Analysis: How Do I Interpret R-squared and Assess the Goodness-of-Fit? The Minitab Blog. Pennsylvania, Minitab Inc. **2016**.

[7] (2016). "The Engineering Toolbox." Pumps in Parallel or Serial. Retrieved 04.03.2016, 2016, from http://www.engineeringtoolbox.com/pumps-parallel-serial-d_636.html.

[8] (2016). "Bar to mH2O - Water pressure to column of water height." from http://www.sensorsone.com/bar-to-mh2o-water-pressure-to-column-of/.

[9] Ellis, T. (2010). *Sedimentation & Filtration* [PowerPoint slides]. Retrieved from http://www.slideplayer.com/slide/9625494/

[10] (2012). "Pressure Loss From Fittings - Excess Head (k) Method." Retrieved 03.06.2016, 2016, from https://neutrium.net/fluid_flow/pressure-loss-from-fittings-excess-head-k-method/.

[11] Adkins, G. B. (2006). Flow Measurement Devices. D. o. W. Rights.

[12] Bengtson, H. (2011). "Low Cost Easy to Use Spreadsheets for Engineering Calculations Available at Engineering Excel Spreadsheets." Retrieved 12.06.2016, from http://www.engineeringexcelspreadsheets.com/2011/05/rectangular-weir-flow-calculator/.

[13] "Analysis Of Flow In Pipe." Minor Loss. Retrieved 21.06.2016, 2016, from http://analysisofflowinpipes.jimdo.com/contents/minor-head-loss/.

[14] Ødegaard, H. (2012). Vann-og avløpsteknikk, Norsk Vann.

[15] Crittenden, J. C., Trussell, R. R., Hand, D.W., Howe, K. J., Tchobanoglous, G., Borchardt, J. H. (2012). MWH's Water Treatment: Principles and Design. Hoboken, New Jersey, John Wiley & Sons, Inc.

[16] (2016). "The Engineering Tollbox." Major Loss in Ducts, Tubes and Pipes. Retrieved 08.03.2016, 2016, from http://www.engineeringtoolbox.com/major-loss-ducts-tubes-d_459.html.

[17] Essom CO., L. (2016). Moody Diagram. Bangkok Thailand.

[18] Fraenkel, P. L. (1986). Water Lifting Devices. Rome, Italy, Food and Agriculture Organization of the United Nations Via delle Terme di Caracalla.

[19] Miller, D. S. (1990). Internal Flow Systems. Houston, Texas, Gulf Publishing Company.

[20] *Lecture 8 Internal Flow* [PowerPoint Slides]. Retrieved from https://www.emaze.com/@AOWTRQIF/Lecture-8-Internal-Flow.pptx

[21] Semerci, N. (2015). *Basic Fluid Mechanics: Major losses, Colebrook-White equation, Jain equation, Moody diagram, minor losses* [PowerPoint Slides]. Retrieved from http://mimoza.marmara.edu.tr/~neslihan.semerci/ME262/ME262Lecture8.pdf

[22] Larock, Jeppson, & Watters, "Hydraulics of Pipeline Systems", 2000

[23] "Module 5: Viscous Incompressible Flow." Lecture 6:Internal Flow-Part V. Retrieved 04.07.2016, 2016, from http://nptel.ac.in/courses/101103004/module5/lec6/5.html.

8 APPENDIX

Appendix A: Treungen Treatment Plant Design

Appendix B: Moody Diagram

Appendix C: Colebrook Diagram

Appendix D: Examples of Singular Loss Coefficients

Appendix E: Example Check Valve Diagram

Appendix F: Pre Intake Pump Filter Diagram

Appendix G: Measured Pressure Loss Through Filter, Pre/Under/Post Ripening

Appendix H: Diaphragm Valve Spec Sheet

Appendix I: Measured Values For Post Filter Check Valve

Appendix J: Measured Values For Post Filter Pipe Collection

Appendix K: Pressure Loss Curve For UV Disinfection Process

Appendix L: Measured Values Post Intake Pump

Appendix M: Pre Pump Filter Specifications

Appendix N: Measured Values For Pre Pump Filter Loss

Appendix O: Measured Values For Post Intake Pump Combination Pipe

Appendix P: Measured Losses From Static Mixer

Appendix Q: Compilation Of Measured Values For Raw Water

Appendix R: Compilation Of Measured Values For Clean Water

Appendix S: Blank/Zeroed Workbook Ready For A New Project

Appendix T: Visual Basic Editor Code

Appendix U: Theoretical Results and Graphs For Raw Water

Appendix V: Theoretical Results and Graphs For The Filter

Appendix W: Theoretical Results and Graphs Clean Water

Appendix X: Data For Filtralite MC Filter Media

Appendix Y: Enlarged Theoretical Vs. Measured Pressure Loss Graphs

Appendix A:

Treungen Treatment Plant Design

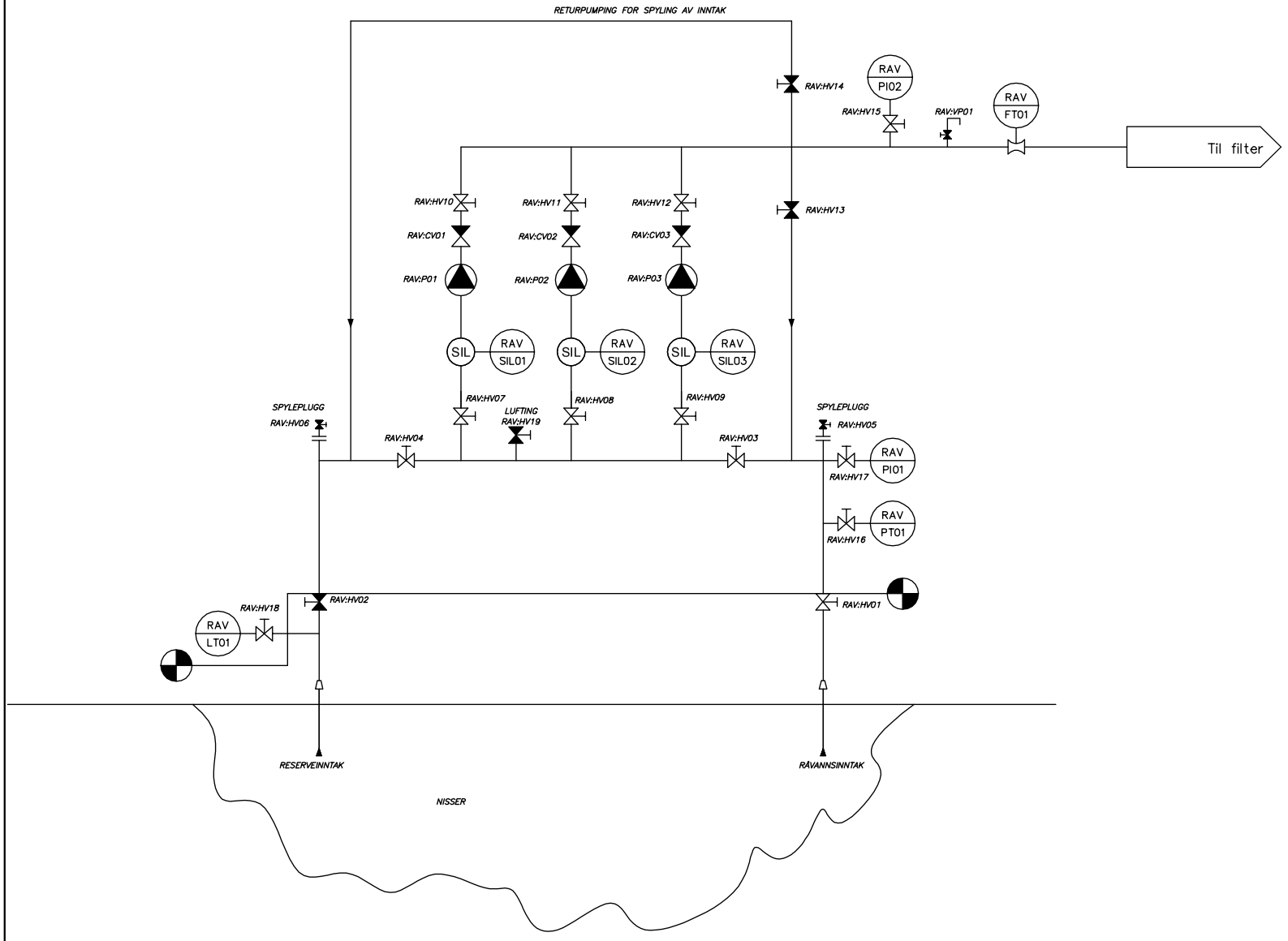

Tegningsnummer:
P M---- 001

Revisjon:

Rev.	Tekst	Rev.dato:	Kontr:
- =	-	-	-
- =	-	--	-
-			
-			
-			
-			
-			
-			
-			

TILBUDSTEGNING

asplan viak

Prosjekt:
Treungen VV
Oppdragsgiver:
Nissedal kommune

Flytskjema

Vannbehandlingsanlegg

Råvannspumpestasjon

Oppdragsleder:	Tegn:	Målestokk
PHT	MM	-
Oppdragsnr.:	Kontr:	Dato:
527056	PHT	2013-10-21

Tegn. nr:
P M 001
Fag Type Etg. Løpenr.

Rev.
-- -A

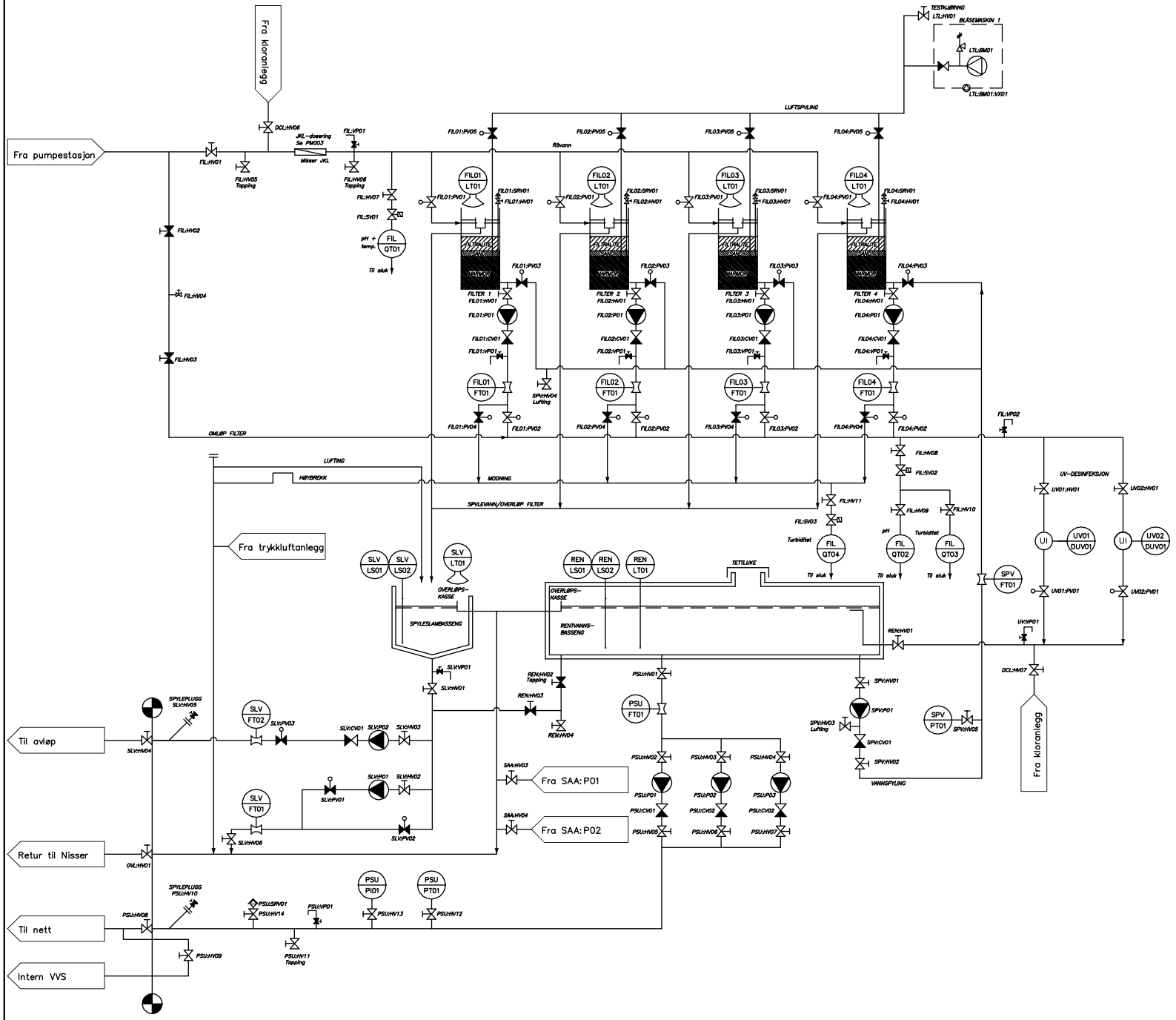

Tegningsnummer:
P M---- 002

Revisjon:

Rev.	Tekst	Rev.dato:	Kontr:
-	-	-	-
-	-	--	-
	-		
	-		
	-		
	-		
	-		
	-		
	-		

TILBUDSTEGNING

asplan viak

Prosjekt:
Treungen VV

Oppdragsgiver:
Nissedal kommune

Flytskjema

Vannbehandlingsanlegg

Filter, slam og rentvann

Oppdragsleder:	Tegn:	Målestokk
PHT	MM	-
Oppdragsnr.:	Kontr:	Dato:
527056	PHT	2013-10-21

Tegn. nr:

P M 002

Fag Type Etg. Løpenr.

Rev.
-- -A

JERNKLORIDDOSERING

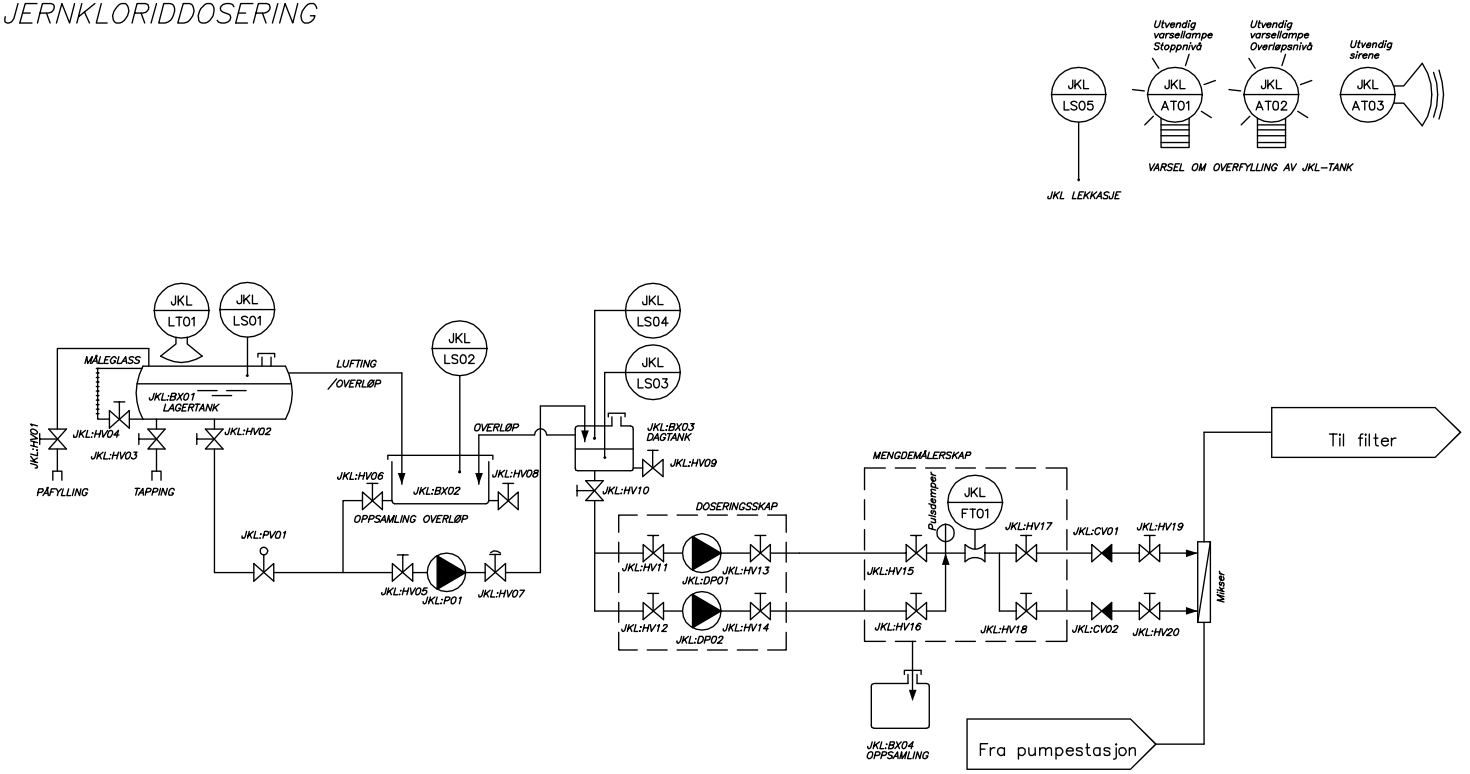

KLORDOSERING

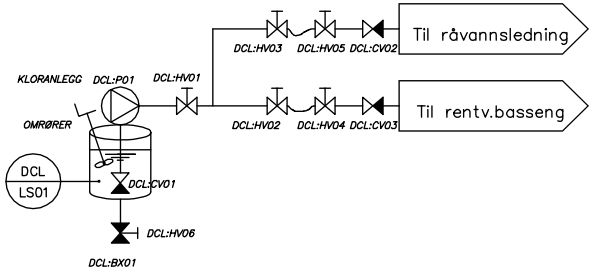

Tegningsnummer: **P M ---- 003**

Revisjon:

Rev.	Tekst	Rev.dato:	Kontr:
- =	-	-	-
- =	-	--	-
-			
-			
-			
-			
-			
-			
-			

TILBUDSTEGNING

asplan viak

Prosjekt:
Treungen VV

Oppdragsgiver:
Nissedal kommune

Flytskjema

Vannbehandlingsanlegg

Dosering JKL, og klor

Oppdragsleder:	Tegn:	Målestokk
PHT	MM	-
Oppdragsnr.:	Kontr:	Dato:
527056	PHT	2013-10-21

Tegn. nr: **P M 003**
Fag Type Etg. Løpenr.

Rev. **-- - A**

ELEKTRISK ANLEGG

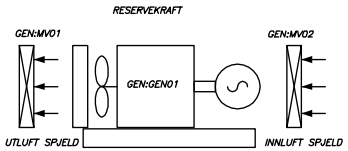

TRYKKLUFTANLEGG

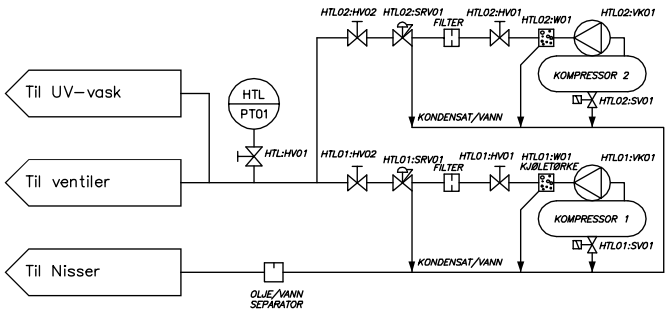

SPILLVANNSPUMPESTASJON I KJELLER

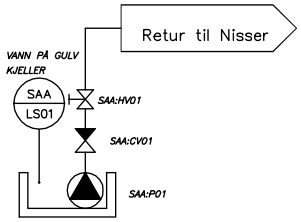

SPILLVANNSPUMPESTASJON I RØRGALLERI

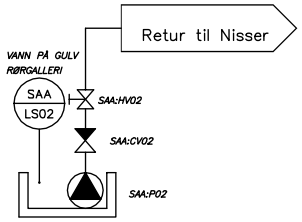

INTERN VANNFORSYNING

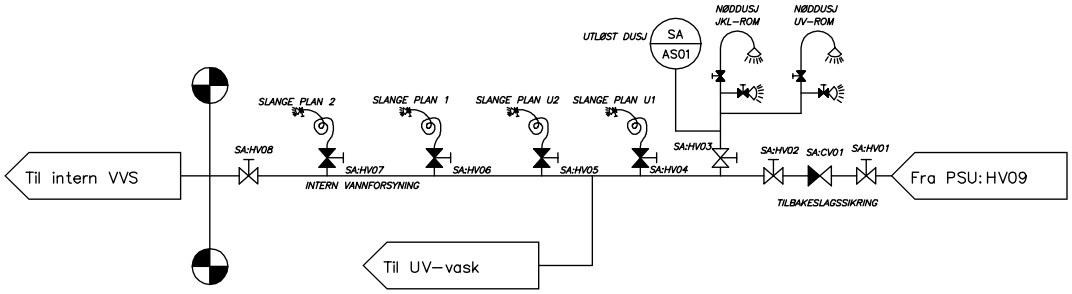

Tegningsnummer:
P M---- 004

Revisjon:

Rev.		Tekst	Rev.dato:	Kontr:
-	=	-	-	-
-	=	-	--	-
		-		
		-		
		-		
		-		
		-		
		-		
		-		

TILBUDSTEGNING

asplan viak

Prosjekt:
Treungen VV
Oppdragsgiver:
Nissedal kommune

Flytskjema

Vannbehandlingsanlegg

Støttesystemer: Trykkluft, VVS, El

Oppdragsleder: PHT	Tegn: MM	Målestokk -
Oppdragsnr.: 527056	Kontr: PHT	Dato: 2013-10-21

Tegn. nr:
P M 004
Fag Type Etg. Løpenr.

Rev.
-- - A

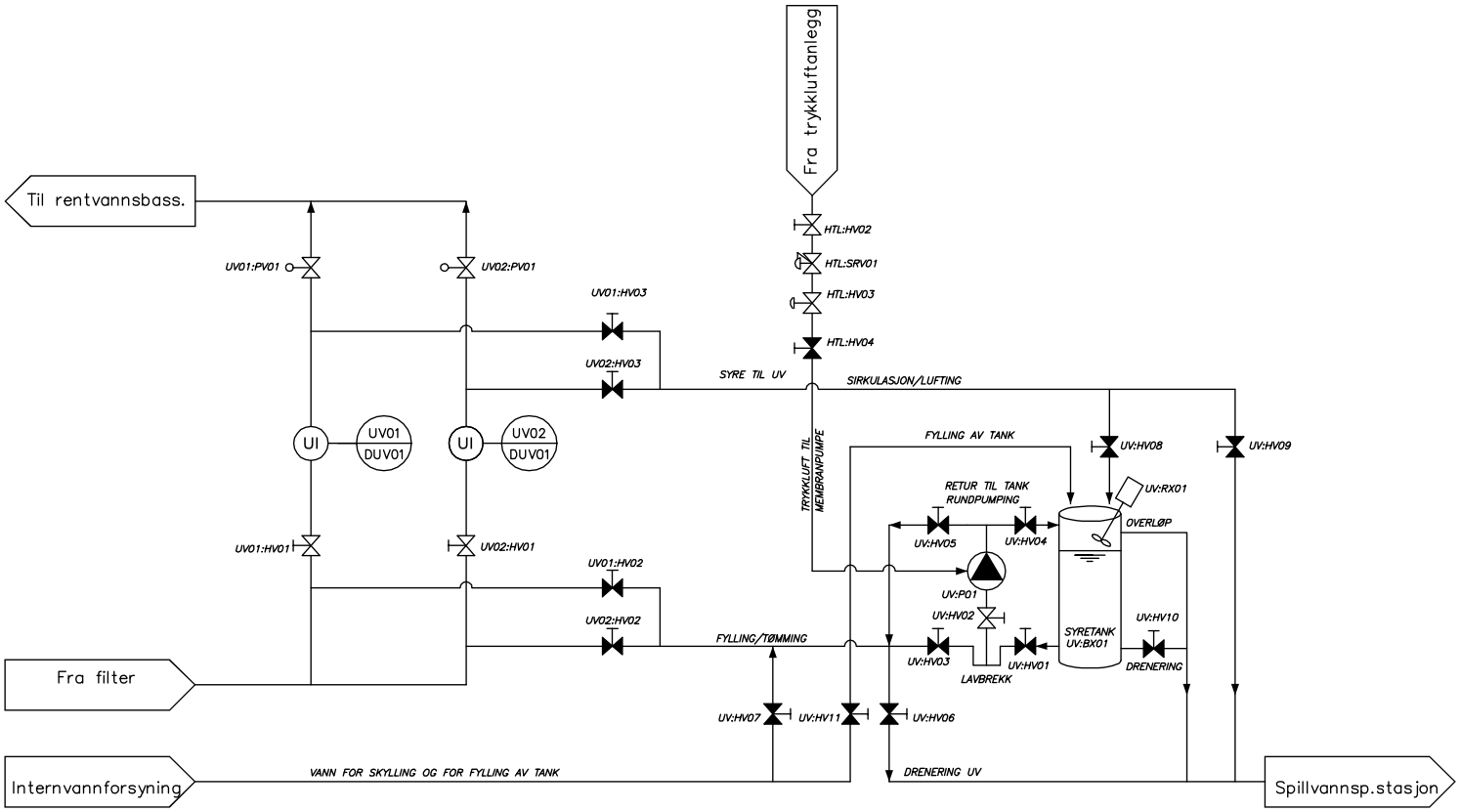

Tegningsnummer:
P M---- 005

Revisjon:

Rev.		Tekst	Rev.dato:	Kontr:
-	=	-	-	-
-	=	-	--	-
		-		
		-		
		-		
		-		
		-		
		-		
		-		

TILBUDSTEGNING

asplan viak

Prosjekt:
Treungen VBA

Oppdragsgiver:
Nissedal kommune

Flytskjema

Vannbehandlingsanlegg

UV-vaskeanlegg

Oppdragsleder:	Tegn:	Målestokk
PHT	MM	-
Oppdragsnr.:	**Kontr:**	**Dato:**
527056	PHT	2013-10-21

Tegn. nr:

P M 005 (Fag Type Etg. Løpenr.)

Rev.

-- -A

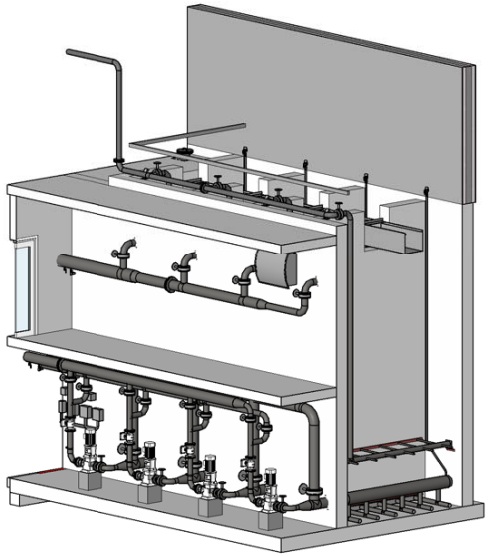

1 Filter

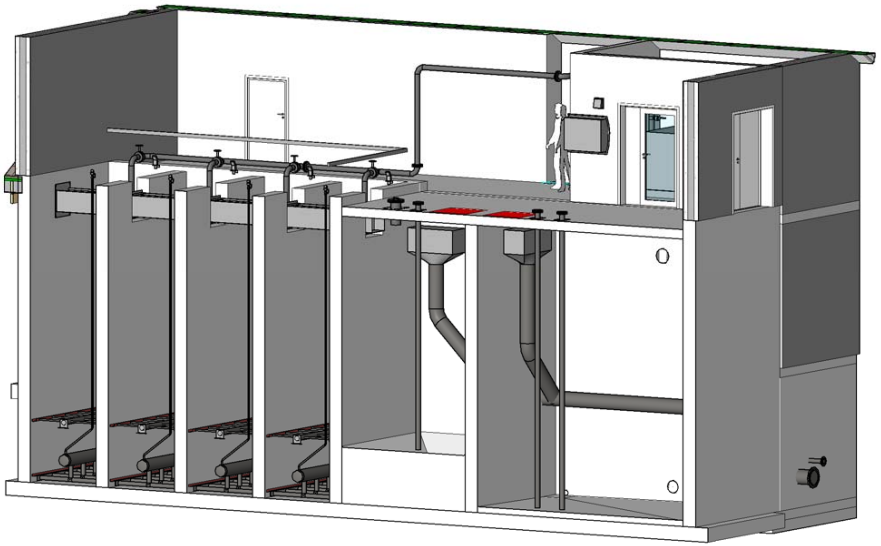

2 Bassenger og filter

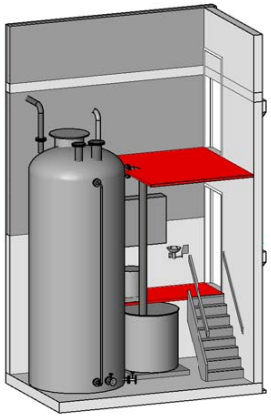

3 JKL-rom

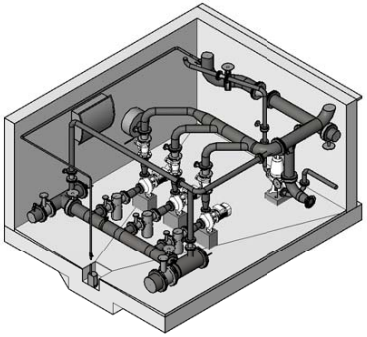

4 Råvannspumper

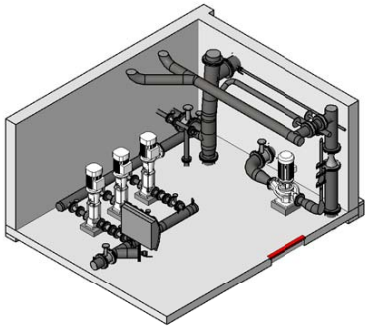

5 Rentvannspumper

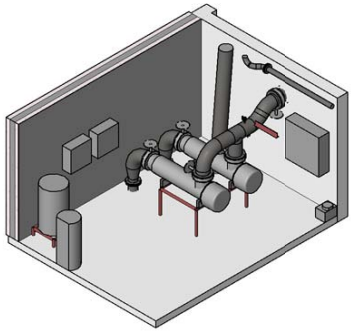

6 UV

Tegningsnummer: PC001 Revisjon: 0A

Rev.	Tekst:	Rev.dato	Tegn.	Kontr.
0A-	TILBUDSTEGNING	2013-10-21		

TILBUDSTEGNINGER

asplan viak

Prosjekt: Treungen vv

Oppdragsnr.: Nissedal kommune

3D visninger

Prosessanlegg

Oppdragsleder:	Tegn:	Målestokk:
PHT	MM	(A1)
Oppdragsnr.: 527056	Kontr: PHT	Dato: 2013-10-21

Tegn. nr. **PC001** Rev. **0A**

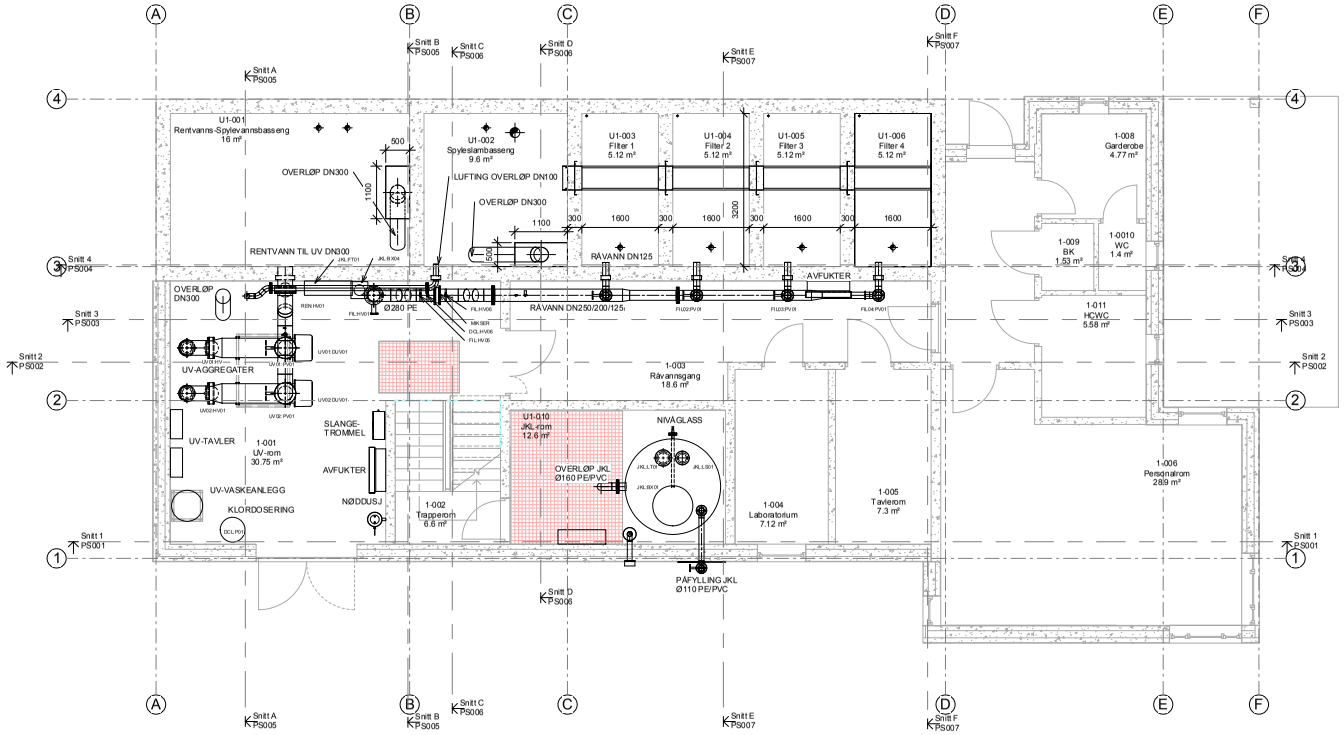

1 Nivå 1

1 : 50

Tegningsnummer: PP01001	Revisjon: 0A

Rev.	Tekst:	Rev.dato	Tegn.	Kontr.
0A	TILBUDSTEGNING	2013-10-21		

TILBUDSTEGNINGER

asplan viak

Prosjekt:
Treungen vv

Oppdragsgiver:
Nissedal kommune

Plan 1

Prosessanlegg

Oppdragsleder: PHT	Tegn: MM	Målestokk: 1 : 50 (A1)
Oppdragsnr: 527056	Kontr: PHT	Dato: 2013-10-21

Tegn. nr: **PP01001** Rev: **0A**

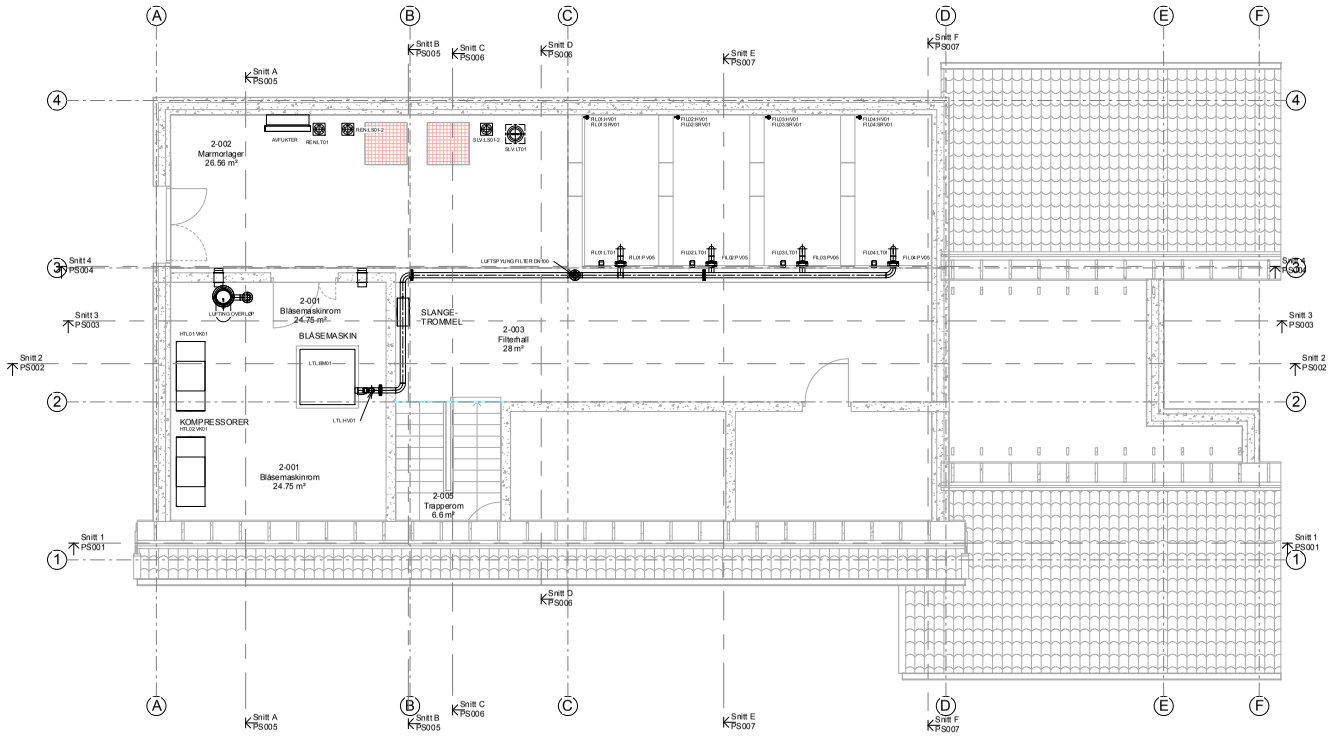

1 Nivå 2

1 : 50

Tegningsnummer	Revisjon
PP02001	0A

Rev.	Tekst	Rev.dato	Tegn.	Kontr.
0A	TILBUDSTEGNING	2013-10-21		

TILBUDSTEGNINGER

asplan viak

Prosjekt
Treungen vv

Oppdragsgiver
Nissedal kommune

Plan 2

Prosessanlegg

Oppdragsleder: PHT	Tegn: MM	Målestokk: 1 : 50 (A1)
Oppdragsnr: 527056	Kontr: PHT	Dato: 2013-10-21

Tegn. nr. **PP02001** Rev. **0A**

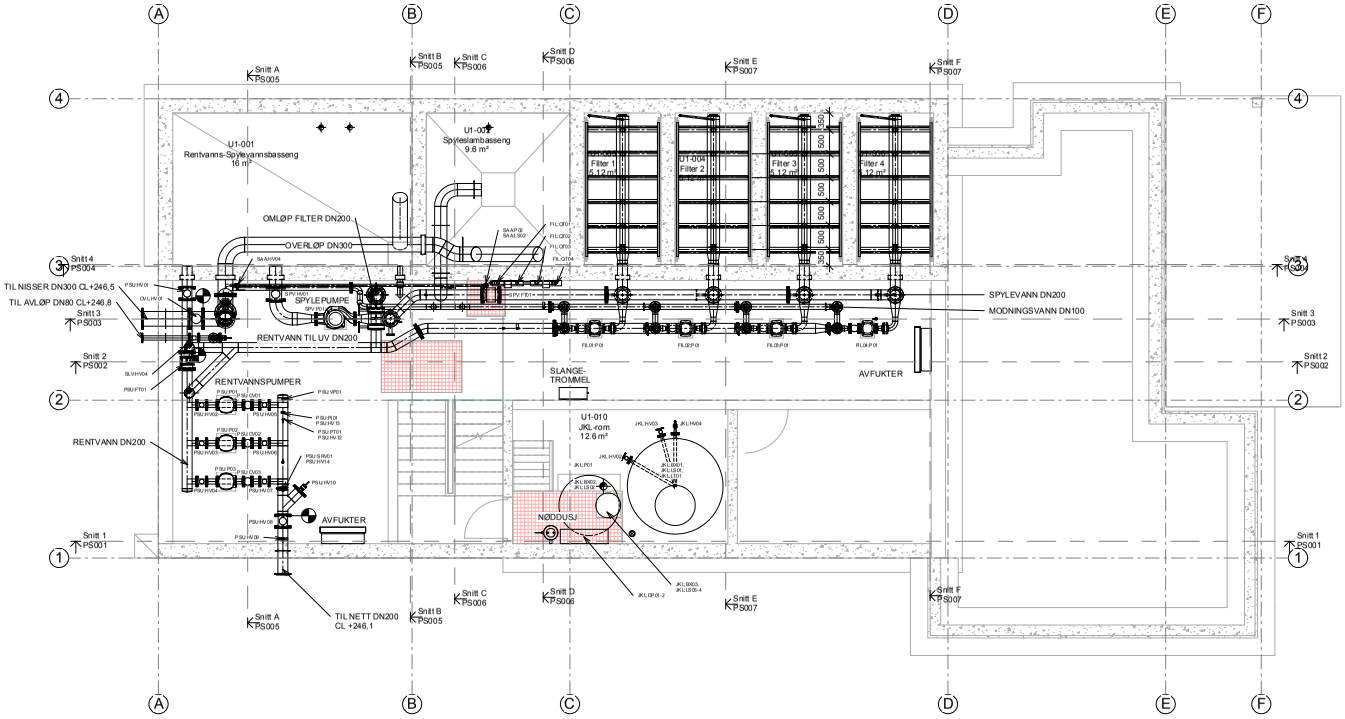

1 Nivå U1
1 : 50

Tegningsnummer:	Revisjon:
PPU1001	0A

Rev.	Tekst:	Rev.dato	Tegn. Kontr.
0A-	TILBUDSTEGNING	2013-10-21	

TILBUDSTEGNINGER

asplan viak

Prosjekt:
Treungen vv

Oppdragsgiver:
Nissedal kommune

Plan U1
Prosessanlegg

Oppdragsleder:	Tegn:	Målestokk:
PHT	MM	1 : 50 (A1)
Oppdragsnr.:	Kontr:	Dato:
527056	PHT	2013-10-21

Tegn. nr:	Rev.
PPU1001	0A

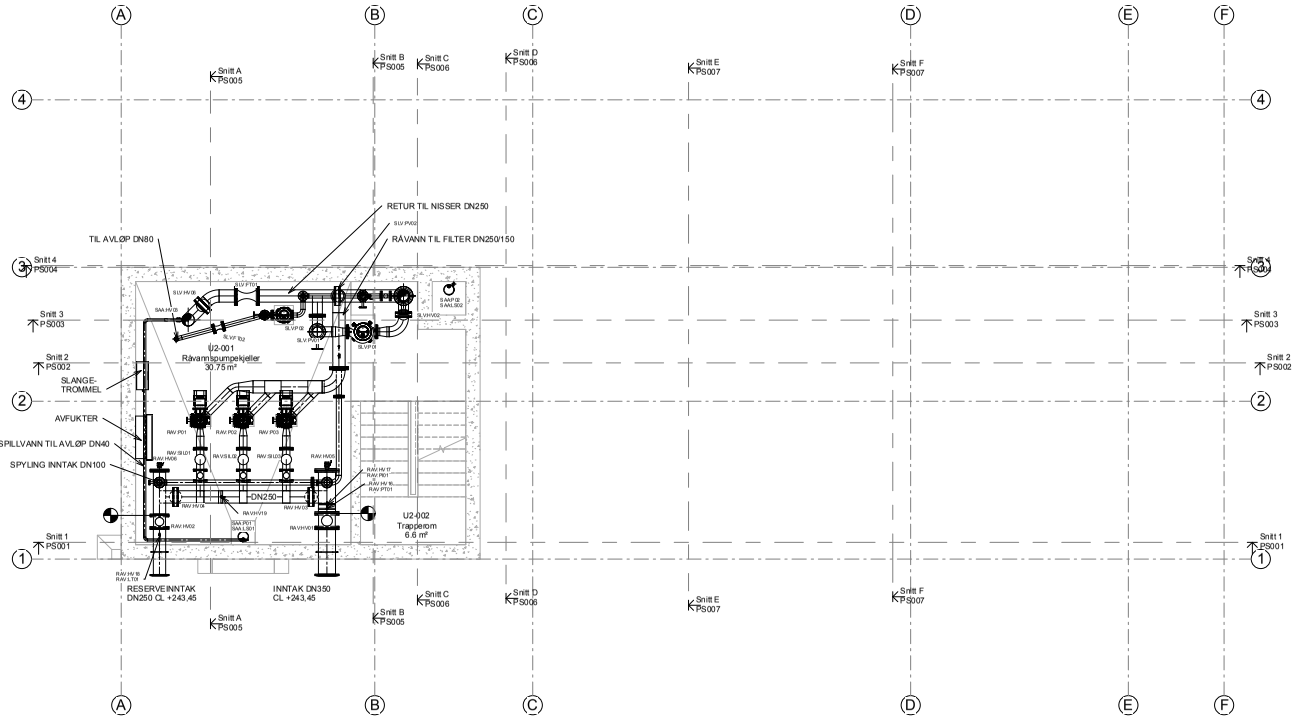

1 Nivå U2

1 : 50

Tegningsnummer:	Revisjon:
PPU2001	0A

Rev.	Tekst:	Rev.dato	Tegn.	Kontr.
0A-	TILBUDSTEGNING	2013-10-21		

TILBUDSTEGNINGER

asplan viak

Prosjekt:
Treungen vv

Oppdragsgiver:
Nissedal kommune

Plan U2

Prosessanlegg

Oppdragsleder:	Tegn:	Målestokk:
PHT	MM	1 : 50 (A1)
Oppdragsnr.:	Kontr:	Dato:
527056	PHT	2013-10-21

Tegn. nr:	Rev.
PPU2001	**0A**
Fag Type Etp Lopenr.	

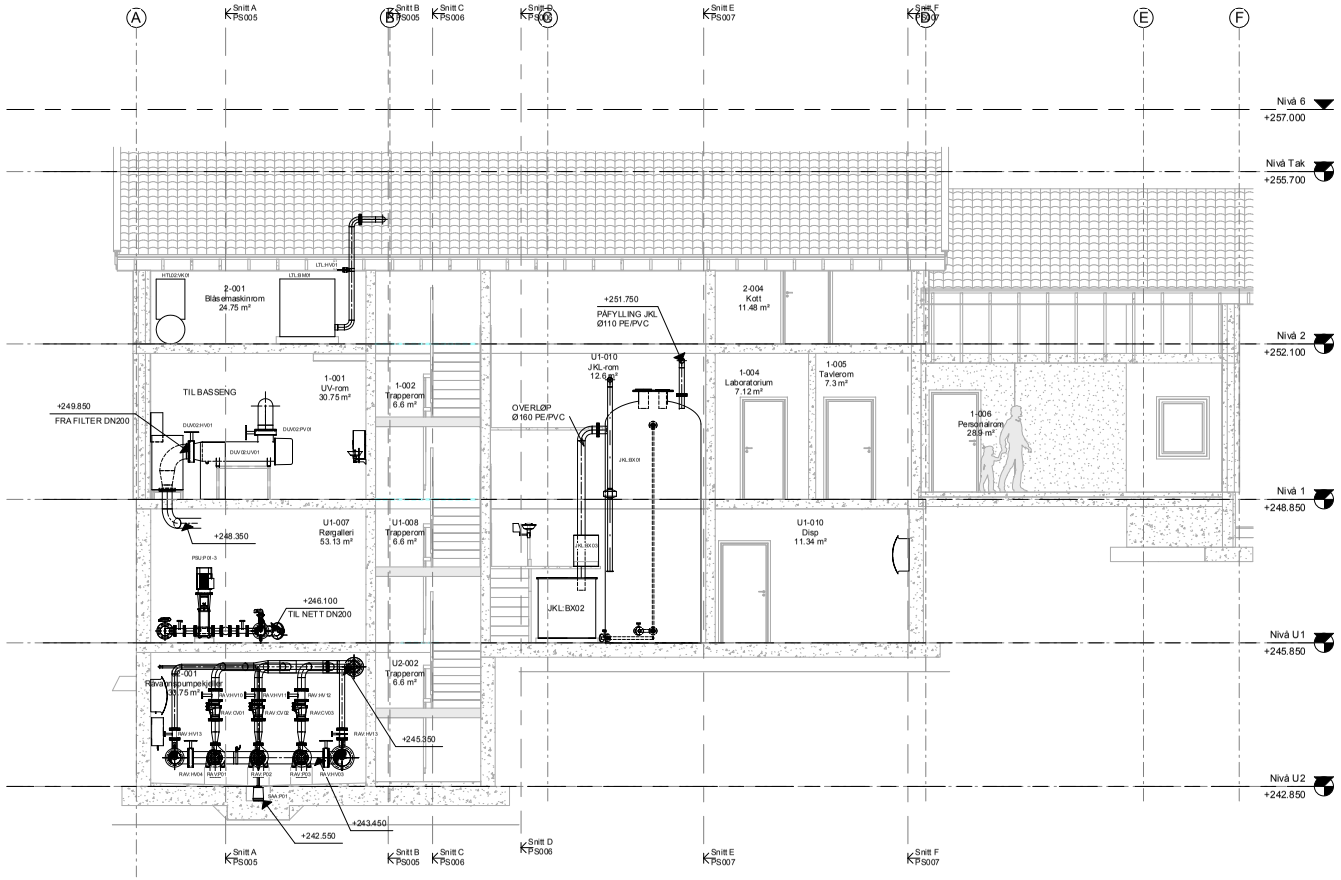

1 Snitt 1
1 : 50

Tegningsnummer: PS001 Revisjon: 0A

Rev.	Tekst:	Rev.dato	Tegn.	Kontr.
0A	TILBUDSTEGNING	2013-10-21		

TILBUDSTEGNINGER

asplan viak

Prosjekt: Treungen vv
Oppdragsnr.: Nissedal kommune

Snitt 1
Prosessanlegg

Oppdragsleder: PHT	Tegn: MM	Målestokk: 1 : 50 (A1)
Oppdragsnr.: 527056	Kontr: PHT	Dato: 2013-10-21

Tegn. nr. **PS001** Rev. **0A**

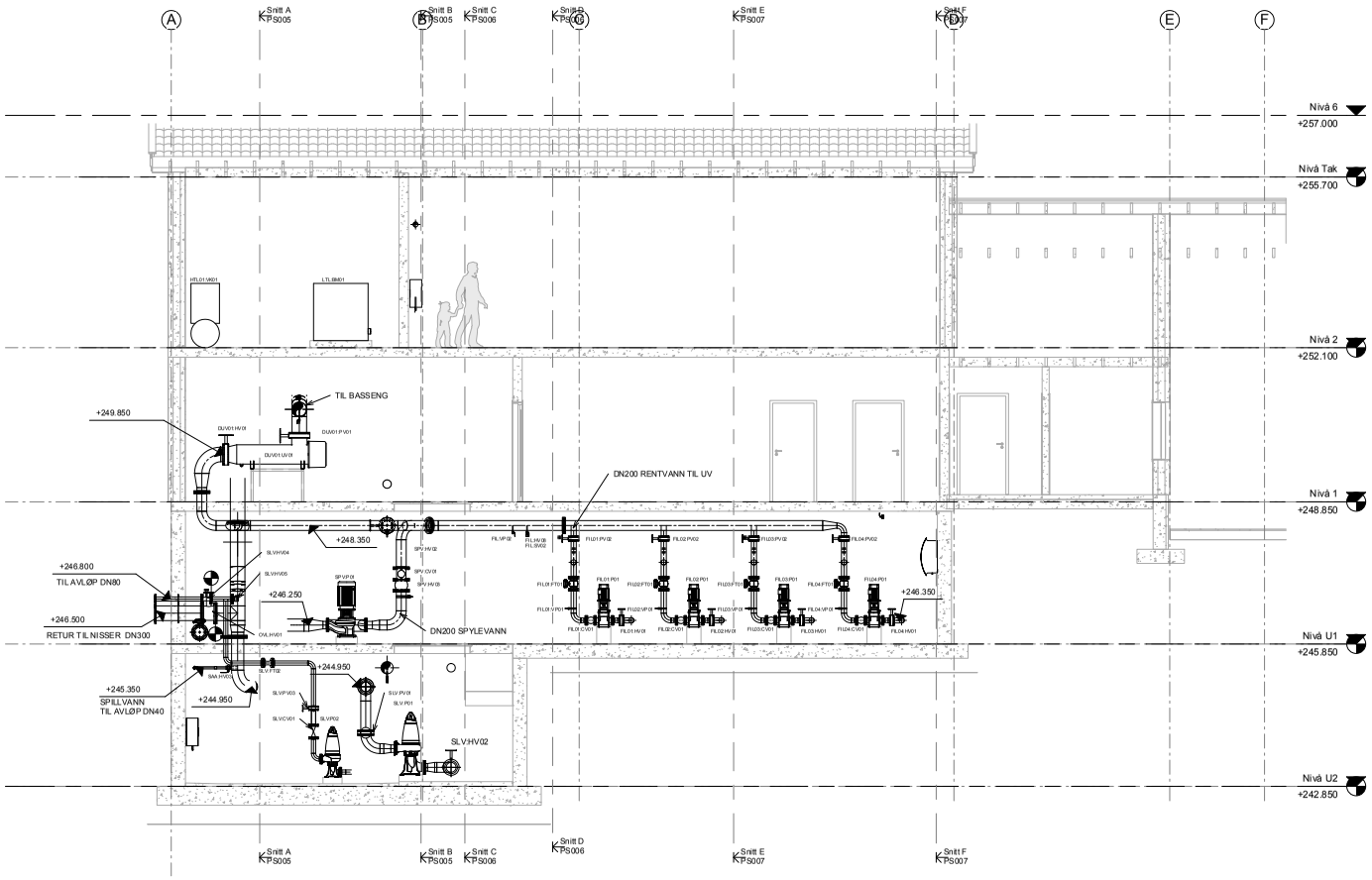

1 Snitt 2

1 : 50

Tegningsnummer: PS002	Revisjon: 0A

Rev.	Tekst:	Rev.dato	Tegn.	Kontr.
0A	TILBUDSTEGNING	2013-10-21		

TILBUDSTEGNINGER

asplan viak

Prosjekt:
Treungen vv

Oppdragsgiver:
Nissedal kommune

Snitt 2

Prosessanlegg

Oppdragsleder: PHT	Tegn: MM	Målestokk: 1 : 50 (A1)
Oppdragsnr: 527056	Kontr: PHT	Dato: 2013-10-21

Tegn. nr: **PS002** Rev: **0A**

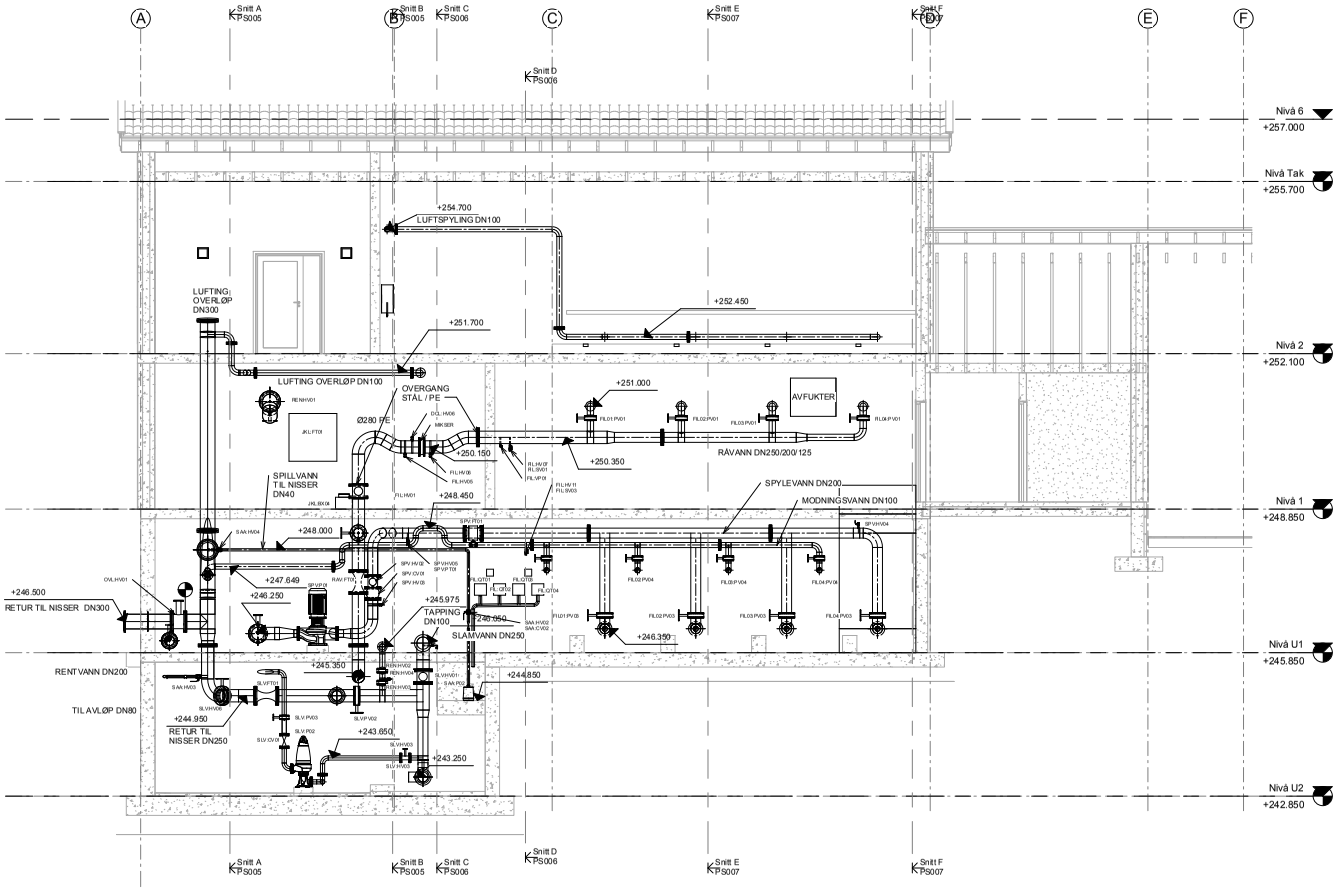

1 Snitt 3
1 : 50

Tegningsnummer: PS003 Revisjon: 0A

Rev.	Tekst:	Rev.dato	Tegn.	Kontr.
0A-	TILBUDSTEGNING	2013-10-21		

TILBUDSTEGNINGER

asplan viak

Prosjekt: Treungen vv
Oppdragsnr.: Nissedal kommune

Snitt 3
Prosessanlegg

Opprettet av: PHT	Tegn: MM	Målestokk: 1 : 50 (A1)
Oppdragsnr.: 527056	Kontr: PHT	Dato: 2013-10-21

Tegn. nr. **PS003** Rev. **0A**

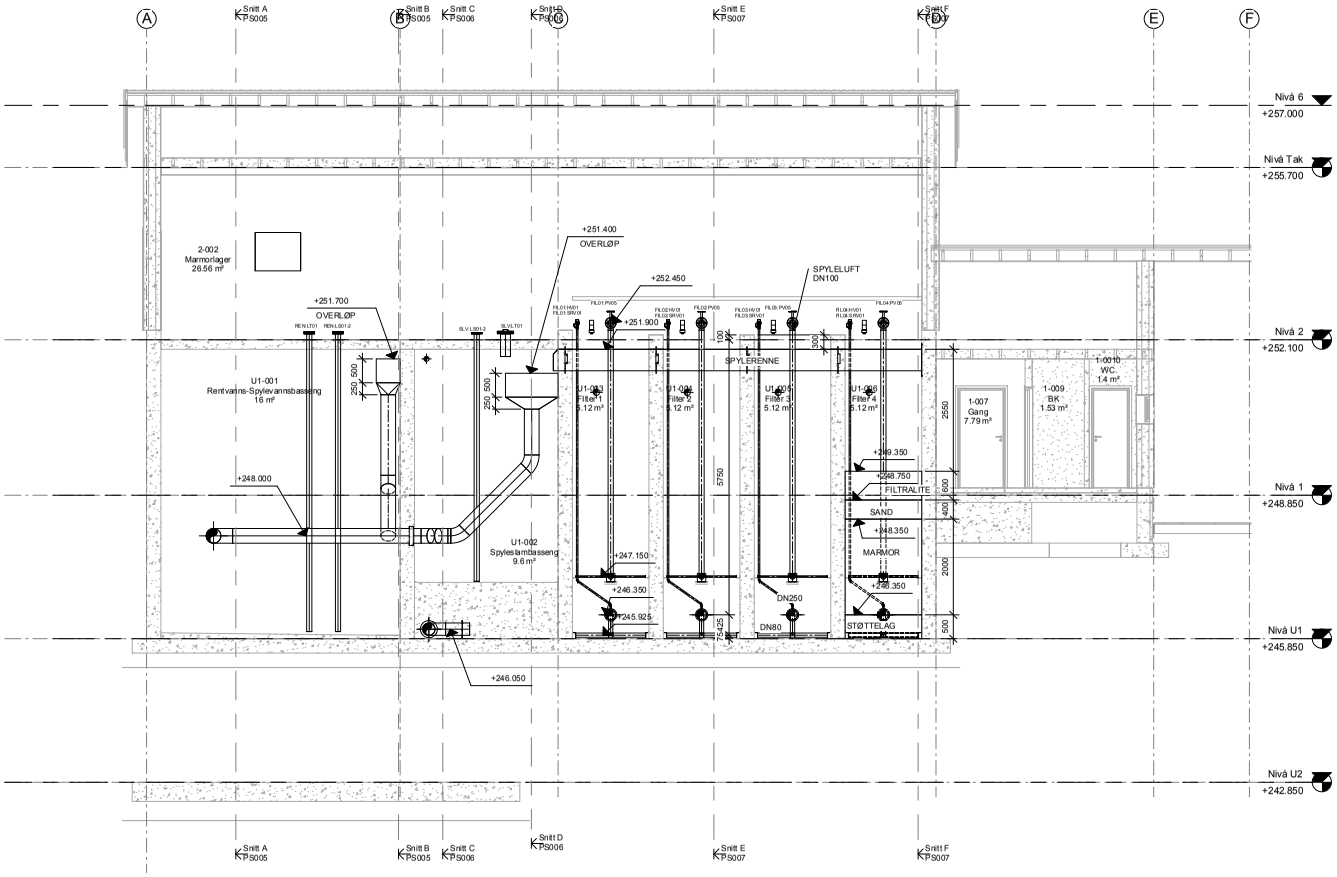

1 Snitt 4
1 : 50

Tegningsnummer: PS004
Revisjon: 0A

Rev.	Tekst	Rev.dato	Tegn.	Kontr.
0A	TILBUDSTEGNING	2013-10-21		

TILBUDSTEGNINGER

asplan viak

Prosjekt: Treungen vv
Oppdragsgiver: Nissedal kommune

Snitt 4
Prosessanlegg

Oppdragsleder: PHT	Tegn: MM	Målestokk: 1 : 50 (A1)
Oppdragsnr: 527056	Kontr: PHT	Dato: 2013-10-21

Tegn. nr: **PS004** Rev: **0A**

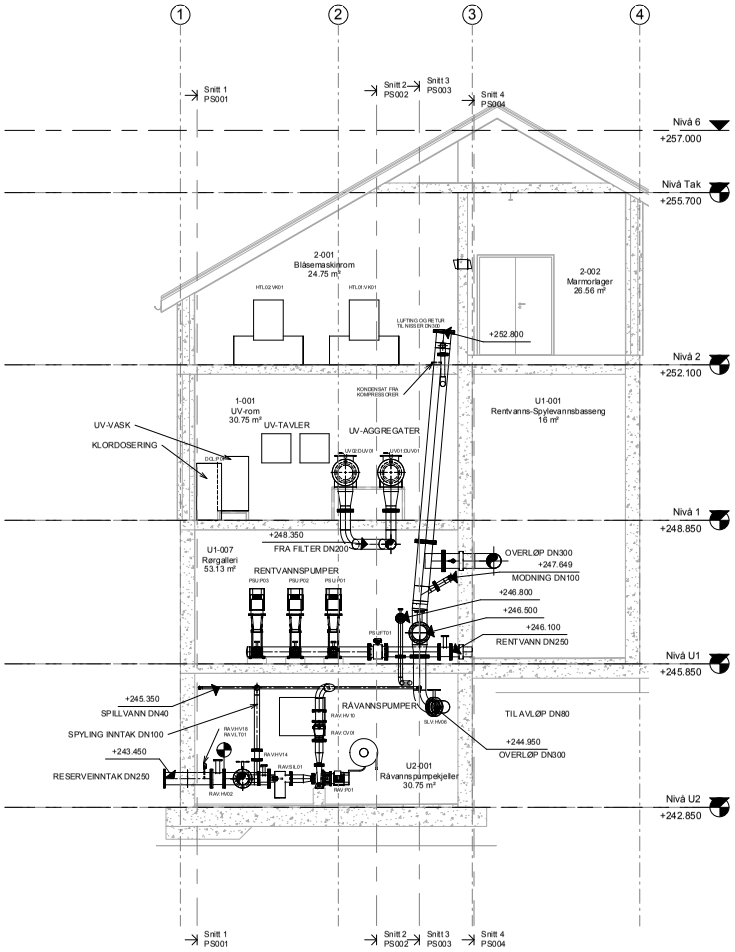

1 Snitt A
1 : 50

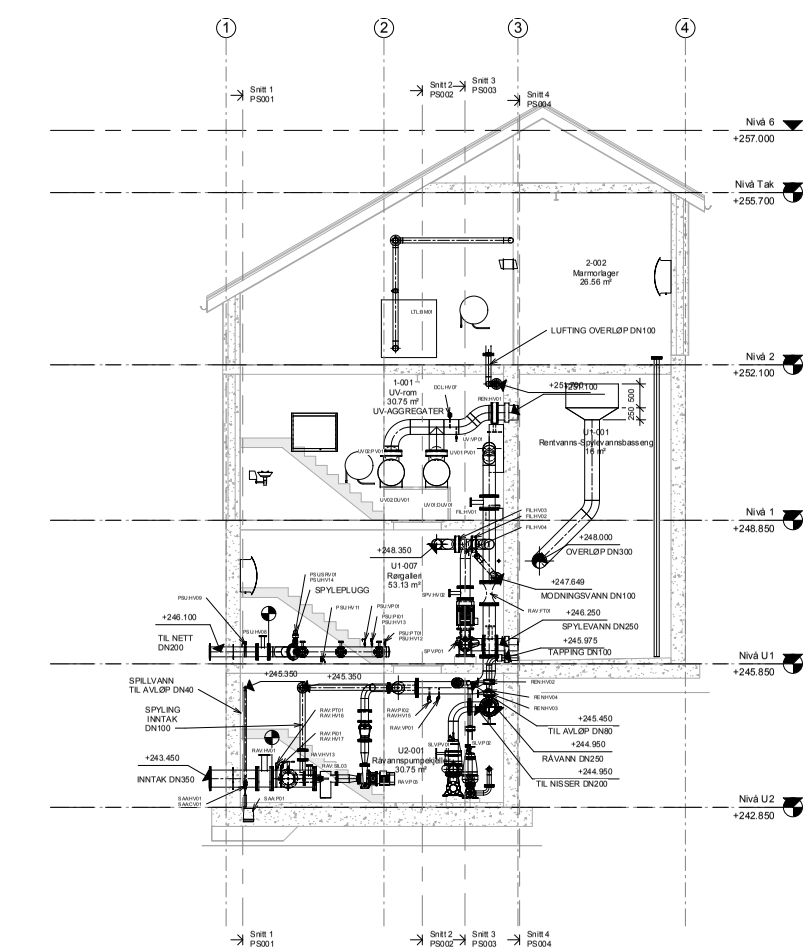

2 Snitt B
1 : 50

Tegningsnummer: **PS005**
Revisjon: **0A**

Rev.	Tekst:	Rev.dato	Tegn.	Kontr.
0A-	TILBUDSTEGNING	2013-10-21		

TILBUDSTEGNINGER

asplan viak

Prosjekt:
Treungen vv
Oppdragsnr.:
Nissedal kommune

Snitt A og B
Prosessanlegg

Oppdragsleder: PHT
Tegn: MM
Målestokk: 1 : 50 (A1)
Oppdragsnr.: 527056
Kontr: PHT
Dato: 2013-10-21

Tegn. nr.: **PS005**
Rev.: **0A**

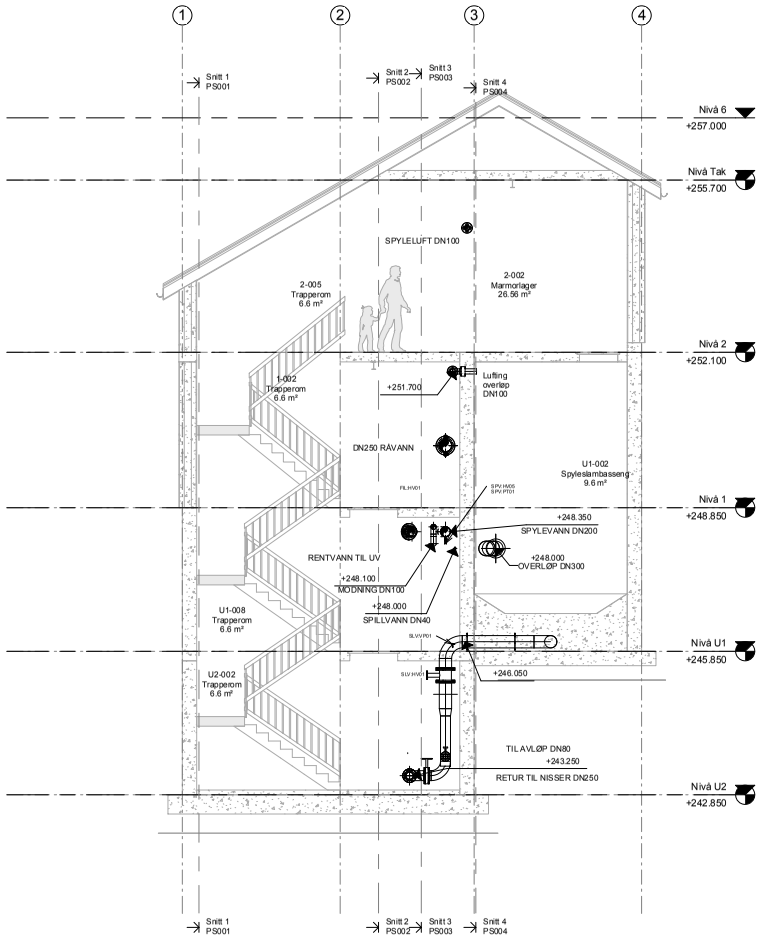

1 Snitt C
1 : 50

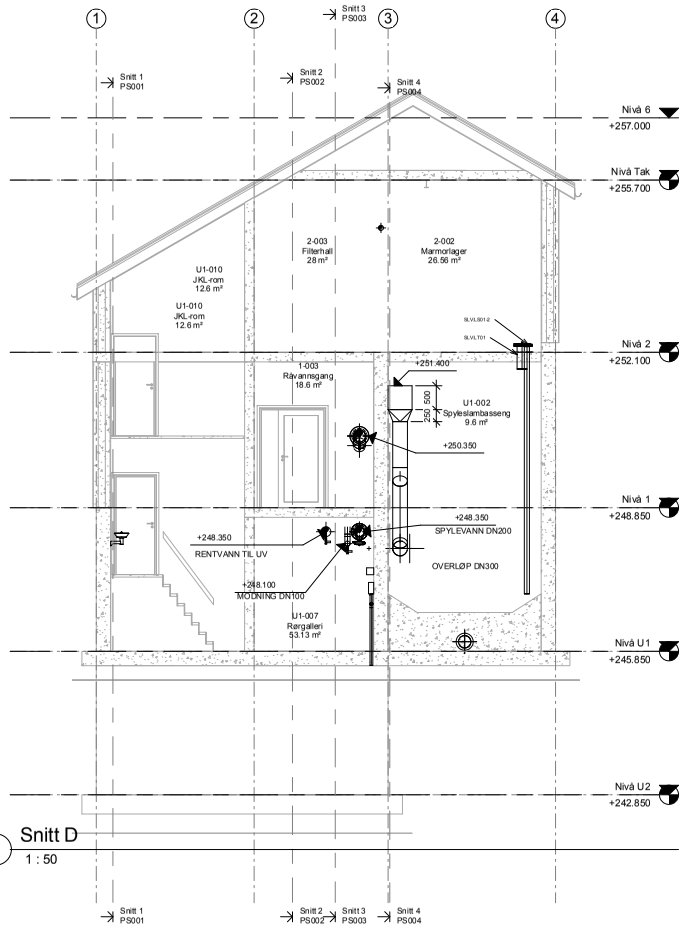

2 Snitt D
1 : 50

Tegningsnummer: PS006
Revisjon: 0A

Rev.	Tekst	Rev.dato	Tegn.	Kontr.
0A	TILBUDSTEGNING	2013-10-21		

TILBUDSTEGNINGER

asplan viak

Prosjekt: Treungen vv
Oppdragsgiver: Nissedal kommune

Snitt C og D
Prosessanlegg

Oppdragsleder: PHT	Tegn: MM	Målestokk: 1 : 50 (A1)
Oppdragsnr: 527056	Kontr: PHT	Dato: 2013-10-21

Tegn. nr. **PS006** Rev. **0A**

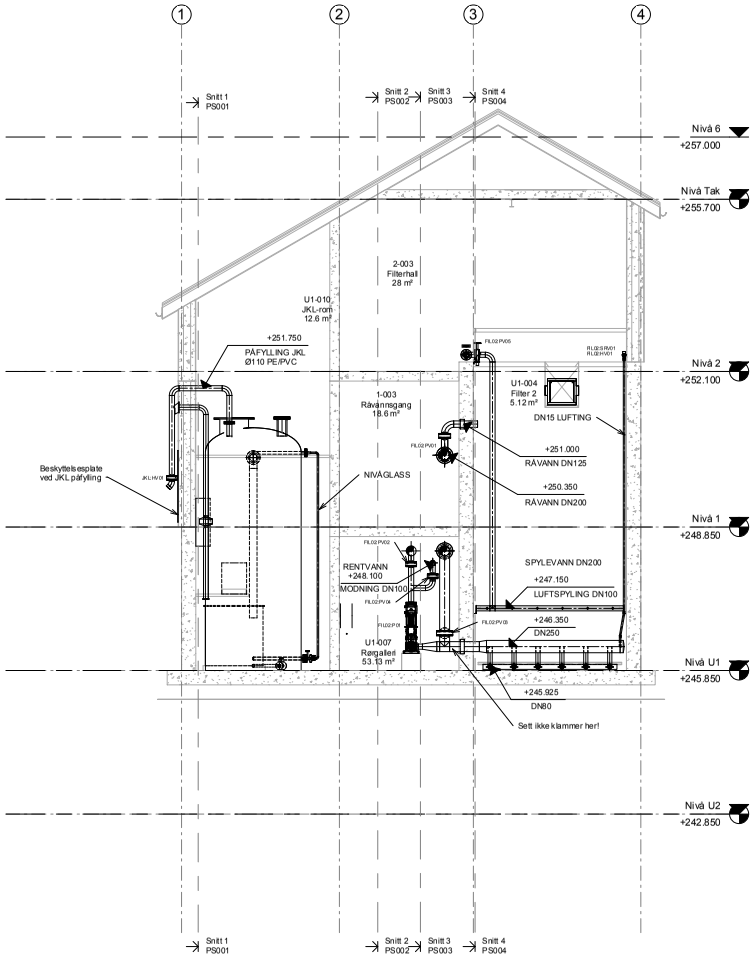

2 Snitt E
1 : 50

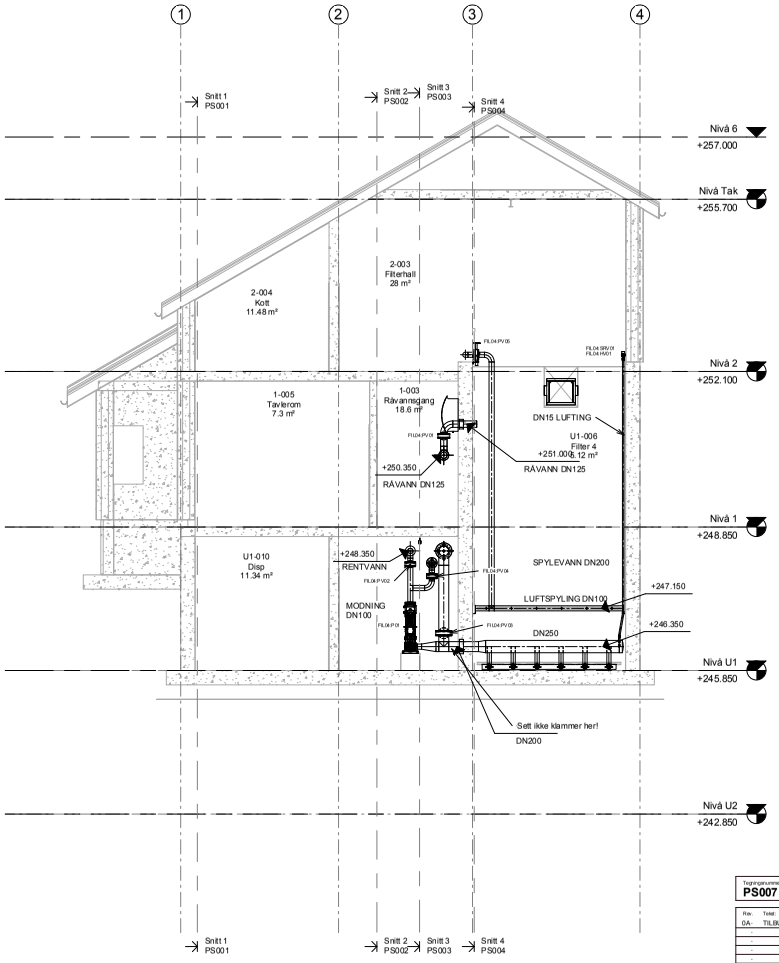

1 Snitt F
1 : 50

Tegningsnummer: PS007
Revisjon: 0A

Rev.	Tekst	Rev.dato	Tegn.	Kontr.
0A-	TILBUDSTEGNING	2013-10-21		

TILBUDSTEGNINGER

asplan viak

Prosjekt
Treungen vv
Oppdragsgiver
Nissedal kommune

Snitt E og F
Prosessanlegg

Oppdragsleder	Tegn	Målestokk
PHT	MM	1 : 50 (A1)
Oppdragsnr.	Kontr	Dato
527056	PHT	2013-10-21

Tegn. nr. **PS007** Rev. **0A**

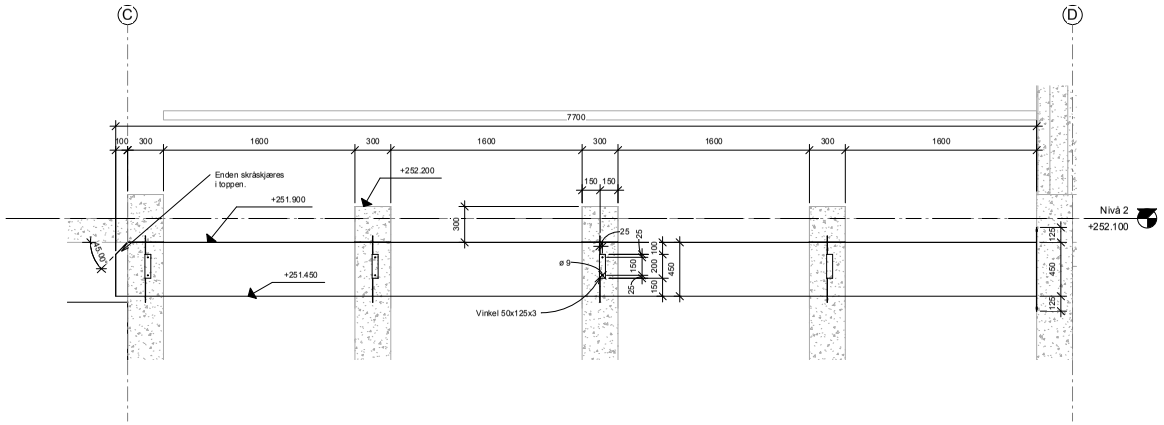

1 Lengdesnitt spylerenne
1 : 20

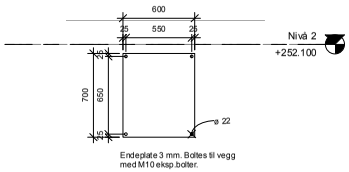

2 Endeplate spylerenne
1 : 20

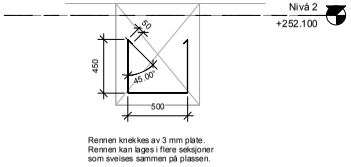

3 Tversnitt spylerenne
1 : 20

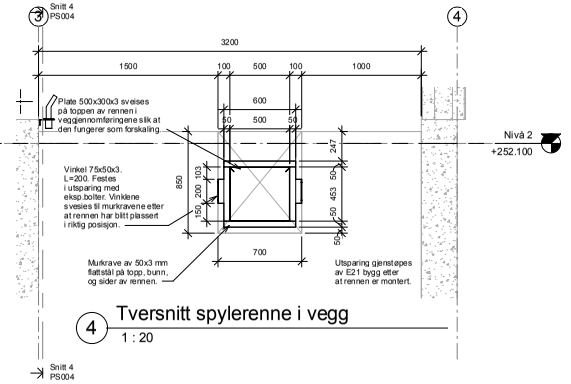

4 Tversnitt spylerenne i vegg
1 : 20

Materialkvalitet AISI 304/304 L eller bedre.
Skarpe kanter avrundes.

For å hindre at rennen forspennes på grunn av termisk utvidelse skal gjennstøping av rennen om mulig utføres ved en temperatur på mellom 5 og 10 grader celsius.

Tegningsnummer:	Revisjon:
PJ001	0A

Rev.	Tekst:	Rev.dato	Tegn.	Kontr.
0A	TILBUDSTEGNING	2013-10-21		

TILBUDSTEGNINGER

asplan viak

Prosjekt:
Treungen vv

Oppdragsgiver:
Nissedal kommune

Detalj Spylerenne

Oppdragsleder:	Tegn:	Målestokk:
PHT	MM	1 : 20 (A1)
Oppdragsnr:	Kontr:	Dato:
527056	PHT	2013-10-21

Tegn. nr: **PJ001** Rev: **0A**

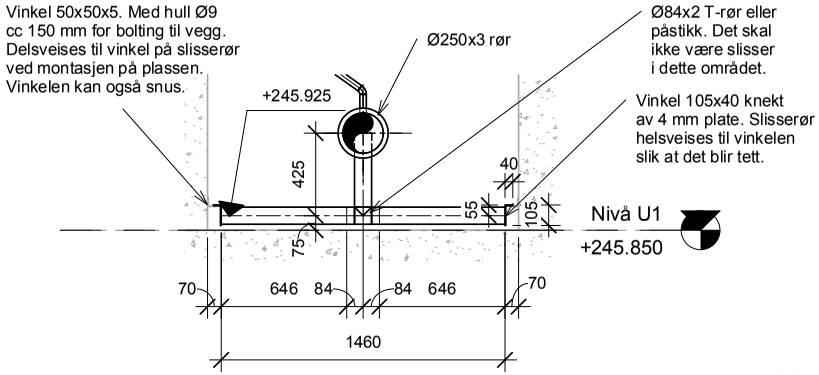

2 Snitt fordelingsrør vann

1 : 25

Materialkvalitet AISI 304/304 L eller bedre.
Det lages 4 rør av denne typen.
Alle mengder er spesifisert pr. rør.

Tag.	Spesifikasjon for slisserør Slissene skal LASER skjeres	Mengde:	Enh.:
A	Vinkel på slisse	90	grader
B	Bredde på slisse	1,5	mm
C	Senteravstand slisser OBS! Annenhver side	28	mm
D	Diameter slisserør	80	mm

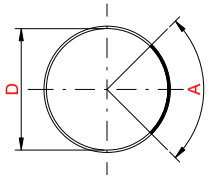

Snitt A–A
OBS! Ikke i målestokk

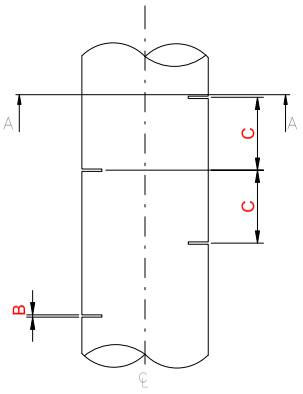

Detalj av slissemål.
Sett ovenfra OBS! Ikke i målestokk

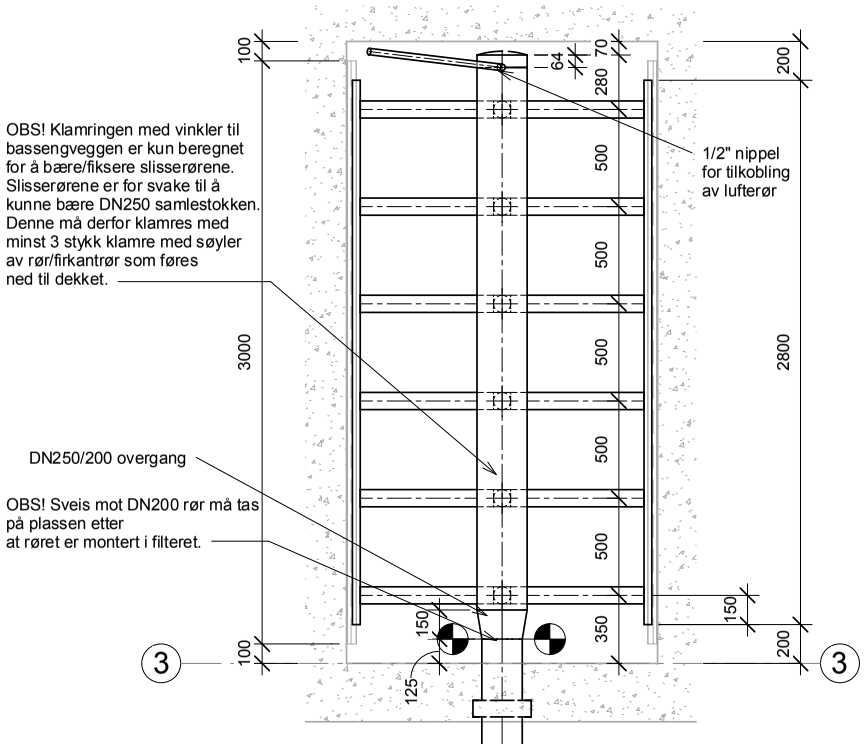

1 Plan fordelingsrør vann

1 : 25

Tegningsnummer: **PJ002**
Revisjon: **0A**

Rev.	Tekst:	Rev.dato:	Tegn:	Kontr:
0A-	TILBUDSTEGNING	2013-10-21		

TILBUDSTEGNINGER

asplan viak

Prosjekt:
Treungen vv
Oppdragsgiver:
Nissedal kommune

Detalj Fordelingsrør for vann

Oppdragsleder: PHT
Tegn: MM
Målestokk: 1 : 25 (A3)
Oppdragsnr.: 527056
Kontr: PHT
Dato: 2013-10-21

Tegn. nr: **PJ002**
Fag Type Etg. Løpenr.
Rev. **0A**

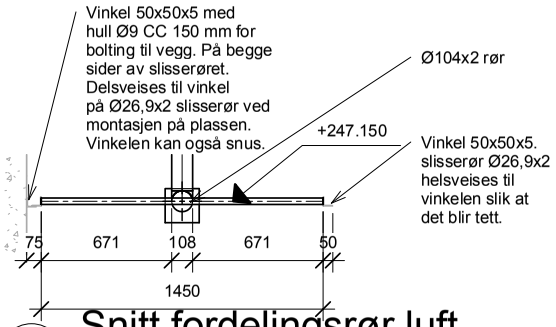

2 Snitt fordelingsrør luft

1 : 25

Materialkvalitet AISI 304/304 L eller bedre.
Det lages 4 rør av denne typen.
Alle mengder er spesifisert pr. rør.

Tag.	Spesifikasjon for slisserør Slissene skal LASER skjeres	Mengde:	Enh.:
A	Vinkel på slisse	60	grader
B	Bredde på slisse	0,2	mm
C	Senteravstand slisser OBS! Annenhver side	35	mm
D	Diameter slisserør	Ø26,9x2	mm

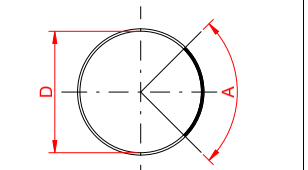

Snitt A–A
OBS! Ikke i målestokk

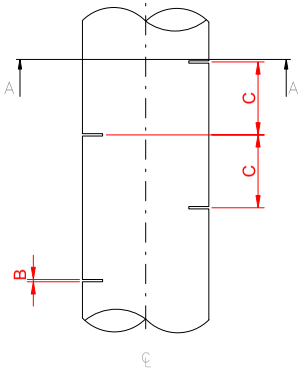

Detalj av slissemål.
Sett ovenfra OBS! Ikke i målestokk

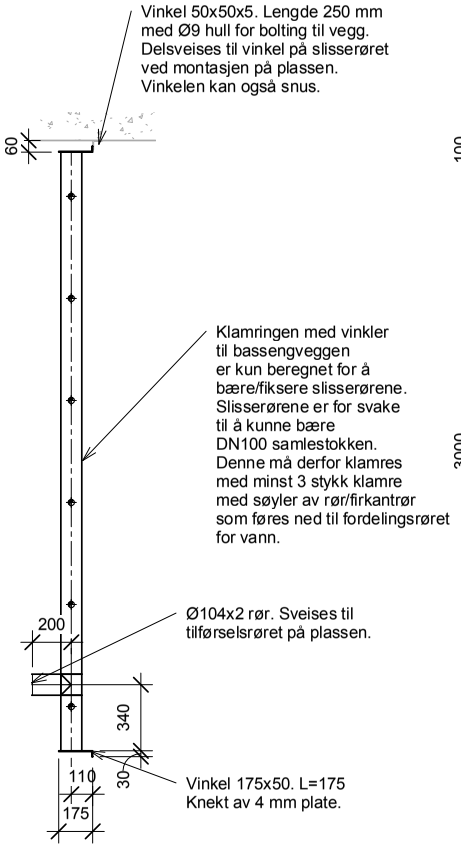

3 Lengdesnitt fordelingsrør luft

1 : 25

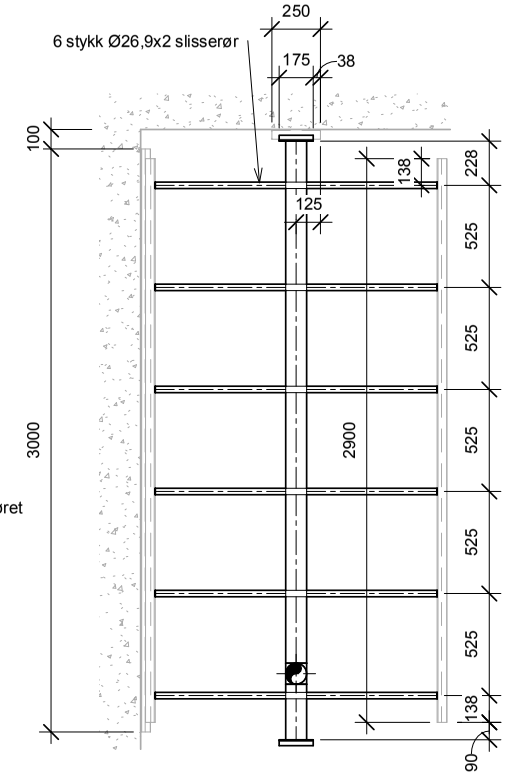

Tegningsnummer: **PJ003**
Revisjon: **0A**

Rev.	Tekst:	Rev.dato:	Tegn:	Kontr:
0A-	TILBUDSTEGNING	2013-10-21		

TILBUDSTEGNINGER

asplan viak

Prosjekt:
Treungen vv
Oppdragsgiver:
Nissedal kommune

Detalj Fordelingsrør luft

Oppdragsleder: PHT	Tegn: MM	Målestokk 1 : 25 (A3)
Oppdragsnr.: 527056	Kontr: PHT	Dato: 2013-10-21

Tegn. nr: **PJ003** (Fag Type Etg. Løpenr.)
Rev. **0A**

Tørr side

Våt side

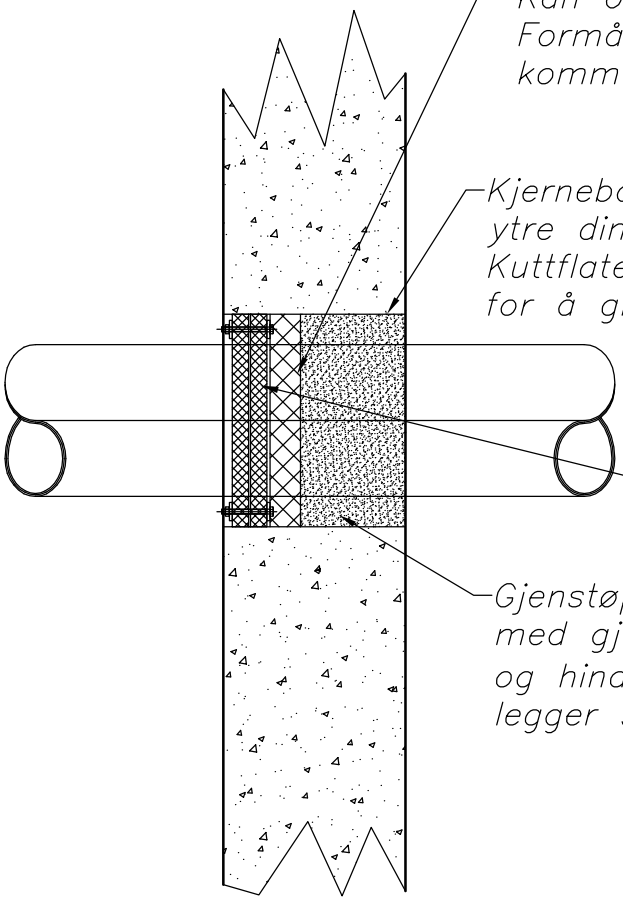

Ring utskåret av 50 mm ispor. Kan også utføres med steinull. Formålet er å hindre at betong kommer i kontakt med Doyma tetningen.

Kjerneboring med diameter tilpasset ytre dimensjon på Doyma. Kuttflatene forsegles med epoksy for å gi en glatt og tett overflate.

Doyma Type C med dobbelt tetningsbelg. Doyma og rør leveres og monteres av E61.

Gjenstøping med betong. Formålet med gjenstøpingen er å avstive røret og hindre at slam/filtermateriale legger seg i åpningen.

Pipe/Cable external diameter d [mm]	Pipe sleeve/ core bore D_1 [NB in mm]
1 - 24	50*
1 - 40	80
41 - 57	100
58 - 77	125
78 - 104	150
105 - 145	200
146 - 190	250
191 - 233	300
234 - 288	350
289 - 339	400
340 - 380	450
381 - 430	500
431 - 530	600
531 - 620	700
L_D (max. overall length) [mm]: 85	

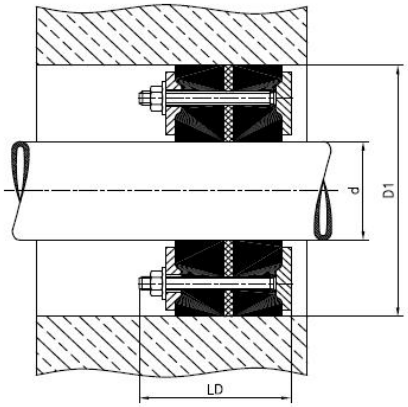

Rev.	Tekst:	Rev.dato:	Kontr:
-			
-			
-			
-			
-			
-			
-			
-			

TILBUDSTEGNING

asplan viak

Prosjekt:
Treungen VBA

Oppdragsgiver:
Nissedal kommune

Detalj av rørgjennomføring

med Doyma tetning

Oppdragsleder:	Tegn:	Målestokk
PHT	MM	-
Oppdragsnr.:	Kontr:	Dato:
527056	MM	2013-10-21

Tegn. nr:

B J (Fag Type) **001** (Etg. Løpenr.)

Rev.

01-A

Appendix B:

Moody Diagram

MOODY DIAGRAM

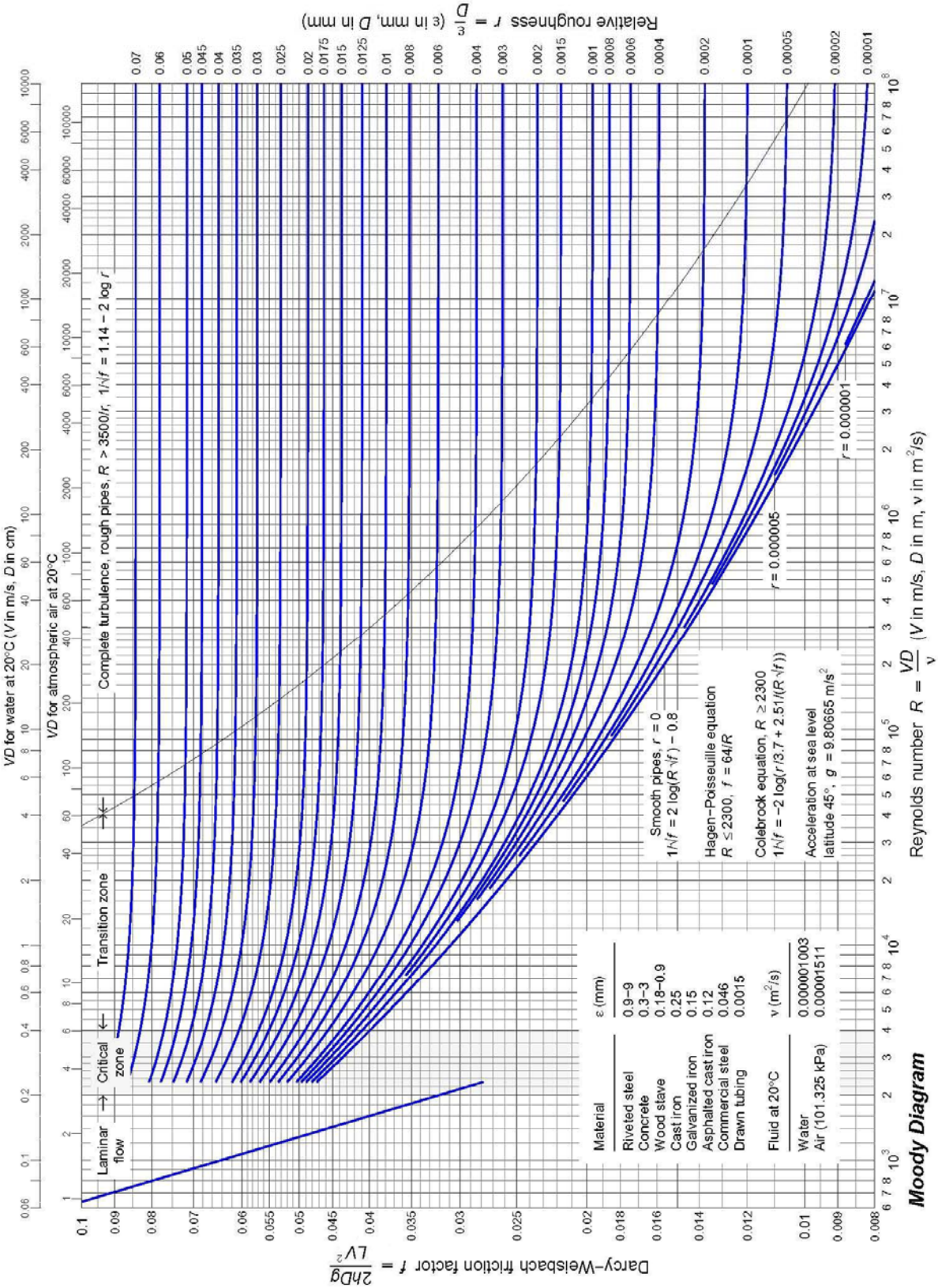

Friction factors for any type and size of pipe. (From Pipe Friction Manual, 3rd ed., Hydraulic Institute, New York, 1961)

Appendix C:

Colebrook Diagram

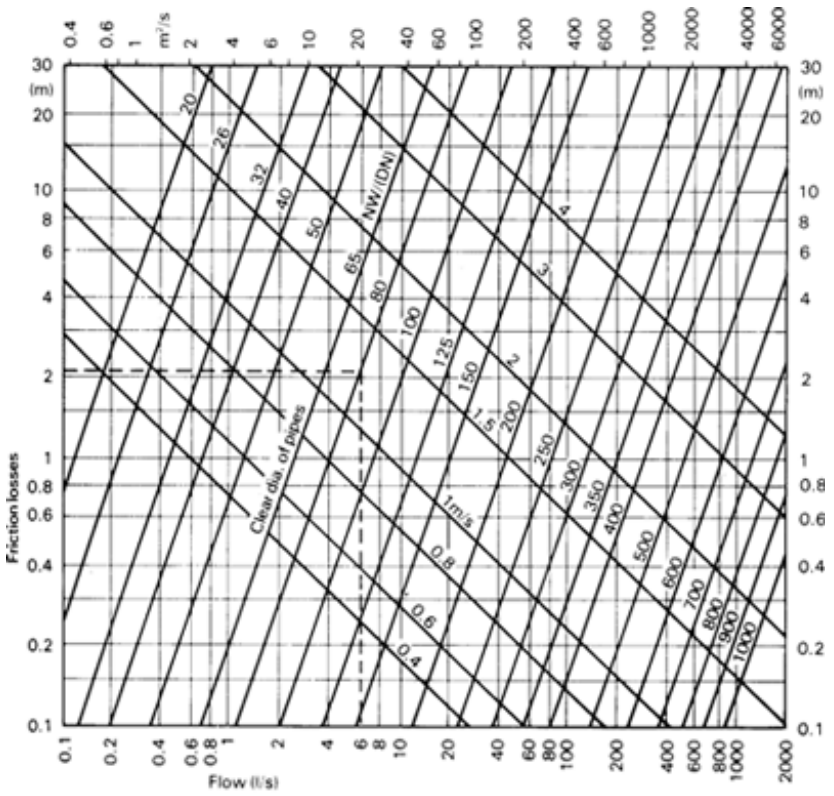

Friction losses in metres per 100m for a new pipeline of cast iron

For other types of pipe multiply the friction loss as indicated by the table by the factors given below:

New Rolled steel	–	0.8
New plastic	–	0.8
Old rusty cast iron	–	1.25
Pipes with encrustations	–	1.7

Appendix D:

Examples of Singular Loss Coefficients

Values Provided By Engineeringtoolbox.com	
Tee, Flanged, Dividing Line Flow	0,2
Tee, Threaded, Dividing Line Flow	0,9
Tee, Flanged, Dividing Branched Flow	1
Tee, Threaded , Dividing Branch Flow	2
Union, Threaded	0,08
Elbow, Flanged Regular 90°	0,3
Elbow, Threaded Regular 90°	1,5
Elbow, Threaded Regular 45°	0,4
Elbow, Flanged Long Radius 90°	0,2
Elbow, Threaded Long Radius 90°	0,7
Elbow, Flanged Long Radius 45°	0,2
Return Bend, Flanged 180°	0,2
Return Bend, Threaded 180°	1,5
Globe Valve, Fully Open	10
Angle Valve, Fully Open	2
Gate Valve, Fully Open	0,15
Gate Valve, 1/4 Closed	0,26
Gate Valve, 1/2 Closed	2,1
Gate Valve, 3/4 Closed	17
Swing Check Valve, Forward Flow	2
Ball Valve, Fully Open	0,05
Ball Valve, 1/3 Closed	5,5
Ball Valve, 2/3 Closed	200
Diaphragm Valve, Open	2,3
Diaphragm Valve, Half Open	4,3
Diaphragm Valve, 1/4 Open	21
Water meter	7

Values from wikiengineer.com, reference: Larock, Jeppson, & Watters, "Hydraulics of Pipeline Systems", 2000	
Globe valve (fully open)	6,4
Globe valve (half open)	9,5
Angle valve (fully open)	5,0
Swing check valve (fully open)	2,5
Butterfly valve (fully open)	0,4
Gate valve (fully open)	0,2
Gate valve (3/4 open)	1,0
Gate valve (half open)	5,6
Gate valve (one-quarter open)	24,0
Check valve, swing type (fully open)	2,3
Check valve, lift type (fully open)	12,0
Check valve, ball type (fully open)	70,0
Foot Valve (fully open)	15,0
Close return bend (180°)	2,2
Standard tee	1,8
Standard (short radius) elbow (90°)	0,9
Medium radius elbow (90°)	0,7
Long sweep elbow (90°)	0,6
45 degree elbow	0,4
Pipe entrance (Square-edged)	0,5
Pipe entrance (Re-entrant)	0,8
Pipe entrance (Rounded, r/D < 0.16)	0,1
Pipe exit	1,0
Sudden contraction (2 to 1)	0,3
Sudden contraction (5 to 1)	0,4
Sudden contraction (10 to 1)	0,5
Orifice plate (1.5 to 1)	0,9
Orifice plate (2 to 1)	3,4
Orifice plate (4 to 1)	29,0
Sudden enlargement	$(1-A_1/A_2)^2$
90 degree miter bend (without vanes)	1,1
90 degree miter bend (with vanes)	0,2
General contraction (30 degree included angle)	0,02
General contraction (70 degree included angle)	0,07

Appendix E:

Example Check Valve Diagram

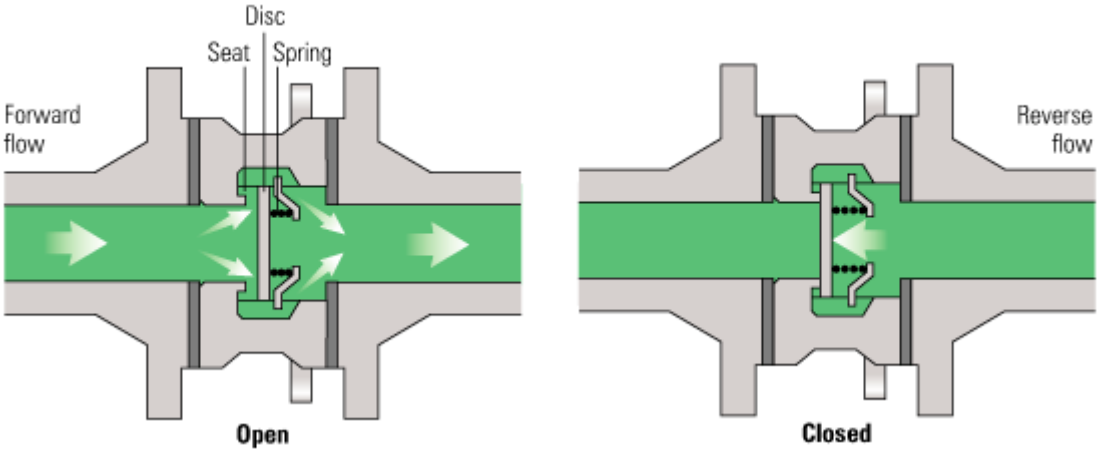
Disc
Seat
Spring
Forward flow
Reverse flow
Open
Closed

Appendix F:

Pre Intake Pump Filter Diagram

Simplex Basket Strainer

Model 72

Pipeline Strainer

Cast Construction

Permanent Media

- Sizes 3/8" to 8"
- Iron, bronze, carbon steel or stainless steel
- Threaded or flanged

Features

- Quick open cover—no tools needed
- Heavy wall construction
- Large capacity baskets
- Machined basket seat
- Threaded drain
- Mounting feet for stable installation for flanged units 2" and larger
- Perforated or mesh 316 stainless steel basket
- American Bureau of Shipping (ABS) Type Approved for ship designers, builders and owners

Options

- Basket perforations from 1/32" to 1/2"
- Basket mesh from 20 to 400
- MONEL® baskets
- Viton®, PTFE encapsulated or EPDM seals
- Vent valves
- Gauge/vent taps - 1/4" NPT
- Magnetic basket inserts
- Pressure differential gauge and switch
- Flange according to DIN EN

MONEL® is a registered trademark of Special Metals Corporation group of Companies.
Viton® is a registered trademark of E. I. du Pont de Nemours and company.

The Eaton Model 72 has been the industry standard simplex basket strainer for more than 75 years. It is perfect for industrial and commercial applications in which the line can be temporarily shut down for strainer basket cleaning or changeout.

A reason for its popularity is the unusually large basket capacity. The free straining area with a perforated basket is a minimum of six times the cross sectional pipe area. No tools are needed to open the cover. The quick opening, swinging yoke can be disassembled and the basket removed in seconds. On sizes 4" and larger, a special cover clamp is provided to distribute the seating pressure and to ensure positive seating of the cover.

Another feature is a threaded drain on every size strainer (fitted with a yoke quick-closer). Sizes 2" and larger are equipped with legs that bolt to the floor for rock solid installation.

Wall thicknesses are exceptionally heavy. The basket seats are precision machined to give a tight seal and prevent any material from bypassing the basket. The Eaton Model 72 simplex basket strainer is a top quality, heavy-duty unit designed to stand up to the most demanding of applications.

Model 72 simplex

Size	Material	End connection	Seals	Pressure rating*
3/8" to 3"	Iron and bronze	Threaded	Buna-N®	200 psi (13.8 bar)
1" To 3"	Carbon steel	Threaded	Buna-N	200 psi (13.8 bar)
1" To 3"	Stainless steel	Threaded	Viton	200 psi (13.8 bar)
1" To 8"	Iron	Flanged 125#	Buna-N	200 psi (13.8 bar)
1" To 8"	Bronze	Flanged 150#	Buna-N	200 psi (13.8 bar)
1" To 8"	Carbon steel	Flanged 150#	Buna-N	200 psi (13.8 bar)
1" To 8"	Stainless steel	Flanged 150#	Viton	200 psi (13.8 bar)

* @ 100 ° F (38 °C)

Powering Business Worldwide

Model 72 Simplex Basket Strainer

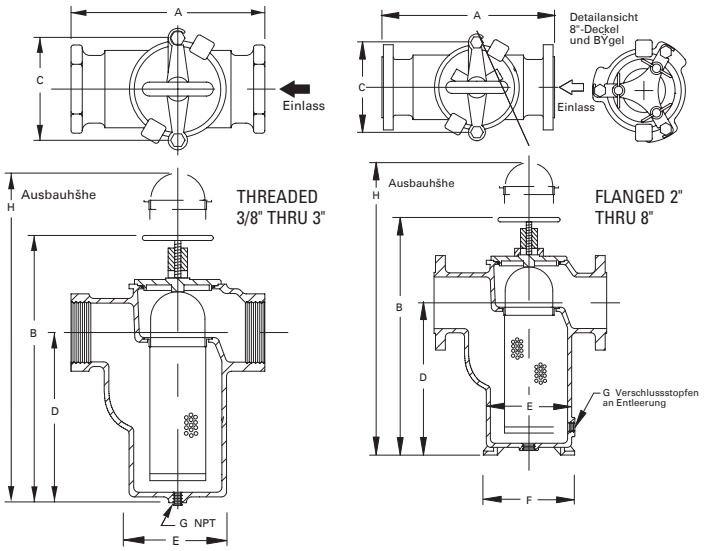

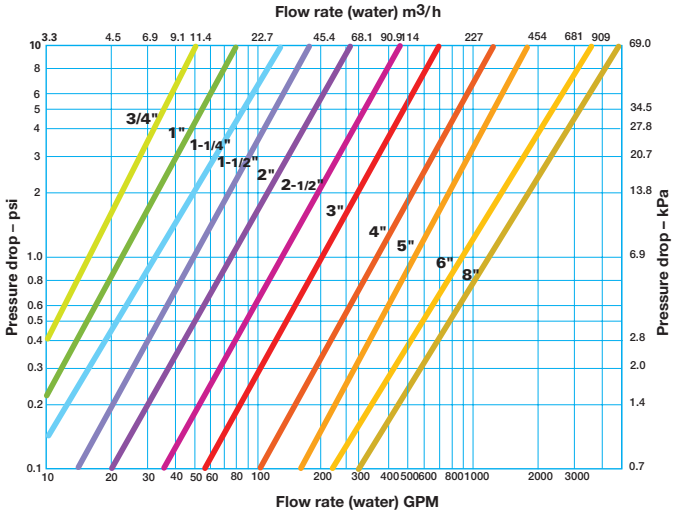

Threaded Model 72 dimensions (in/mm)

Dimensions and weights are for reference only. Contact Eaton for certified drawings.

Size	A	B	C	D	E	F	G	H	Net Wt (lb / kg) Bronze	Carbon Steel	Iron	Stainless Steel
3/8	4.00 / 102	6.63 / 168	2.88 / 73	4.00 / 102	2.38 / 60	–	3/8	11 / 279	4 / 1.8	–	4 / 1.8	–
1/2	4.00 / 102	6.63 / 168	2.88 / 73	4.00 / 102	2.38 / 60	–	3/8	11 / 279	4 / 1.8	–	4 / 1.8	–
3/4	5.38 / 137	8.38 / 213	4.00 / 102	5.00 / 127	3.06 / 78	–	1/2	13 / 330	8 / 3.6	–	7 / 3.2	–
1	5.38 / 137	8.38 / 213	4.00 / 102	5.00 / 127	3.06 / 78	–	1/2	13 / 330	8 / 3.6	7 / 3.2	7 / 3.2	7 / 3.2
1-1/4	6.75 / 172	9.88 / 251	4.88 / 124	5.88 / 149	3.88 / 99	–	1/2	14 / 356	13 / 6	–	12 / 6	–
1-1/2	7.25 / 184	11.00 / 279	4.88 / 124	7.00 / 178	4.00 / 102	–	3/4	16 / 406	16 / 7	15 / 7	15 / 7	16 / 7.3
2	8.75 / 222	13.38 / 340	6.75 / 172	7.63 / 194	5.13 / 130	–	1-1/4	21 / 533	32 / 15	36 / 16	28 / 13	31 / 14
2-1/2	10.38 / 264	14.88 / 378	8.00 / 203	8.63 / 219	6.38 / 162	–	1-1/2	26 / 660	49 / 22	52 / 24	42 / 19	51 / 23
3	11.50 / 292	17.75 / 468	8.00 / 203	11.38 / 298	6.63 / 168	–	1-1/2	28 / 711	60 / 27	60 / 27	52 / 23	60 / 27

Mod. 72 C_V factors*

Size	Value	Size	Value
3/8"	15.0	2"	73
1/2"	15.0	2-1/2"	125
3/4"	15.0	3"	180
1"	22.5	4"	350
1-1/4"	31.5	6"	900
1-1/2"	46.0	8"	1400

* For water with clean, perforated basket

Flanged Model 72 dimensions (in/mm)

Dimensions and weights are for reference only. Contact Eaton for certified drawings.

Size	A	B	C	D	E	F	G	H	Net Wt (lb / kg) Carbon Bronze	Steel	Stainless Iron	Steel
1	7.63 / 194	8.38 / 213	4.00 / 102	5.00 / 127	–	–	1/2	13.00 / 330	16 / 7	9 / 4	9 / 4	9 / 4
1 1/2	10.25 / 260	11.00 / 279	4.88 / 124	7.00 / 178	–	–	3/4	16.00 / 406	30 / 14	17 / 7.7	17 / 7.7	17 / 7.7
2	10.50 / 268	13.75 / 349	6.75 / 172	7.63 / 194	5.13 / 130	6.25 / 159	3/8	20.00 / 508	49 / 22.3	36 / 16	36.5 / 17	36 / 16
2 1/2	11.63 / 295	15.63 / 397	8.00 / 203	8.88 / 226	6.38 / 162	7.63 / 194	3/8	23.00 / 584	64 / 29.1	63 / 27	54 / 25	63 / 29
3	13.13 / 334	18.00 / 457	8.00 / 203	10.63 / 270	6.50 / 165	8.00 / 203	3/8	27.00 / 686	85 / 38.6	–	76 / 35	–
3	13.13 / 334	18.75 / 476	7.94 / 202	12.00 / 305	6.50 / 165	8.00 / 203	1/2	27.00 / 686	–	86 / 39	–	86 / 39
4	16.75 / 425	19.88 / 505	10.75 / 273	10.75 / 273	9.63 / 245	11.38 / 289	1/2	30.00 / 762	140 / 63.6	–	125 / 55	–
4	17.25 / 438	19.88 / 505	10.69 / 272	10.69 / 272	9.25 / 235	11.38 / 289	1/2	30.00 / 762	–	130 / 59	–	130 / 59
5	18.13 / 461	25.13 / 638	10.75 / 273	15.25 / 387	10.00 / 254	11.38 / 289	1/2	41.00 / 1,041	182 / 82.7	–	170 / 775	–
6	19.63 / 499	28.50 / 724	10.69 / 272	18.38 / 467	10.00 / 254	11.38 / 289	1/2	46.00 / 1,168	270 / 122.7	235 / 107	200 / 91	235 / 107
8	27.00 / 686	40.50 / 1,029	–	27.00 / 686	13.75 / 349	17.50 / 445	1/2	60.00 / 1,524	600 / 272.7	550 / 250	500 / 227	550 / 250

North America
44 Apple Street
Tinton Falls, NJ 07724
Toll Free: 800 656-3344
(North America only)
Tel: +1 732 212-4700

Europe/Africa/Middle East
Auf der Heide 2
53947 Nettersheim, Germany
Tel: +49 2486 809-0

Internormen Product Line
Friedensstraße 41
68804 Altlußheim, Germany
Tel: +49 6205 2094-0

Begerow Product Line
An den Nahewiesen 24
55450 Langenlonsheim, Germany
Tel: +49 6704 204-0

China
No. 3, Lane 280,
Linhong Road
Changning District, 200335
Shanghai, P.R. China
Tel: +86 21 5200-0099

Singapore
4 Loyang Lane #04-01/02
Singapore 508914
Tel: +65 6825-1668

Brazil
Av. Julia Gaioli, 474 – Bonsucesso
07251-500 – Guarulhos, Brazil
Tel: +55 11 2465-8822

For more information, please email us at *filtration@eaton.com* **or visit** *www.eaton.com/filtration*

US
EF-SSEA-5
7-2015

© 2015 Eaton. All rights reserved. All trademarks and registered trademarks are the property of their respective owners. All information and recommendations appearing in this brochure concerning the use of products described herein are based on tests believed to be reliable. However, it is the user's responsibility to determine the suitability for his own use of such products. Since the actual use by others is beyond our control, no guarantee, expressed or implied, is made by Eaton as to the effects of such use or the results to be obtained. Eaton assumes no liability arising out of the use by others of such products. Nor is the information herein to be construed as absolutely complete, since additional information may be necessary or desirable when particular or exceptional conditions or circumstances exist or because of applicable laws or government regulations.

Powering Business Worldwide

Appendix G:

Measured Pressure Loss Through Filter, Pre/Under/Post Ripening

Test	Time	Operation duration	Volume Cleaned	Flow (l/s)	Flow (m3/s)	Velocity (m/s)	Test	Velocity (m/h)	Hz	Power (kW)
Before Backwash	June 27th						Before Backwash			
Test #1	12:57	72,3		2,98	0,00298	0,000582031	Test #1	2,0953125	17,4	0,19406
Test #2	13:08	72,5	194	5,99	0,00599	0,001169922	Test #2	4,21171875	24,1	0,41046
Ripening	14:18						Ripening			
Test #1	14:26			6,05	0,00605	0,001181641	Test #1	4,25390625	11,8	0,23664
Test #2	14:46			5,97	0,00597	0,001166016	Test #2	4,19765625	11,9	0,23351
Test #3	15:05			5,98	0,00598	0,001167969	Test #3	4,2046875	12	0,2339
After Ripening							After Ripening			
Test #1	15:29	0,1		2,88	0,00288	0,0005625	Test #1	2,025	13,8	0,18323
Test #2	15:48			5,93	0,00593	0,001158203	Test #2	4,16953125	21,3	0,40694

Filter Parameters				
	Elev			Height at Overflow
Overflow at	251,9		Filter 4	3,72
Empty	248,18			

P1 (bar)	P2 (bar)	P1 (m)	P2 (m)	Test	Filter water surface height (m)	Storage Tank surface elevatin	Pressure Gauge Elev.	P1 Elev	P2 Elev
				Before Backwash					
0,438	0,651	4,4663736	6,6383772	Test #1	3,3	4,71	245,95	250,41637	252,5883772
0,355	0,685	3,620006	6,985082	Test #2	3,16	5,13	245,95	249,57001	252,935082
				Ripening					
0,494	0,391	5,0374168	3,9871052	Test #1	3,4		245,95	250,98742	249,9371052
0,485	0,391	4,945642	3,9871052	Test #2	3,35		245,95	250,89564	249,9371052
0,482	0,391	4,9150504	3,9871052	Test #3	3,34		245,95	250,86505	249,9371052
				After Ripening					
0,518	0,636	5,2821496	6,4854192	Test #1	3,38	4,74	245,95	251,23215	252,4354192
0,466	0,686	4,7518952	6,9952792	Test #2	3,21	5,23	245,95	250,7019	252,9452792

Test	Filter Water Elev	Loss in Filter	Storage water Elev.	Loss Pump to Storage
Before Backwash				
Test #1	251,48	1,0636264	250,68	1,9083772
Test #2	251,34	1,769994	251,1	1,835082
Ripening				
Test #1	251,58	0,5925832	**No water transported to storage tank under the ripening phase.**	
Test #2	251,53	0,634358		
Test #3	251,52	0,6549496		
After Ripening				
Test #1	251,56	0,3278504	250,71	1,7254192
Test #2	251,39	0,6881048	251,2	1,7452792

Storage Tank Parameters				
	Elev			Height at Overlow
Overflow at	251,7		Storage	5,73
Empty	245,97			

Calibration of 0 flow: Filter surface vs Pressure before valve, should be equal						
P (bar)	P (m)	Filter height	Filter surface elev.	Gauge/flo or Elev.	Water surface at gauge	Head loss
0,557	5,68127	3,48	251,66	245,95	251,631272	0,02872811

Pressure info	
P1	Post filter, pre pump
P2	Post pump

Pressure Change pre/post Backwashing Process			
Flow (l/s)	Pre (m)	Post (m)	Percent Change
3	1,0636264	0,3278504	69,17616938
6	1,769994	0,6881048	61,12389082

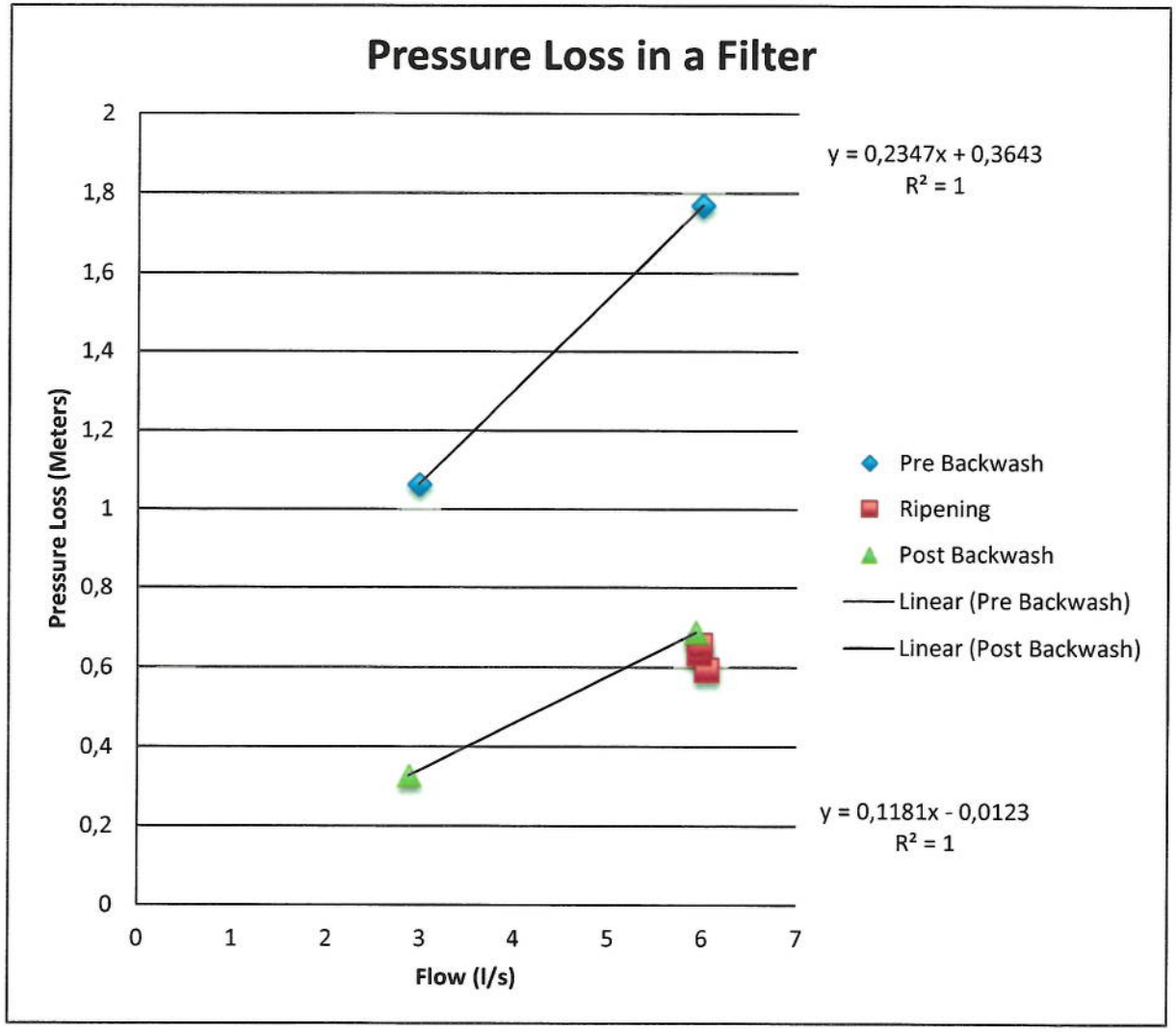
Pressure Loss in a Filter
Pressure Loss (Meters)
2
1,8
1,6
1,4
1,2
1
0,8
0,6
0,4
0,2
0
0
1
2
3
4
5
6
7
Flow (l/s)
y = 0,2347x + 0,3643
R² = 1
y = 0,1181x - 0,0123
R² = 1
Pre Backwash
Ripening
Post Backwash
Linear (Pre Backwash)
Linear (Post Backwash)

Appendix H:

Diaphragm Valve Spec Sheet

FAGERBERG

DN 40 - 400
PN 6*/10/16
Pmax = 16 bar

*on agreement

FA6530 FAGSTOP

DIAPHRAGM NON-RETURN VALVE

- Flanged centric non return valve with soft sealing for complete, quick and silent closing of the return flow
- Ensured integrity in food - processing industry
- Wide range of application
- Excellent flow characteristics
- Technical delivery conditions to EN 12266 - 1,2
- EN 19 Specification
- Face to face EN 558-1, basic series 48 (DIN 3202, F6)
- Strength test / Pressure testing to EN 12266 - P10, P11
- Flanged connections EN 1092-2 PN 10/16

Adresse/Address
Fagerberg Norge AS
Årvollskogen 33
1529 Moss

Telefon/Telephone
+ 47 69 35 55 30
Telefax/Telecopy
+ 47 69 35 55 31

E-post/E-mail
post@fagerberg.no
Hjemmeside/Web-site
www.fagerberg.no

Bankonto/Bank account
5183.05.40869
Foretaksnr./Reg. No.
NO 856 326 942 MVA

SellihcA

ORDER CODE

Body
EN-GJS-400-15U (JS1030), GGG 40 **02**
EN-GJL-250 (JL 1040), GG 25 **01**

Seal material
EPDM (Nordel) -30°C ... 90°C **E**
NBR (Perbunan) -20°C ... 50°C **P**

Guide material
EN-GJS-40015-U (JS1030), GGG 40 **02**
EN-GJL-250 (JL 1040), GG 25 **01**

Pressure rating
PN 10 **10**
PN 16 **16**

Nominal size
DN 40 - 400

Other materials for body, guide and seal are also available on agreement and on placing the order.

TECHNICAL DRAWING

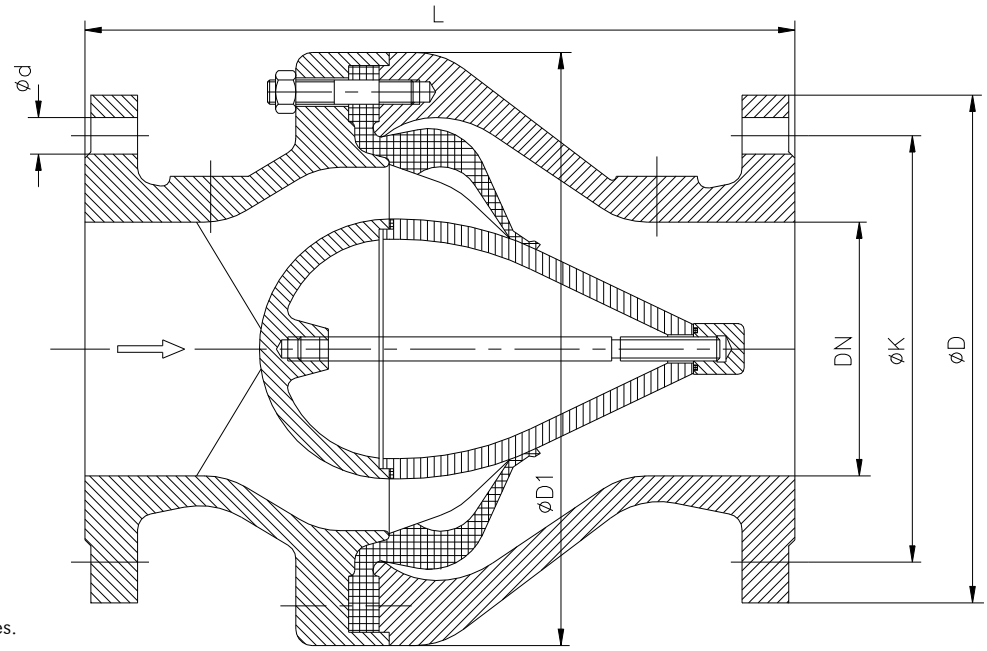

We have the right to technical changes.

TECHNICAL INFORMATION

MEVA VALVE DIMENSIONS													
			Flange PN10				Flange PN16				Flow characteristic		Weight
DN	L	D1	D	Dk	n	ϕd	D	Dk	n	ϕd	Kv (m3/h)	ζ (-)	kg
40	180	150	150	110	4	18	150	110	4	18	25.28	6.41	9.50
50	200	175	165	125	4	18	165	125	4	18	38.05	6.91	14.10
65	240	220	185	145	4	18	185	145	4	18	65.40	6.68	16.00
80	260	220	200	160	8	18	200	160	8	18	99.78	6.58	24.00
100	300	292	220	180	8	18	220	180	8	18	157.65	6.44	49.00
125	350	292	250	210	8	18	250	210	8	18	236.62	6.98	50.50
150	400	292	285	240	8	22	285	240	8	22	351.76	6.55	55.00
200	500	380	340	295	8	22	340	295	12	22	646.08	6.13	101.00
250	600	446	405	350	12	22	405	355	12	26	972.03	6.61	146.00
300	700	550	460	400	12	22	460	410	12	26	1407.05	6.55	251.00
350	800	645	505	460	16	22	-	-	-	-	1915.33	6.54	352.00
400	900	720	565	515	16	26	-	-	-	-	2526.89	6.41	423.00

All dimensions are in mm.

MEVA TEST			
	TEST PRESSURE (bar)		Max. operating pressure at
Pressure rating (bar)	Body	Sealing	80° C (bar)
10	16	10	10
16	24	16	16

Adresse/Address
Fagerberg Norge AS
Årvollskogen 33
1529 Moss

Telefon/Telephone
+ 47 69 35 55 30
Telefax/Telecopy
+ 47 69 35 55 31

E-post/E-mail
post@fagerberg.no
Hjemmeside/Web-site
www.fagerberg.no

Bankonto/Bank account
5183.05.40869
Foretaksnr./Reg. No.
NO 856 326 942 MVA

Appendix I:

Measured Values For Post Filter Check Valve

Test	Time	Flow	Hz	P1 (bar)	P2 (bar)	Head loss (bar)	P1 (m)	P2 (m)	Check Valve Loss (m)
Check Valve									
Test #1	17:04	1,48	8,8	0,608	0,489	0,119	6,1998976	4,9864308	1,2134668
Test #2	17:14	2,97	13,7	0,643	0,5	0,143	6,5567996	5,0986	1,4581996
Test #3	17:16	2,97	13,8	0,641	0,498	0,143	6,5364052	5,0782056	1,4581996
Test #4	17:26	5,96	21,2	0,678	0,511	0,167	6,9137016	5,2107692	1,7029324

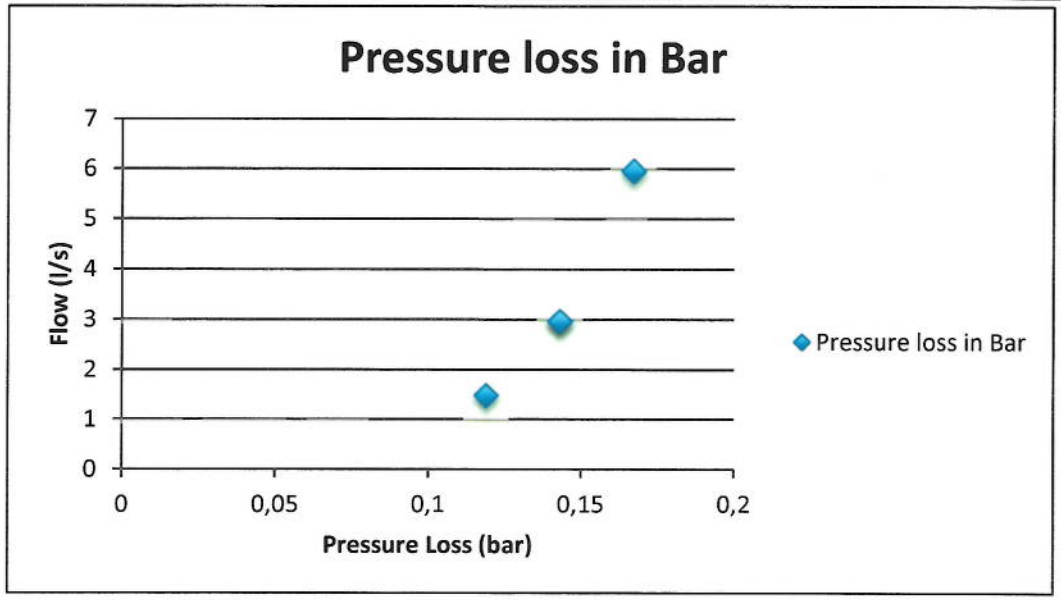

Pressure info	
P1	Post Pump, pre check valve
P2	Post Check valve and elbow bend

Storage Tank Level (m)	Storage Tank WSE	P2 WSE	Loss P2 to Storage
4,68	250,65	250,9364	0,2864308
4,77	250,74	251,0486	0,3086
4,8	250,77	251,0282	0,2582056
5,25	251,22	251,1608	-0,0592308

Storage Tank Info	
	Elev
Overflow at	251,7
Empty	245,97

Gauge Elevatoin	
Concrete	245,85
Added Slope	0,1
=	245,95

	Height at Overlow
Storage	5,73
Vavle	57,7208
Bend	0,3
q=va	
k sum	58,0208
d	0,1
g	9,81
v	
hl	

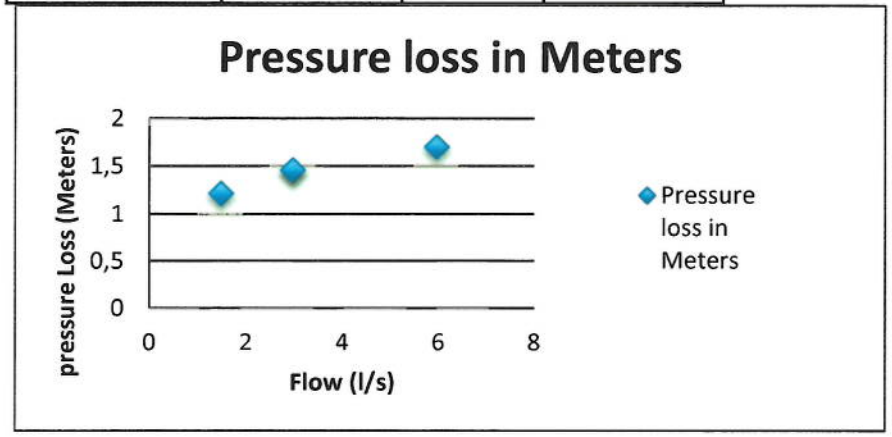

Test	Area	Flow	Velocity	Hl singular
1	0,00785398	0,00148	0,18843945	0,10500945
2	0,00785398	0,00297	0,37815214	0,42288068
3	0,00785398	0,00297	0,37815214	0,42288068
4	0,00785398	0,00596	0,75885077	1,70293263

Appendix J:

Measured Values for Post Filter Pipe Collection

Test	Time	Flow per filter	Flow Total	Pressure (bar)	Water storage level	Pressure (m)		Ground floor Elevation
Post filter								
Test #1	17:35	5,95	23,8	0,534	5,7	5,4453048		250
Test #2	17:40	3,02	12,08	0,56	5,7	5,710432		250
Test #3	17:51	1,55	6,2	0,554	5,61	5,6492488		250

Pump Info	
P	Post Filter Pumps

Note, unlike the other tests, these tests were preformed as the flow rate decrease, opposite of the other tests.

Elevation tank water surface	Elevation of pre UV	Pressure loss	
251,67	255,445305	3,7753048	
251,67	255,710432	4,040432	
251,58	255,649249	4,0692488	

overflow	251,7
over-5.73	245,97
Concrete	245,85
Added Slope	0,1
	245,95

Filter #4

Appendix K:

Pressure Loss Curve For UV Disinfection Process

TROJAN UV SWIFT™ SC

D12 Headloss Curve

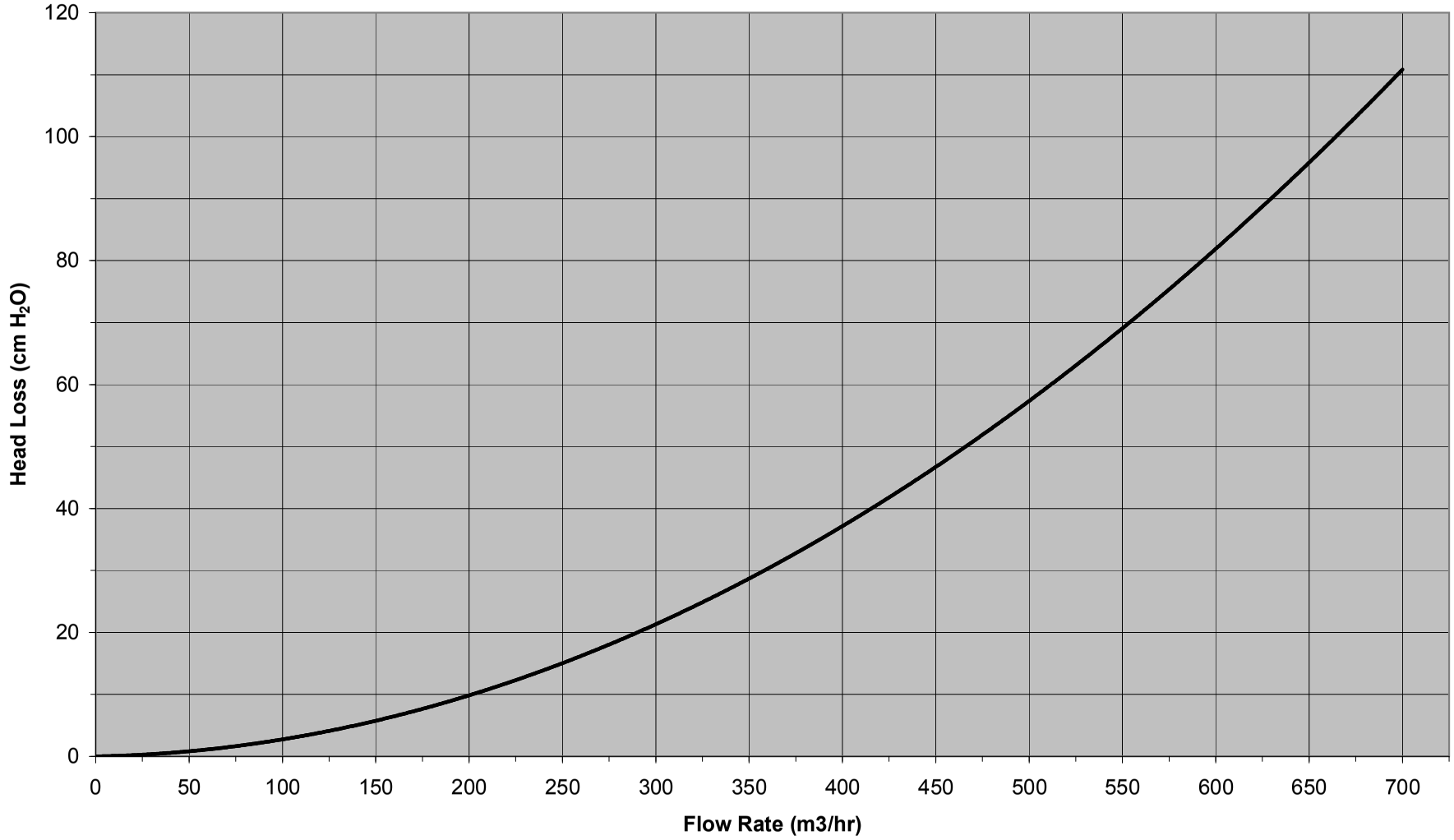

UV Disinfection

Headloss		Flow	
cm	m	m3/hr	m3/s
0	0	0	0
0,08	0,0008	50	0,01388889
2,66666667	0,0266667	150	0,04166667
5,73333333	0,0573333	200	0,05555556
9,86666667	0,0986667	250	0,06944444
21,3333333	0,2133333	300	0,08333333
28,8	0,288	350	0,09722222
37,0666667	0,3706667	400	0,11111111
46,8	0,468	450	0,125
58	0,58	500	0,13888889
68,9333333	0,6893333	550	0,15277778
81,8666667	0,8186667	600	0,16666667
96,5333333	0,9653333	650	0,18055556
110,533333	1,1053333	700	0,19444444

Values taken by measuring witha millimeter ruler and then transposing to the correct values using a ratio from the lenth to 100 cm loss

Q	Length	hl	mm	Q
100	7,5	0,08	0,006	50
		2,66666667	0,2	150
13,3333333	Ratio	5,73333333	0,43	200
		9,86666667	0,74	250
		21,3333333	1,6	300
		28,8	2,16	350
		37,0666667	2,78	400
		46,8	3,51	450
		58	4,35	500
		68,9333333	5,17	550
		81,8666667	6,14	600
		96,5333333	7,24	650
		110,533333	8,29	700

Equation for Loss Through UV
Y=-63,518x^3+47,928x^2-1,2659x+0,0015

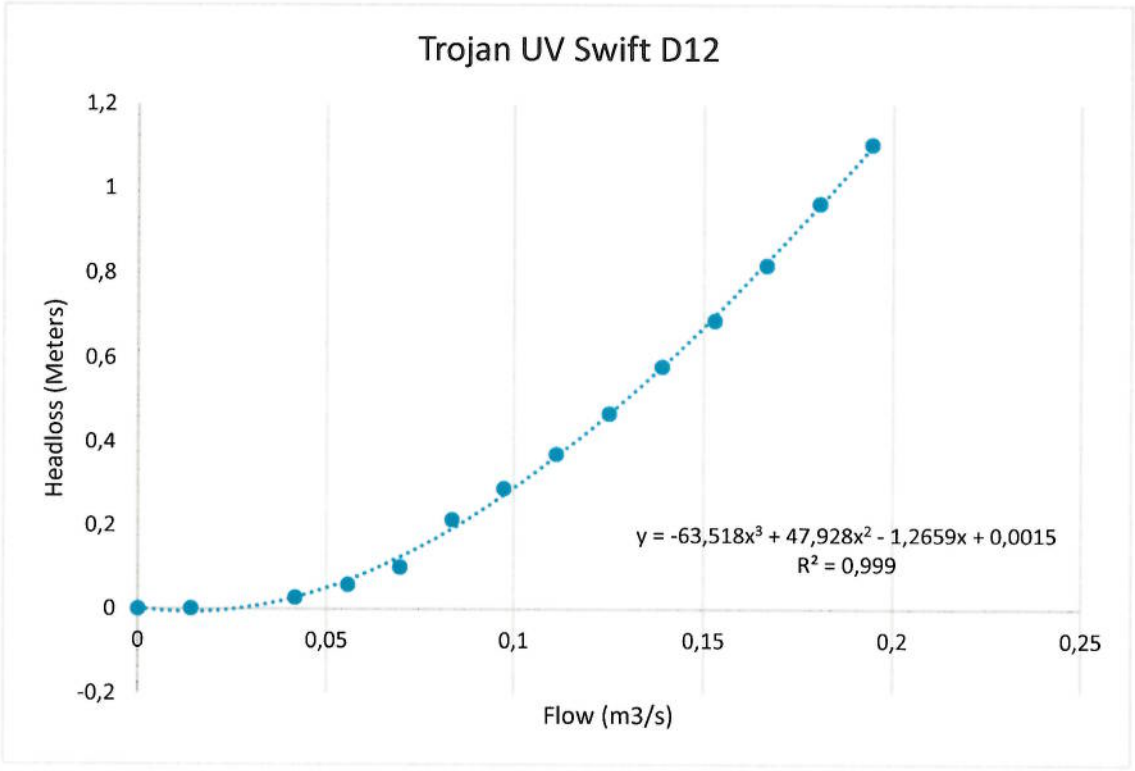

Appendix L:

Measured Values Post Intake Pump

Test	Time	Flow	Hz	Amps	P1 (bar)	P2 (bar)	P1 (m)	P2 (m)
Intake Pump, 100% Open Valve								
Test #1	08:38	22	40,1	6,975	0,211	1,04	2,1516092	10,605088
Test #2	03:46	37	50	10,575	0,085	0,885	0,866762	9,024522
Valve Cloed by 10 revolutions, ~66%								
Test 1	08:56	37	50	10,575	0,095	0,882	0,968734	8,9939304
Pump turned off								
Test 1	09:05	0	0	0	0,283	0,281	2,8858076	2,8654132

Pressure info	
P1	Post pump filter, pre pump
P2	Post pump

Filter info			
	Elev		Height at Overflow
Overflow at	251,92	Filter 4	3,7
Empty	248,22		

Overflow of Filter	Filter #1 Level	Real filter height	Filter WSE	Gauge Elevation	Nisser Ref Elev	Nisser Level	Nisser WSE	P1 WSE	P2 WSE
0,004	3,7	3,704	251,92	242,92	243,815	2,5	246,315	245,0716092	253,525088
0,009	3,7	3,709	251,92	242,92	243,815	2,5	246,315	243,786762	251,944522
	3,7		251,92	242,92	243,815	2,5	246,315	243,888734	251,91393
	3,7		251,92	242,92	243,815	2,5	246,315	245,8058076	245,785413

Real Filter WSE with Overflow Calc	Pressure Loss to filter	Real Pressure Loss	Pressure loss from intake
251,924	1,605088	1,601088	1,2433908
251,929	0,024522	0,015522	2,528238
	-0,0060696		2,426266
	-6,1345868		0,5091924

Pressure at P1 is controlled by check valve not allowing full pressure from the pressure side of the pump.

Appendix M:

Pre Pump Filter Specifications

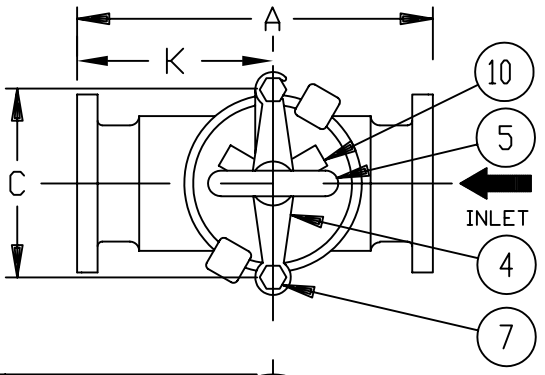

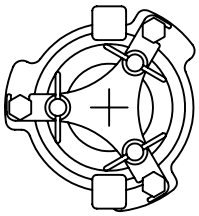

8" COVER & YOKE DETAIL

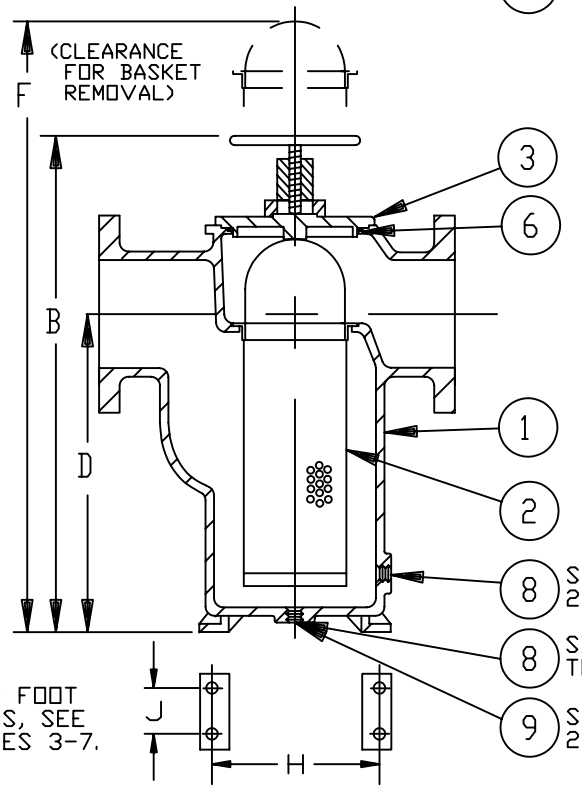

FOR FOOT PADS, SEE NOTES 3-7.

NO.	PART NAME	MATERIAL
1	BODY	CAST IRON ASTM A126 CL.B
2	SCREEN	
	PERF. DIA.	
	MESH	
3	COVER	CAST IRON ASTM A126 CL.B
4	YOKE	DUCTILE IRON
5	YOKE SCREW	STEEL
6	O-RING	BUNA-N
7	STUD	STEEL
8	DRAIN PLUG	CARBON STEEL
9	BODY PLUG	CAST IRON
10	COVER CLAMP	DUCTILE IRON

NOTES:

1. INLET/OUTLET FLANGED CONNECTIONS DRILLED IN ACCORDANCE WITH DIN 2632 / DIN 2633 - FLAT FACED.
2. COVER CLAMP (ITEM 10) FOR 4", 5", 6" SIZES.
3. NO FOOT PADS FOR SIZES 1", 1-1/4", 1-1/2".
4. 7/16"ø SLOTTED FOOT PADS FOR SIZE 2".
5. 1/2"ø SLOTTED FOOT PADS FOR SIZES 2-1/2",3".
6. 9/16"ø HOLED FOOT PADS FOR SIZES 4",5",6".
7. 5/8"ø SLOTTED FOOT PADS FOR SIZE 8".
8. DIMENSIONS B,D,F ARE FROM BOTTOM OF STRAINER.
9. DIMENSION "G" (NPT) IS FOR DRAIN PLUG, ITEM 8.
10. ITEM 9, BODY PLUG IS NOT TO BE USED AS DRAIN.
11. MAX. WORKING PRESSURE : 200 PSI @ 100° F (13.8 BAR @ 37.8° C)

CERTIFIED FOR:

P. O. NO.:

REG. NO.:

QUOTE NO.:

TAG NO.:

PIPE SIZE (NOMINAL)	DIMENSIONS									WEIGHT (DRY)		PART NO.
	A IN. MM.	B IN. MM.	C IN. MM.	D IN. MM.	F IN. MM.	G (NOM.) IN. MM.	H IN. MM.	J IN. MM.	K IN. MM.	LBS	KGS	
1" (25mm)	7.63/ 194	8.38/ 213	4.00/ 102	5.00/ 127	13/ 330	1/2 (15)	----	----	4.31/ 109	9/	4	ST072010AD40
1-1/4" (32mm)	10.25/ 260	11.00/ 279	4.88/ 124	7.00/ 178	16/ 406	3/4 (20)	----	----	5.63/ 143	13/	6	ST072012AD40
1-1/2" (40mm)	10.25/ 260	11.00/ 279	4.88/ 124	7.00/ 178	16/ 406	3/4 (20)	----	----	5.63/ 143	17/	8	ST072015AD40
2" (50mm)	10.50/ 268	13.75/ 349	6.75/ 172	7.63/ 194	20/ 508	1/2 (15)	5.50/140	2.50/ 64	5.75/ 146	37/	17	ST072020AD40
2-1/2" (65mm)	11.63/ 295	15.63/ 397	7.94/ 202	8.88/ 226	23/ 584	3/8 (10)	6.50/165	2.88/ 73	6.63/ 168	54/	24	ST072025AD40
3" (80mm)	13.13/ 334	18.00/ 457	8.00/ 203	11.00/ 279	27/ 686	3/8 (10)	7.00/178	3.13/ 80	7.25/ 184	76/	34	ST072030AD40
4" (100mm)	16.75/ 425	19.88/ 505	10.69/ 272	10.69/ 272	29/ 737	1/2 (15)	10.00/254	3.88/ 99	9.38/ 238	125/	57	ST072040AD40
5" (125mm)	18.13/ 460	25.13/ 628	10.69/ 272	15.19/ 386	38/ 965	1/2 (15)	10.00/254	4.63/118	10.13/ 257	170/	77	ST072050AD40
6" (150mm)	19.63/ 499	28.50/ 724	10.69/ 272	18.31/ 465	46/1168	1/2 (15)	10.00/254	5.00/127	10.81/ 275	200/	91	ST072060AD40
8" (200mm)	27.00/ 686	40.00/1016	----	27.00/ 686	60/1524	1-1/2(40)	15.75/400	8.63/219	15.50/ 394	500/	227	ST072080AD40

ELECTRONIC FILE NAME: A4-1234B.DWG

REF. ECR	DATE

UNAUTHORIZED USE, MANUFACTURE OR REPRODUCTION IN WHOLE OR IN PART IS PROHIBITED. DRAWING, DESIGN AND OTHER DISCLOSURES PROPERTY OF EATON FILTRATION, LLC

EATON FILTRATION, LLC

900 FAIRMOUNT AVENUE, ELIZABETH, NEW JERSEY 07207

NAME: MODEL 72 SIMPLEX STRAINER
DIN PN16 FLAT FACE FLANGE
SIZES 1" THRU 8" CAST IRON

DRAWN	DATE	CERT.	DATE
CJL	29/06/00	CJL	29/06/00

SIZE	DWG NO	REV
A4	A4-1234	B

Appendix N:

Measured Values For Pre Pump Filter Loss

Test	Time	Flow	P1 (bar)	P2 (bar)	P1 (m)	P2 (m)	Pressure Loss
Pre Pump Filter							
Test #1	09:19	0	0,282	0,282	2,8756	2,8756	0
Test #2	09:27	22	0,248	0,215	2,5289	2,1924	0,3365076
Test #3	09:31	37	0,188	0,1	1,9171	1,0197	0,8973536

Elevation is not needed in this calculatoin as both points are meassured from the same point, and the pressure loss through the filter is the focus

As long as nothing is clogging the pump, the loss should be relatively small

Pressure info	
P1	Pre Pump Filter
P2	Post Pump Filter

Appendix O:

Measured Values For Post Intake Pump Combination Pipe

Test	Time	Flow	Hz	Amps	P intake (bar)	P1 (bar)	P2 (bar)	P1 (m)
Post pumps, pre filter								
Test #1	09:57	0	0	0	0,181	0,264	0,88	2,6920608
Test #2	10:04	22,25	40,1	6,975	0,181	0,207	0,891	2,1108204
Test #3	10:14	37,13	50	10,5	0,156	0,088	0,905	0,8973536

Pressure Info	
P1	Pre pumps, post pre pump filter
P2	Post Parallel Pumps

a	0,19634954		
v	0,18910154		
z1	245,35	z2	251,9
hl	245,351823		

Filter Info	
Filter	251,9
Empty	248,18

Gauge Info	
Elevation	242,92

P2 (m)	Lake Water Level	Reference Elevation	Filter Level	Gauge Elevatoin	WSE Post Pump	Filter Surface Elev	Loss to Filter	Loss to intake pump
8,973536	2,25	243,815	3,7	242,92	251,893536	251,88	0,013536	0,4529392
9,0857052	2,25	243,815	3,7	242,92	252,0057052	251,88	0,1257052	1,0341796
9,228466	2,25	243,815	3,7	242,92	252,148466	251,88	0,268466	2,2476464

Appendix P:

Measured Losses From Static Mixer

Test	Time	Flow	Hz	Amps	P intake (bar)	P1 (bar)
1 Pump						
Test #1	10:50	0	0	0	0,147	0,289
Test #2	10:53	22	40,1	6,975	0,181	0,3
Test #3	10:58	37	50	10,5	0,156	0,32
2 Pumps						
Test #1	11:02	68,07	50	10,2	0,079	0,37
			50	10,2	0,079	

Pressure info		Filter Info	
P1	Post filter, pre pump	Filter	251,9
P2	Post pump	Empty	248,18

Pump 2 had valve slightly closed, 50%			
Test No Flow, P1=P2			
P1	0,294	P2	0,292
		Difference:	0,002

P2 (bar)	P1 (m)	P2 (m)	Filter Level	Gauge Elevatoin	Pre Static Mixer WSE	Post Static Mixer WSE	Pressure Loss
0,283	2,94699	2,88581	3,7	248,97	251,9169908	251,8558076	0,0611832
0,288	3,05916	2,93679	3,7	248,97	252,02916	251,9067936	0,1223664
0,301	3,2631	3,06936	3,7	248,97	252,233104	252,0393572	0,1937468
0,33	3,77296	3,36508	3,7	248,97	252,742964	252,335076	0,407888

Appendix Q:

Compilation Of Measured Values For Raw Water

Test	Time	Flow l/s	P measured (bar)	Storage Level (m)	Overflow Depth (m)	Elevatoin P1	Filter Elevation	Pressure Loss
Post Intake Pump, Gate Valve Fully Open	08:38	22	1,004	3,7	0,004	253,158	251,9	1,257989
	08:46	37	0,885	3,7	0,009	251,945	251,9	0,044522
Gate Valve Half Closed	08:56	37	0,882	3,7		251,914	251,9	0,01393
Post Pipe Combination	09:57	0	0,88	3,7		251,894	251,9	-0,00646
	10:04	22	0,891	3,7		252,006	251,9	0,105705
	10:14	37	0,905	3,7		252,148	251,9	0,248466
Post Pipe Combination, Pre Static Mixer	10:50	0	0,289	3,7		251,917	251,9	0,016991
	10:53	22	0,3	3,7		252,029	251,9	0,12916
	10:58	37	0,32	3,7		252,233	251,9	0,333104
2 Pumps Post Combination	11:02	68,07	0,37	3,7	0,018	252,743	251,9	0,842964

The test occuring at 8:38 has an unusually high pressure loss. A possible, and most likely probable explanation is that the check valve did not fully open. This is a likely explenation as the pump had not been in use for a period of time before testing was conducted. The check valve was most likey only opening part way, and did not completely open until a higher flow was tested.

Filter info				
	Elev			Height at Overflow
Overflow at	251,9		Filter	3,7
	Empty	248,2		
	Pressure Reference Point		Pressure Reference Point 2	
		Elevatoin		Elevatoin
	Gauge	242,92	Gauge	248,97

Test Point	Section	Flow (l/s)	Average Loss (m)	
A	Post Intake Pump	22	1,2579888	Test on the pressure side of the pump were all preformed at different locatoins for the same flow, thus it is there is no average of loss from point A to B based on multiple tests. But rather a singe example and result. However, it is possible to calculate the loss between test points by viewing the observed pressures
		37	0,044522	
A	Gate Valve Half Closed	37	0,0139304	
B	Post Pipe Combination	0	-0,006464	
		22	0,1057052	
		37	0,248466	
C	Post Pipe Combination /Pre Static Mixer	0	0,0169908	
		22	0,12916	
		37	0,333104	
C	2 Pumps	68,07	0,842964	

Pressure Loss between measuting points		
Section	Flow (l/s)	Loss (m)
A-B	22	1,1522836
A-B	37	-0,203944
B-C	0	-0,0234548
B-C	22	-0,0234548
B-C	37	-0,084638

Reason for negative values: The most logical and probably correct reason for these pressure isses are that the elevatoin of the gauge could have been incorrectly recorded

Appendix R:

Compilation Of Measured Values For Clean Water

Test	Time	Flow per filter pump	Total Flow	P measured	Storage Level	Elevatoin P1	Elevatoin Storage	Pressure Loss
Pre Filter Cleaning	12:57	2,98		0,651	4,71	252,588	250,68	1,908377
	13:08	5,99		0,685	5,13	252,935	251,1	1,835082
Post Filter Ripening	15:29	2,88		0,636	4,74	252,435	250,71	1,725419
	15:48	5,93		0,686	5,23	252,945	251,2	1,745279
Check Valve Test	17:04	1,48		0,608	4,68	252,15	250,65	1,499898
	17:14	2,97		0,643	4,77	252,507	250,74	1,7668
	17:16	2,97		0,641	4,8	252,486	250,77	1,716405
	17:26	5,96		0,678	5,25	252,864	251,22	1,643702
Post pipe filter pipe combinatio n	17:35	5,95	23,8	0,534	5,7	251,395	251,67	-0,2747
	17:40	3,02	12,08	0,56	5,7	251,66	251,67	-0,00957
	17:51	1,55	6,2	0,554	5,61	251,599	251,58	0,019249

Storage Tank Info				
	Elev			Height at Overlow
Overflow at	251,7		Storage	5,73
Empty	245,97			
Pressure Reference point				
	Elevatoin			
Gauge	245,95			

Post Filter Pump(s)		
Section	Flow (l/s)	Avg. Loss (m)
Filter Pump to Storage	1,5	1,4998976
	3	1,7792503
	6	1,741354267
Filter Pump Collection to Storage	1,5	0,0192488
	3	-0,009568
	6	-0,2746952

Appendix S:

Blank/Zeroed Workbook Ready For A New Project

Treatment Plant:			
Treungen			
		Flow	0,03
Date	July 1, 2016	Viscosity	1,31E-06
		K	1,50E-05

Section	Total Loss Per Section	Units
Raw Water	0,834058034	Meters
Filter	#DIV/0!	Meters
Clean Water	0,02002113	Meters
Total Loss Experienced	#DIV/0!	Meters

Plant Altercatioins	#
Intake Pumps: 1 or 2	1
Filters in operation: 3 or 4	4
UV in operation: 1 or 2	1

Major Losses Due to Friction	
Flow	0,03
Viscosity	1,31E-06
k steel	0,000015
k PE	

Plant Altercatioins	#
Intake Pumps: 1 or 2	1
Filters in operation: 3 or 4	4
UV in operation: 1 or 2	1

Reference	Section	Diameter	Pipe Length/Section	Split Flow? Yes/No	Splint into	Split Flow	Reduced flow? Yes/No	% of Total flow (0-100)
Raw Water		1	1,000	No	1	0,03	no	100
		1	1,000	No	1	0,03	no	100
			1,000	No	1	0,03	no	100
		1	1,000	No	1	0,03	no	100
		1	1,000	No	1	0,03	no	100
		1	1,000	No	1	0,03	no	100
		1	1,000	No	1	0,03	no	100
		1	1,000	No	1	0,03	no	100
		1	1,000	No	1	0,03	no	100
		1	1,000	no	1	0,03	no	100
		1	1,000	No	1	0,03	no	100
		1	1,000	No	1	0,03	no	100
		1	1,000	No	1	0,03	no	100
		1	1,000	No	1	0,03	no	100
		1	1,000	No	1	0,03	no	100

Reduced Flow	Area	Velocity	D(h)	Re	K	K/D(h)	1	f	Repatitions	Major Loss Per Split	Total Major loss	k-total for Minor Loss
0,03	0,785398	0,038197	1	29158,16	0,000015	0,000015	1,000101	0,023685	1	1,7613E-06	1,7613E-06	
0,03	0,785398	0,038197	1	29158,16	0,000015	0,000015	0,999893	0,023676	1	1,7607E-06	1,7607E-06	
0,03	0	0	0	0	0,000015	0		0,023649	1	0	0	
0,03	0,785398	0,038197	1	29158,16	0,000015	0,000015	0,999714	0,023669	1	1,7601E-06	1,7601E-06	
0,03	0,785398	0,038197	1	29158,16	0,000015	0,000015	0,999628	0,023665	1	1,7598E-06	1,7598E-06	
0,03	0,785398	0,038197	1	29158,16	0,000015	0,000015	0,999628	0,023665	1	1,7598E-06	1,7598E-06	
0,03	0,785398	0,038197	1	29158,16	0,000015	0,000015	0,999714	0,023669	1	1,7601E-06	1,7601E-06	
0,03	0,785398	0,038197	1	29158,16	0,000015	0,000015	0,999628	0,023665	1	1,7598E-06	1,7598E-06	
0,03	0,785398	0,038197	1	29158,16	0,000015	0,000015	0,999628	0,023665	1	1,7598E-06	1,7598E-06	
0,03	0,785398	0,038197	1	29158,16	0,000015	0,000015	0,999504	0,02366	1	1,7595E-06	1,7595E-06	
0,03	0,785398	0,038197	1	29158,16	0,000015	0,000015	0,999912	0,023677	1	1,7607E-06	1,7607E-06	
0,03	0,785398	0,038197	1	29158,16	0,000015	0,000015	0,999828	0,023674	1	1,7605E-06	1,7605E-06	
0,03	0,785398	0,038197	1	29158,16	0,000015	0,000015	0,999965	0,023679	1	1,7609E-06	1,7609E-06	
0,03	0,785398	0,038197	1	29158,16	0,000015	0,000015	0,999816	0,023673	1	1,7604E-06	0,000002	
0,03	0,785398	0,038197	1	29158,16	0,000015	0,000015	0,999504	0,02366	1	1,7595E-06	1,7595E-06	

Minor Loss for Diameter transition flow	Minor Loss per Split	Total Minor loss	Unit preocess	Total Major+Minor Loss
0	0	0	0	1,76132E-06
0	0	0	0	1,76067E-06
0	0	0	0	0
0	0	0	0	1,76012E-06
0	0	0	0	1,75985E-06
0	0	0	0	1,75985E-06
0	0	0	0,8340334	0,834035151
0	0	0	0	1,75985E-06
0	0	0	0	1,75985E-06
0	0	0	0	1,75946E-06
0,02	0	0	0	1,76073E-06
#REF!	0	0	0	1,76047E-06
0	0	0	0	1,7609E-06
0,02	0	0	0	1,76043E-06
#REF!	0	0	0	1,75946E-06

Major Losses Due to Friction	
Flow	0,03
Viscosity	1,31E-06
K	0,000015

Plant Altercatioins	#
Intake Pumps: 1 or 2	1
Filters in operation: 3 or 4	4
UV in operation: 1 or 2	1

Reference	Section	Diameter	Pipe Length/Section	Split Flow? Yes/No	Splint into	Split Flow	Reduced flow? Yes/No	% of Total flow (0-100)
Clean Water		1	1,000	No	1	0,03	No	100
		1	1,000	No	1	0,03	No	100
		1	1,000	No	1	0,03	No	100
		1	1,000	No	1	0,03	No	100
		1	1,000	No	1	0,03	No	100
		1	1,000	No	1	0,03	No	100
		1	1,000	No	1	0,03	No	100
		1	1,000	No	1	0,03	No	100
		1	1,000	No	1	0,03	No	100
		1	1,000	No	1	0,03	No	100
		1	1,000	No	1	0,03	No	100
		1	1,000	No	1	0,03	No	100
		1	1,000	No	1	0,03	No	100
		1	1,000	No	1	0,03	No	100

Reduced Flow	Area	Velocity	D(h)	Re	K	K/D(h)	1	f	Repatitions	Major Loss Per Split	Total Major loss	k-total for Minor Loss
0,03	0,785398	0,038197	1	29158,16	0,000015	0,000015	1,000279	0,023692	1	1,7619E-06	1,7619E-06	
0,03	0,785398	0,038197	1	29158,16	0,000015	0,000015	0,999979	0,02368	1	1,7609E-06	1,7609E-06	
0,03	0,785398	0,038197	1	29158,16	0,000015	0,000015	0,999979	0,02368	1	1,7609E-06	1,7609E-06	
0,03	0,785398	0,038197	1	29158,16	0,000015	0,000015	0,99982	0,023673	1	1,7604E-06	1,7604E-06	
0,03	0,785398	0,038197	1	29158,16	0,000015	0,000015	0,999966	0,023679	1	1,7609E-06	1,7609E-06	
0,03	0,785398	0,038197	1	29158,16	0,000015	0,000015	0,999828	0,023674	1	1,7605E-06	1,7605E-06	
0,03	0,785398	0,038197	1	29158,16	0,000015	0,000015	0,999984	0,02368	1	1,761E-06	1,761E-06	
0,03	0,785398	0,038197	1	29158,16	0,000015	0,000015	0,999984	0,02368	1	1,761E-06	1,761E-06	
0,03	0,785398	0,038197	1	29158,16	0,000015	0,000015	0,999866	0,023675	1	1,7606E-06	1,7606E-06	
0,03	0,785398	0,038197	1	29158,16	0,000015	0,000015	0,999789	0,023672	1	1,7603E-06	1,7603E-06	
0,03	0,785398	0,038197	1	29158,16	0,000015	0,000015	0,999984	0,02368	1	1,761E-06	1,761E-06	
0,03	0,785398	0,038197	1	29158,16	0,000015	0,000015	0,999866	0,023675	1	1,7606E-06	1,7606E-06	
0,03	0,785398	0,038197	1	29158,16	0,000015	0,000015	0,999714	0,023669	1	1,7601E-06	1,7601E-06	
0,03	0,785398	0,038197	1	29158,16	0,000015	0,000015	0,999866	0,023675	1	1,7606E-06	1,7606E-06	

Minor Loss for Diameter Transition flow	Minor Loss per Split	Total Minor loss	Unit Process	Total Major+Minor Loss
0	0	0	0	1,76187E-06
0	0	0	0	1,76094E-06
0	0	0	0	1,76094E-06
0	0	0	0	1,76044E-06
0	0	0	0	1,7609E-06
0	0	0	0	1,76047E-06
0	0	0	0	1,76095E-06
0	0	0	0	1,76095E-06
	0	0	0	1,76059E-06
0	0	0	0	0,01
0	0	0	0	1,76095E-06
0	0	0	0	1,76059E-06
0	0	0	0	0,01
0	0	0	0	1,76059E-06

Filter							
Variables							
hl	Head Loss	ρw	Density of Water		μ	Viscosity	
Kv	hl coe viscous	d	Effective Size		v	Filtration Rate	
K|	hl coe inertial	ε	Porosity		g	Gravity Constant	
Operating Temp Theory:		Real			Time Conv.	3600	s/h
L	Depth		Reynolds Number			Re	
Re	Reynolds Number		ρw	999,7	kg/m		
			v	5,273438	m/h		
			d	2	m		
			μ	0,001307	kg/m*s		

Filtralite			Sand			Marble		
hl	#DIV/0!	m	hl	#DIV/0!	m	hl	#DIV/0!	m
Kv			Kv			Kv		
K|			K|			K|		
ρw		kg/m	ρw		kg/m	ρw		kg/m
d		m	d		m	d		m
ε			ε			ε		
μ		kg/m*s	μ		kg/m*s	μ		kg/m*s
v		m/h	v		m/h	v		m/h
g		m/s^2	g		m/s^2	g		m/s^2
L		m	L		m	L		m

Velovity for given area				
Area per filter	5,12	m2	# of filters	4
Flow	0,0075	m3/s		
Velovity	5,273438	m/h		

Head Loss (Meters)	
Filtrite	#DIV/0!
Sand	#DIV/0!
Marble	#DIV/0!
Total Loss	#DIV/0!

Appendix T:

Visual Basic Editor Code

```
Private Sub Worksheet_Calculate()

    Application.EnableEvents = False

    Range("U9").GoalSeek Goal:=1, ChangingCell:=Range("V9")
    Range("U10").GoalSeek Goal:=1, ChangingCell:=Range("V10")
    Range("U11").GoalSeek Goal:=1, ChangingCell:=Range("V11")
    Range("U13").GoalSeek Goal:=1, ChangingCell:=Range("V13")
    Range("U14").GoalSeek Goal:=1, ChangingCell:=Range("V14")
    Range("U16").GoalSeek Goal:=1, ChangingCell:=Range("V16")
    Range("U17").GoalSeek Goal:=1, ChangingCell:=Range("V17")
    Range("U18").GoalSeek Goal:=1, ChangingCell:=Range("V18")
    Range("U19").GoalSeek Goal:=1, ChangingCell:=Range("V19")
    Range("U20").GoalSeek Goal:=1, ChangingCell:=Range("V20")
    Range("U21").GoalSeek Goal:=1, ChangingCell:=Range("V21")
    Range("U22").GoalSeek Goal:=1, ChangingCell:=Range("V22")
    Range("U23").GoalSeek Goal:=1, ChangingCell:=Range("V23")
    Range("U93").GoalSeek Goal:=1, ChangingCell:=Range("V93")
    Range("U94").GoalSeek Goal:=1, ChangingCell:=Range("V94")
    Range("U95").GoalSeek Goal:=1, ChangingCell:=Range("V95")
    Range("U96").GoalSeek Goal:=1, ChangingCell:=Range("V96")
    Range("U97").GoalSeek Goal:=1, ChangingCell:=Range("V97")
    Range("U98").GoalSeek Goal:=1, ChangingCell:=Range("V98")
    Range("U99").GoalSeek Goal:=1, ChangingCell:=Range("V99")
    Range("U100").GoalSeek Goal:=1, ChangingCell:=Range("V100")
    Range("U101").GoalSeek Goal:=1, ChangingCell:=Range("V101")
    Range("U103").GoalSeek Goal:=1, ChangingCell:=Range("V103")
    Range("U104").GoalSeek Goal:=1, ChangingCell:=Range("V104")
    Range("U106").GoalSeek Goal:=1, ChangingCell:=Range("V106")

    Application.EnableEvents = True

End Sub
```

Appendix U:

Theoretical Results and Graphs For Raw Water

Treatment Plant:			
Treungen			
		Flow	0,023
Date	July 1, 2016	Viscosity	1,31E-06
		K	1,50E-05

Section	Total Loss Per Section	Units
Raw Water	1,706226433	Meters
Filter	0,667718756	Meters
Clean Water	1,751647167	Meters
Total Loss Experienced	4,125592356	Meters

Plant Altercatioins	#
Intake Pumps: 1 or 2	1
Filters in operation: 3 or 4	4
UV in operation: 1 or 2	1

Major Losses Due to Friction	
Flow	0,023
Viscosity	1,31E-06
k steel	0,000015
k PE	0,0000015

Plant Altercatioins	#
Intake Pumps: 1 or 2	1
Filters in operation: 3 or 4	4
UV in operation: 1 or 2	1

Reference	Section	Diameter (m)	Pipe Length/Section (m)	Split Flow? Yes/No	Splint into	Split Flow (m^3/s)	Reduced flow? Yes/No
Raw Water	Piping from intake pump to larger piping: Split=number of pumps in operation	0,15	1,546	No	1	0,023	no
	Pump 1 connection to pump 2 addition	0,15	1,247	No	1	0,023	yes
		0,25	0,246	No	1	0,023	yes
	Pump 2 connection to pump 3 addition	0,25	0,558	No	1	0,023	yes
	Pump 3 connection to Static Mixer PE Piping	0,25	5,783	No	1	0,023	No
	PE Piping pre Static Mixer	0,25	1,289	No	1	0,023	No
	Static Mixer	0	0,000	No	1	0,023	No
	PE Piping Post Static mixer	0,25	0,686	No	1	0,023	No
	Steel piping to branch to filter 1	0,25	2,256	No	1	0,023	No
	Piping to each filter	0,125	0,893	Yes	4	0,00575	no
	Filter branch 1 to branch 2	0,25	0,284	No	1	0,023	yes
		0,2	1,273	No	1	0,023	yes
	Filter branch 2 to 3	0,2	1,767	No	1	0,023	yes
	Filter branch 3 to 4	0,2	0,434	No	1	0,023	yes
		0,125	1,444	No	1	0,023	yes

% of Total flow (0-100)	Reduced Flow (m^3/s)	Area (m)	Velocity (m^2/s)	D(h)	Re	K	K/D(h)	1	f	Repati-tions	Major Loss Per Split	Total Major loss
100	0,023	0,017671	1,301534	0,15	149030,6	0,000015	0,0001	0,999953	0,017229	1	0,01533599	0,015335992
50	0,0115	0,017671	0,650767	0,15	74515,29	0,000015	0,0001	0,999699	0,019577	1	0,00351235	0,003512352
50	0,0115	0,049087	0,234276	0,25	44709,17	0,000015	0,00006	0,999443	0,021602	1	5,9391E-05	5,93907E-05
0	0	0,049087	0	0,25	0	0,000015	0,00006	1	0,015	1	0	0
100	0,023	0,049087	0,468552	0,25	89418,35	0,000015	0,00006	0,9997	0,018704	1	0,00484114	0,004841141
100	0,023	0,049087	0,468552	0,25	89418,35	1,5E-06	0,000006	0,999596	0,018434	1	0,00106318	0,001063185
100	0,023	0	0	0	0	0,000015	0	1	0,015	1	0	0
100	0,023	0,049087	0,468552	0,25	89418,35	1,5E-06	0,000006	0,999596	0,018434	1	0,00056637	0,000566369
100	0,023	0,049087	0,468552	0,25	89418,35	0,000015	0,00006	0,9997	0,018704	1	0,00188882	0,00188882
100	0,00575	0,012272	0,468552	0,125	44709,17	0,000015	0,00012	0,999515	0,021802	4	0,00174226	0,006969059
75	0,01725	0,049087	0,351414	0,25	67063,76	0,000015	0,00006	0,999598	0,019823	1	0,00014149	0,000141492
75	0,01725	0,031416	0,549085	0,2	83829,7	0,000015	0,000075	0,999703	0,019017	1	0,00185926	0,001859255
50	0,0115	0,031416	0,366056	0,2	55886,47	0,000015	0,000075	0,999551	0,020649	1	0,00124598	0,001245977
25	0,00575	0,031416	0,183028	0,2	27943,23	0,000015	0,000075	0,999256	0,024042	1	8,8976E-05	0,000089
25	0,00575	0,012272	0,468552	0,125	44709,17	0,000015	0,00012	0,999515	0,021802	1	0,00281896	0,002818958

k-total for Minor Loss	Minor Loss for Diameter transition flow	Minor Loss per Split	Total Minor loss	Unit preocess	Total Major+Minor Loss
11,80882721	0	1,0195737	1,01957373	0	1,034909724
0,7	0,02594415	0,0151095	0,01510949	0	0,018621846
0	0	0	0	0	5,93907E-05
0	0	0	0	0	0
1,4	0	0,0156655	0,01566552	0	0,020506664
1,74	0	0,01947	0,01947001	0	0,020533192
0	0	0	0	0,4902263	0,490226293
0,84	0	0,0093993	0,00939931	0	0,009965683
0	0	0	0	0	0,00188882
2	0	0,0223793	0,08951728	0	0,096486335
0,02	0,02	0,0001259	0,00012588	0	0,000267375
0	#REF!	0	0	0	0,001859255
0	0	0	0	0	0,001245977
0,02	0,02	3,415E-05	3,4148E-05	0	0,000123125
0,6	#REF!	0,0067138	0,0067138	0	0,009532754
				Sum=	1,706226433

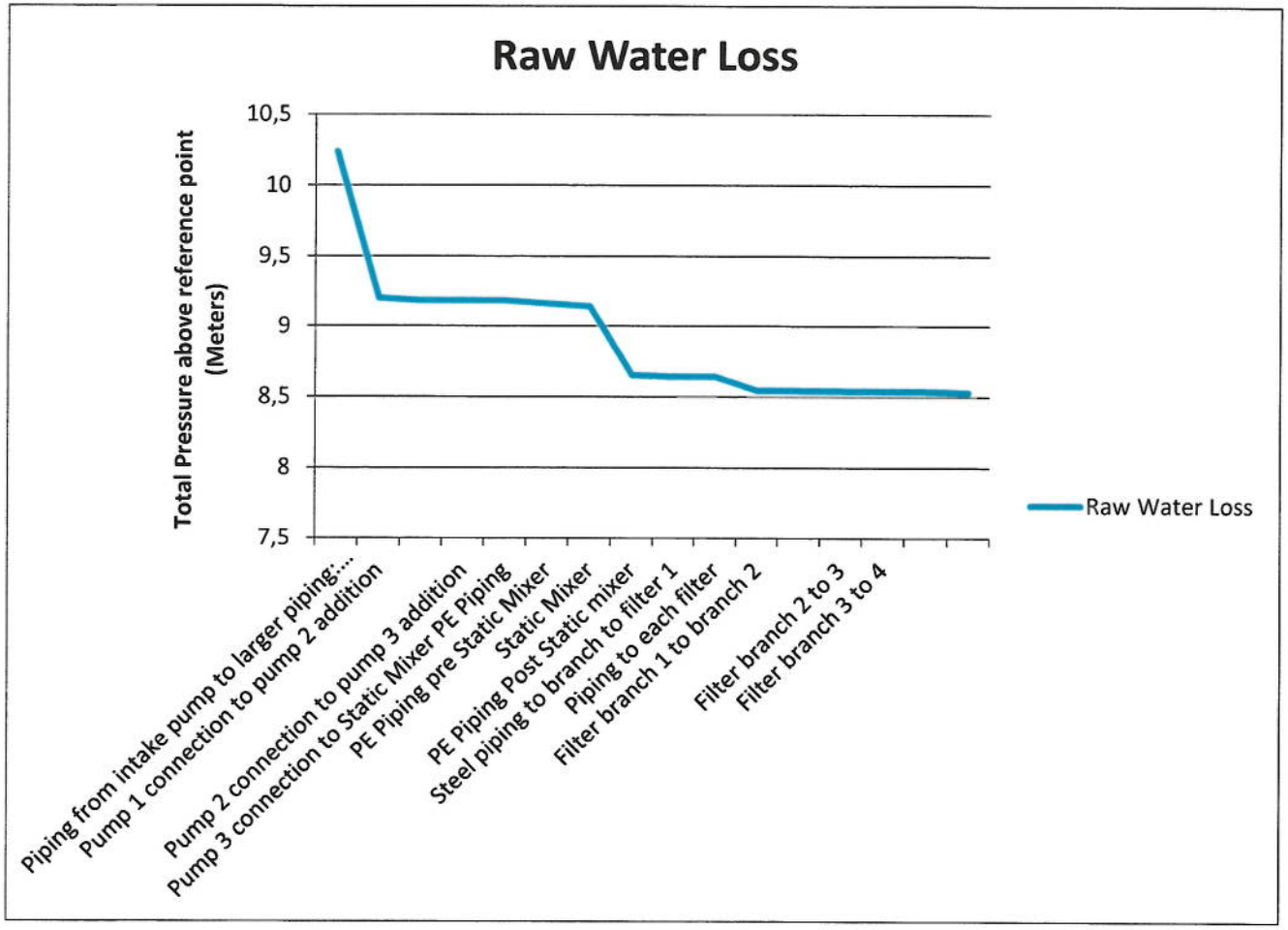
Raw Water Loss
Total Pressure above reference point (Meters)
10,5
10
9,5
9
8,5
8
7,5
Piping from intake pump to larger piping:...
Pump 1 connection to pump 2 addition
Pump 2 connection to pump 3 addition
Pump 3 connection to Static Mixer PE Piping
PE Piping pre Static Mixer
Static Mixer
PE Piping Post Static mixer
Steel piping to branch to filter 1
Piping to each filter
Filter branch 1 to branch 2
Filter branch 2 to 3
Filter branch 3 to 4
Raw Water Loss

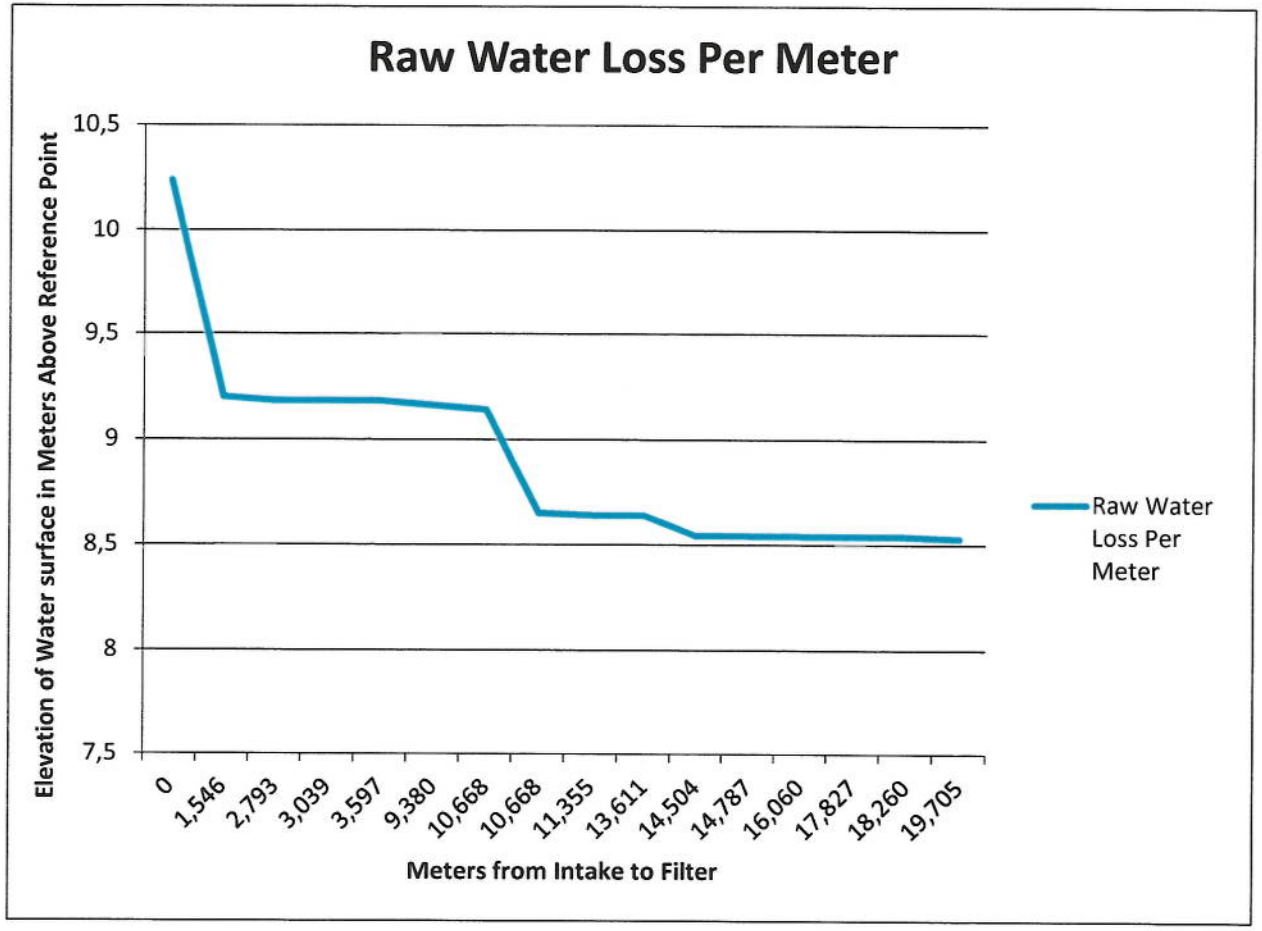
Raw Water Loss Per Meter
Elevation of Water surface in Meters Above Reference Point
10,5
10
9,5
9
8,5
8
7,5
0
1,546
2,793
3,039
3,597
9,380
10,668
10,668
11,355
13,611
14,504
14,787
16,060
17,827
18,260
19,705
Meters from Intake to Filter
Raw Water Loss Per Meter

Appendix V:

Theoretical Results and Graphs For The Filter

Filter							
Variables							
hl	Head Loss		ρw	Density of Water		μ	Viscosity
Kv	hl coe viscous		d	Effective Size		v	Filtration Rate
K|	hl coe inertial		ε	Porosity		g	Gravity Constant
Operating Temp Theory			Real			Time Conv.	3600 s/h

Reynolds Number			Re	1546,196
ρw	999,7	kg/m		
v	4,042969	m/h		
d	0,0005	m		
μ	0,001307	kg/m*s		

Head Loss (Meters)	
Filtrite	0,03423
Sand	0,10833
Marble	0,52516
Total Loss	0,66772

Filtralite			Sand			Marble		
hl	0,034227	m	hl	0,10833	m	hl	0,525161	m
Kv	319		Kv	112,5		Kv	114	
K|	6		K|	2,25		K|	1,22	
ρw	999,7	kg/m	ρw	999,7	kg/m	ρw	999,7	kg/m
d	0,0008	m	d	0,00055	m	d	0,0004	m
ε	0,6		ε	0,415		ε	0,48	
μ	0,00131	kg/m*s	μ	0,00131	kg/m*s	μ	0,00131	kg/m*s
v	4,04297	m/h	v	4,04297	m/h	v	4,04297	m/h
g	9,81	m/s^2	g	9,81	m/s^2	g	9,81	m/s^2
L	0,6	m	L	0,4	m	L	2	m

L	Depth	
Re	Reynolds Number	
Velovity for given area		
Area	5,12	m2
Flow	0,00575	m3/s
Velovity	4,042969	m/h

Loss in Filter at 23 l/s
3,5
3
2,5
2
1,5
1
0,5
0
Total Depth of Filter (m)
0
0,034227448
0,142557279
0,667718756
Pressure Loss (m)
Loss in Filter at 23 l/s

Appendix W:

Theoretical Results and Graphs For Clean Water

Major Losses Due to Friction	
Flow	0,023
Viscosity	1,31E-06
K	0,000015

Plant Altercatioins	#
Intake Pumps: 1 or 2	1
Filters in operation: 3 or 4	4
UV in operation: 1 or 2	1

Reference	Section	Diameter (m)	Pipe Length/Section (m)	Split Flow? Yes/No	Splint into	Split Flow (m^3/s)	Reduced flow? Yes/No
Clean Water	Filter pump to collection	0,08	0,295	yes	4	0,00575	no
		0,1	1,966	yes	4	0,00575	no
	Filter 4 to 3	0,1	0,270	No	2	0,023	yes
		0,2	1,754	No	1	0,023	yes
	Filter 3 to 2	0,2	1,900	No	1	0,023	yes
	Filter 2 to 1	0,2	1,900	No	1	0,023	yes
	To UV Splt	0,2	7,233	no	1	0,023	No
	Straight UV	0,2	1,220	No	1	0,023	no
		0,3	0,877	No	1	0,023	no
	UV			no	1	0,023	Yes
	Side UV	0,2	1,624	No	1	0,023	no
		0,3	1,406	No	1	0,023	no
	UV			No	1	0,023	Yes
	To Storage	0,3	1,495	No	1	0,023	no

% of Total flow (0-100)	Reduced Flow (m^3/s)	Area (m)	Velocity (m^2/s)	D(h)	Re	K	K/D(h)	1	f	Repatitions	Major Loss Per Split	Total Major loss
100	0,00575	0,005027	1,143926	0,08	69858,09	0,000015	0,000188	0,999793	0,02019	4	0,00496374	0,019854946
100	0,00575	0,007854	0,732113	0,1	55886,47	0,000015	0,00015	0,999649	0,020929	4	0,01123885	0,044955406
25	0,00575	0,007854	0,732113	0,1	55886,47	0,000015	0,00015	0,999649	0,020929	1	0,00154302	0,001543019
25	0,00575	0,031416	0,183028	0,2	27943,23	0,000015	0,000075	0,999256	0,024042	1	0,00036004	0,000360039
50	0,0115	0,031416	0,366056	0,2	55886,47	0,000015	0,000075	0,999551	0,020649	1	0,00133976	0,00133976
75	0,01725	0,031416	0,549085	0,2	83829,7	0,000015	0,000075	0,999703	0,019017	1	0,0027761	0,002776098
100	0,023	0,031416	0,732113	0,2	111772,9	0,000015	0,000075	0,999805	0,017993	1	0,01777666	0,017776658
100	0,023	0,031416	0,732113	0,2	111772,9	0,000015	0,000075	0,999805	0,017993	1	0,00299843	0,00299843
100	0,023	0,070686	0,325383	0,3	74515,29	0,000015	0,00005	0,99962	0,019356	1	0,00030535	0,000305353
100	0,023	0	0	0	0	0,000015	0	1	0,021	1	0	0
100	0,023	0,031416	0,732113	0,2	111772,9	0,000015	0,000075	0,999805	0,017993	1	0,00399009	0,003990086
100	0,023	0,070686	0,325383	0,3	74515,29	0,000015	0,00005	0,99962	0,019356	1	0,00048963	0,000489629
0	0	0	0	0	0	0,000015	0	1	0,015	1	0	0
25	0,023	0,070686	0,325383	0,3	74515,29	0,000015	0,00005	0,99962	0,019356	1	0,00052063	0,000520629

k-total for Minor Loss	Minor Loss for Diameter Transition flow	Minor Loss per Split	Total Minor loss	Unit Process	Total Major+Minor Loss
5,145775344	0,025775344	0,3432004	1,37280164	0	1,392656584
1,2	0	0,0327822	0,13112882	0	0,176084229
0,642435097	0,042435097	0,0175504	0,01755037	0	0,019093385
0	0	0	0	0	0,000360039
0	0	0	0	0	0,00133976
0	0	0	0	0	0,002776098
2,28	0	0,0622862	0,06228619	0	0,080062849
0,701591047	0,021591047	0,0191664	0,01916642	0	0,022164848
1,1		0,0059359	0,00593587	0	0,006241226
0	0	0	0	0	0,01
0,621591047	0,021591047	0,0169809	0,01698094	0	0,020971024
1,7	0	0,0091736	0,00917362	0	0,00966325
0	0	0	0	0	0
1,8	0	0,0097132	0,00971325	0	0,010233876
				Sum	1,751647167

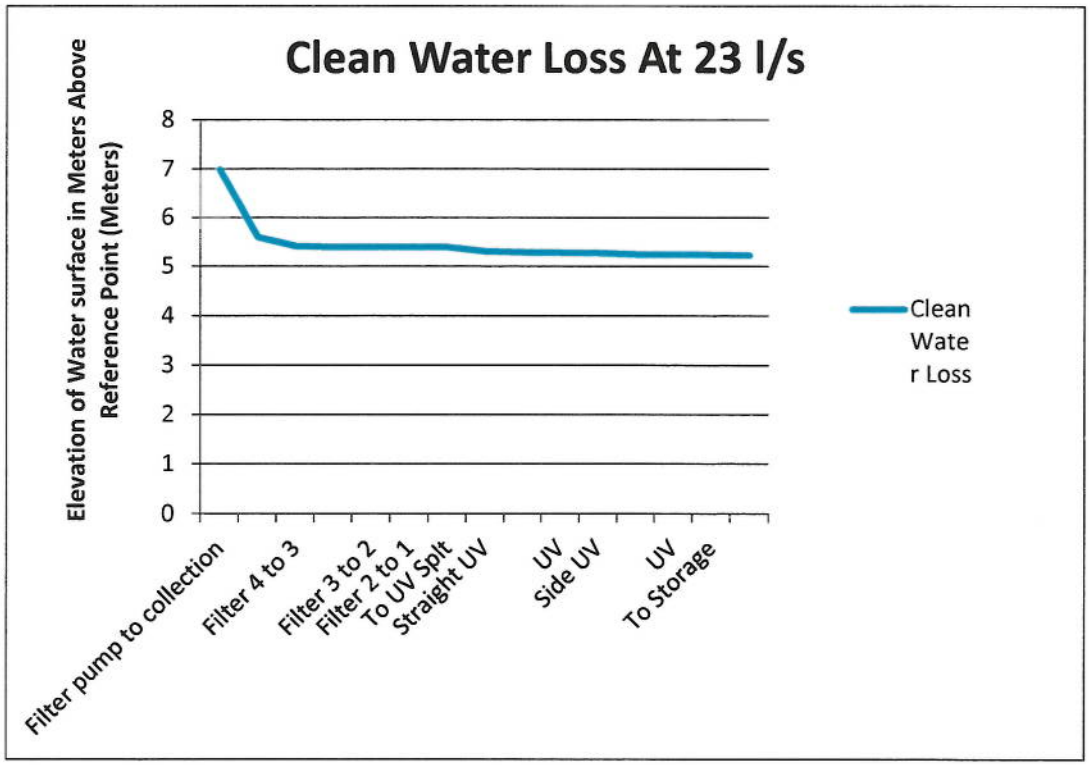
Clean Water Loss At 23 l/s
Elevation of Water surface in Meters Above Reference Point (Meters)
8
7
6
5
4
3
2
1
0
Filter pump to collection
Filter 4 to 3
Filter 3 to 2
Filter 2 to 1
To UV Splt
Straight UV
UV
Side UV
UV
To Storage
Clean Wate r Loss

Appendix X:

Data For Filtralite MC Filter Media

Instructions and recommendations for Filtralite® MC 0.8-1.6 mm

1 General

Filtralite® MC 0.8-1.6 mm is a filter media for purification of water and residual and industrial effluents. It is made of expanded clay granules that are crushed and sieved. The porous sharp edged grains have strong resistance against mechanical abrasion and a low acid solubility.
Filtralite® MC 0.8-1.6 mm is an inert ceramic material and complies with requirements of EN 12905.

2 Application of Filtralite® MC 0.8-1.6 mm

Filtralite® MC 0.8-1.6 mm can be used as filter media both in conventional deep bed filters for particle removal and in biological filters. It can be utilized in single media filters as well as top layer in multi media filters.
Filtralite® MC 0.8-1.6 mm can be applied in both open and closed filters for treatment of ground water, surface water, seawater and effluents.

3 Recommendations for filter design

3.1 Biofilters

Due to its porous structure and large specific surface area Filtralite® MC 0.8-1.6 mm is ideal as support media for biofilms in fixed bed biofilters. Biofilters are normally single media filters. To obtain biological degradation of substances in the water, it is important that the contact time (the time the water takes to pass through the filter) is long enough. The needed Empty Bed Contact Time (EBCT) is dependent of which matter to be removed, concentration, temperature etc. Experiences from different plants and tests show that the EBCT should not be any shorter than 15-20 minutes. It is recommended to run a pilot test to define the correct EBCT for that specific water.

3.2 Multi media filters

Down flow multi media filters have the advantage compared to single media filters that the total head loss is lower and the storage capacity of the filter is higher. The result of this is that the filter can be operated longer before backwash is needed.

The most normal multi media filter, dual media filter, has a coarse upper layer and a finer lower layer. When designing a dual media filter it is important that the filter materials have different settling velocities, so that the materials will separate after backwash. The lower layer filter media must be heavier and have smaller grains than the upper layer media.

Recommended dual media filter design using Filtralite® MC 0.8-1.6 mm is:

Filter media	Grain size [mm]	Layer depth [mm]
Filtralite® MC 0.8-1.6 mm	0.8-1.6	500-900
Quartz sand	0.5-0.8	400-800

Filtration rate for potable water dual media filters designed according to the table above is normally 5-15 m/h. For other applications filtration rate can be lower or higher.

4 Installation and start up

4.1 Installation

Filtralite® MC 0.8-1.6 mm can be delivered either in big bags or bulk. When delivered in big bags the installation of the material can be done by lifting the big bag over the filter cell by a crane or fork lift and then cut the bottom of the big bag so that the filter media falls into the filter. To avoid any dispersion of dust attached to the filter media, water should be filled into the filter cell before the Filtralite® MC 0.8-1.6 mm is filled in. Most of the dust will then be kept in the water.

If the material delivered in big bags is stored after it is supplied to the plant, make sure to store the big bags on pallets to avoid degradation of the bottom of the big bags and for reducing the risk for contamination of the filter media. The big bags should not be stored outdoors for a longer period than 3 months without being covered by tarpaulin or similar to avoid degradation of the big bags. The big bags should also be kept out of direct sunlight.

For delivery in bulk the Filtralite® MC 0.8-1.6 mm media can be installed by pneumatically blowing it into the filters. To avoid too much abrasion to the media through the hose/pipe, the diameter of the hose should not be smaller than 4". It is also important to avoid bends. If bends are necessary they should have as large radius as possible. To avoid dust in the area where the filters are located, water should be added to the hose (1/2" hose with water pressure about 6 bar). The water should be connected to the hose around 5-10 m before the end of the hose, to allow all dust to be wetted. The total blowing distance (length of hose) should not exceed 60 meters.

4.2 Start up

After the Filtralite® MC 0.8-1.6 mm has been installed in the filter, the filter should be filled with water to above the top of the filter media. The filter media should be wetted for about 24 hours before washing of the filter media starts. This period for soaking the material can be combined with disinfecting the filter media by adding to the water a disinfectant.

After the media is soaked it should be backwashed properly to get rid of dust etc. If the backwash can be operated manually, the first backwash can be carried out by only water that flushes through the filter until the outlet wash water is clean. If the backwash system can only operate at a fixed procedure, this backwash procedure should be repeated until the water is clean. After the filter media has been cleaned, the filter can be put into operation.

5 Operation

5.1 Filtration

In filtration mode Filtralite® MC 0.8-1.6 mm provides low head loss and high storage capacity for sludge, resulting in long filter runs between each backwash. The following diagram shows the correlation between head loss and backwash velocities for different water temperatures.

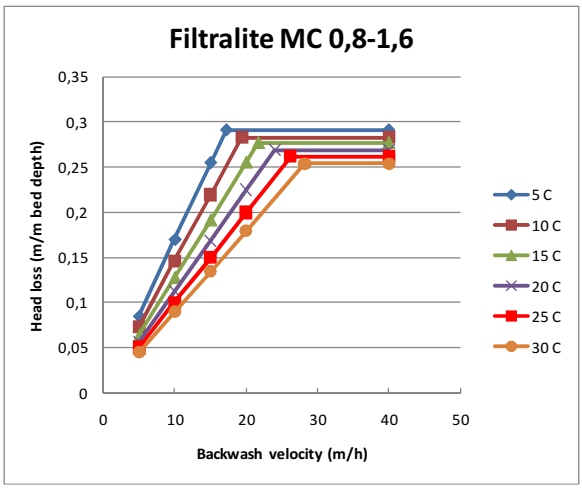

5.2 Backwash

During operation sludge will attach to the filter and the head loss through the filter will increase. The filter has to be backwashed to clean the filter media, when the head loss reaches the maximum level allowed in the filter, or the filtrate reaches a break through of particles.

For dimensioning of the backwash system it is important to know the water velocity needed for fluidizing the filter media. The following diagram shows the expansion of Filtralite® MC 0,8-1,6 during backwash for different water velocities and temperatures.

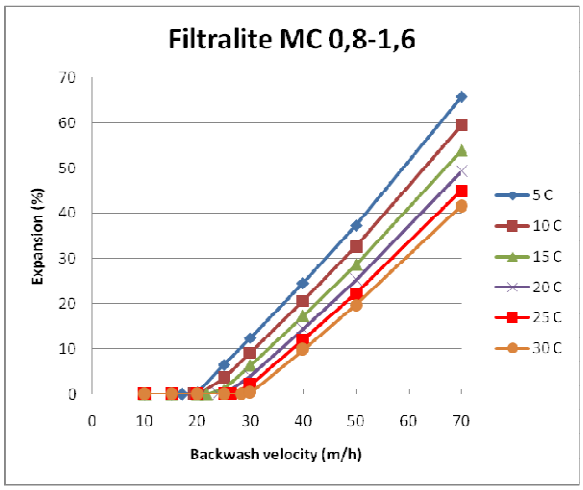

Backwashing of dual media filters has to be carried out in a way that secures that the layers will be separated after the backwash. This is usually obtained by using only water above fluidization velocity for the final stap of the backwash procedure. The most recommendable way of backwashing a dual media filter with Filtralite® MC 0.8-1.6 mm as top layer is collapsed pulse backwashing, carried out as follows:

1. Lower the water level to approx. 10 cm above the top of the filter media.
2. Flush with approx. 9 m/h water in combination with 25-35 m/h air till the water level is approx. 30 cm below overflow.
3. Pause for 120 seconds.
4. Flush with water with velocity which gives the material an expansion of 15-30% in 600 seconds, or till the backwash water is clean.

If this procedure does not provide sufficient cleaning, step 2 and 3 can be repeated before the final step 4.

5.3 Putting out of operation

If the filter should be put out of operation it is important to wash the filter intensively before it is stopped. The filter can then stay water filled for around a couple of weeks. If the filter is to be taken out of operation for a longer period the water should be drained off.

5.4 Restart of filter after standstill or re-fill of filter media

When restarting a filter after it has been out of operation for a period, the filter has to be backwashed intensively several times. If the filter has been stopped for re-fill of filter media the procedure for start-up of a new filter (section 4.2) should be followed.

Appendix Y:

Enlarged Theoretical Vs. Measured Pressure Loss Graphs

Flow 23 l/s

	Raw Water	Loss		Post pump	
	P 2 Collect	1,1522948		Collection P	9,0857052
		0,05			
	Static	0,129			
		0,05			
		10,238			
	0	10,238		10,238	
Piping from intake pump to	1,55	9,20309028	1,152	9,086	
Pump 1 connection to	2,79	9,18446843	0,01	9,076	0,65269486
pump 2 addition	3,04	9,18440904	0,01	9,066	0,219
Pump 2 connection to	3,60	9,18440904	0,01	9,056	
Pump 3 connection to	9,38	9,16390238	0,01	9,046	
PE Piping pre Static Mixer	10,67	9,14336918	0,01	9,036	
Static Mixer	10,67	8,65314289	0,129	8,907	
PE Piping Post Static mixer	11,35	8,64317721	0,005	8,902	
Steel piping to branch to	13,61	8,64128839	0,005	8,897	
Piping to each filter	14,50	8,54480205	0,01	8,887	
Filter branch 1 to branch 2	14,79	8,54453468	0,005	8,882	
	16,06	8,54267542	0,005	8,877	
Filter branch 2 to 3	17,83	8,54142945	0,01	8,867	
Filter branch 3 to 4	18,26	8,54130632	0,005	8,862	
	19,70	8,53177357	0,005	8,857	

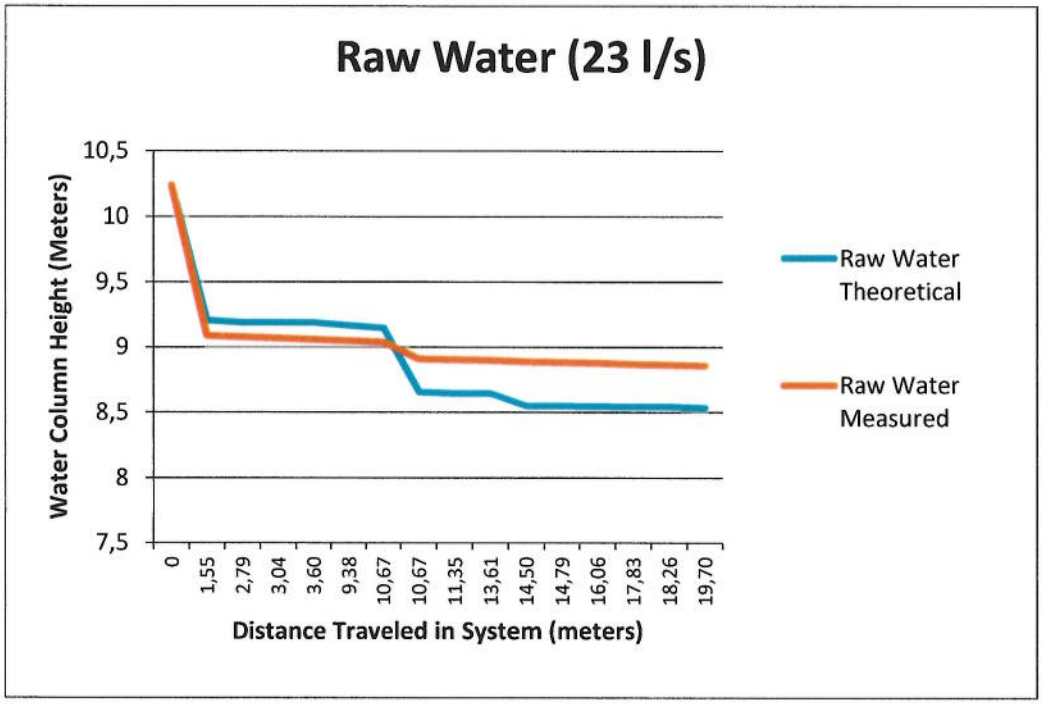

Clean Water	Loss		
Filter	1,745		
Check Valve	1,64	Pump to collection	0,836
To Tank	0,0192		

	0	6,985		6,985
Filter pump to collection	0,29	5,59234342	0,418	6,567
	2,26	5,41625919	0,418	6,149
Filter 4 to 3	2,53	5,3971658	0,00083636	6,14816364
	4,28	5,39680576	0,00083636	6,14732727
Filter 3 to 2	6,18	5,395466	0,00083636	6,14649091
Filter 2 to 1	8,08	5,39268991	0,00083636	6,14565455
To UV Splt	15,32	5,31262706	0,00083636	6,14481818
Straight UV	16,54	5,29046221	0,00083636	6,14398182
	17,41	5,28422098	0,00083636	6,14314545
UV	17,41	5,27422098	0,01	6,13314545
Side UV	19,04	5,25324996	0,00083636	6,13230909
	20,44	5,24358671	0,00083636	6,13147273
UV	20,44	5,24358671	0,00083636	6,13063636
To Storage	21,94	5,23335283	0,00083636	6,1298

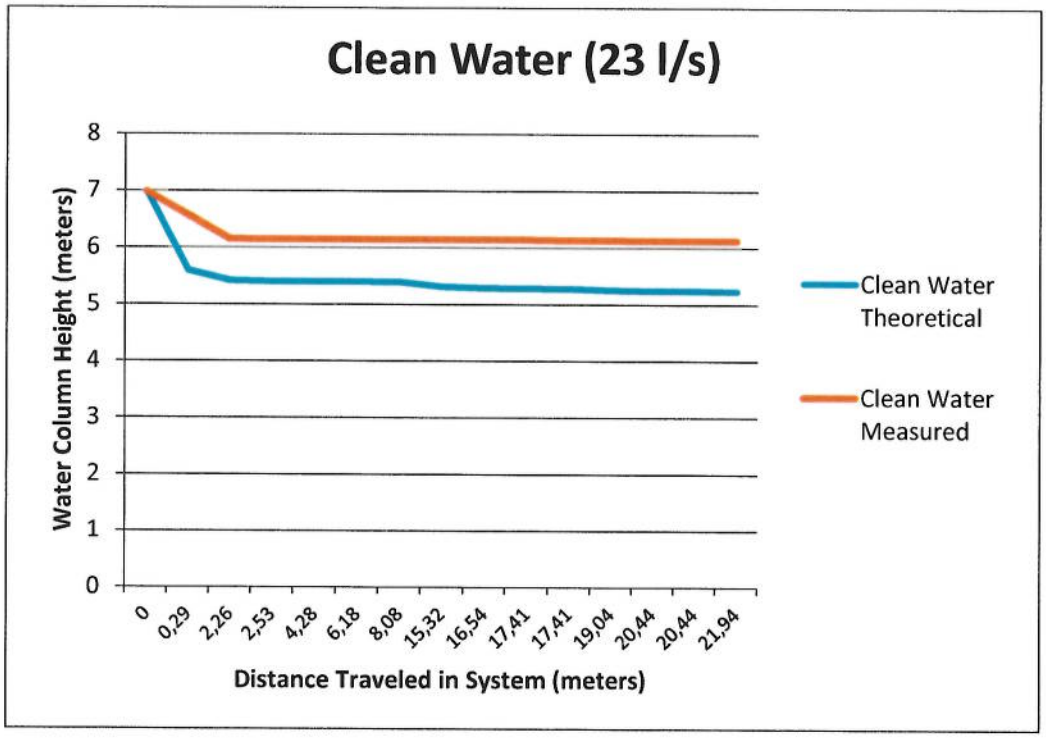

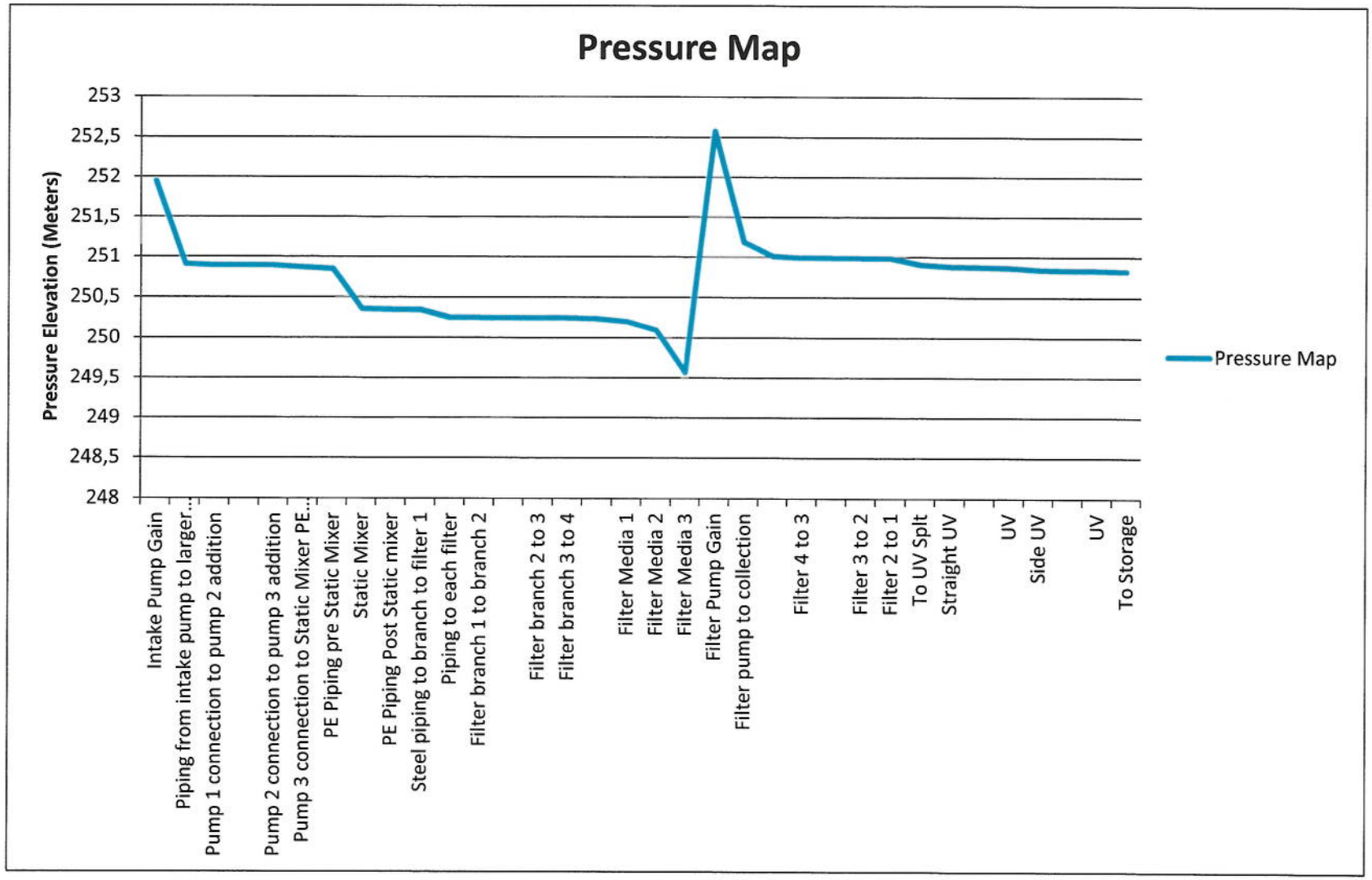
Pressure Map
Pressure Elevation (Meters)
253
252,5
252
251,5
251
250,5
250
249,5
249
248,5
248
Intake Pump Gain
Piping from intake pump to larger...
Pump 1 connection to pump 2 addition
Pump 2 connection to pump 3 addition
Pump 3 connection to Static Mixer PE...
PE Piping pre Static Mixer
Static Mixer
PE Piping Post Static mixer
Steel piping to branch to filter 1
Piping to each filter
Filter branch 1 to branch 2
Filter branch 2 to 3
Filter branch 3 to 4
Filter Media 1
Filter Media 2
Filter Media 3
Filter Pump Gain
Filter pump to collection
Filter 4 to 3
Filter 3 to 2
Filter 2 to 1
To UV Splt
Straight UV
UV
Side UV
UV
To Storage
Pressure Map

		Pressure
		Elevation
Intake Pump Gain	9,024522	251,944522
Piping from intake pump to	1,034909724	250,909612
Pump 1 connection to pump 2 addition	0,018621846	250,89099
	5,93907E-05	250,890931
Pump 2 connection to	0	250,890931
Pump 3 connection to	0,020506664	250,870424
PE Piping pre Static Mixer	0,020533192	250,849891
Static Mixer	0,490226293	250,359665
PE Piping Post Static mixer	0,009965683	250,349699
Steel piping to branch to	0,00188882	250,34781
Piping to each filter	0,096486335	250,251324
Filter branch 1 to branch 2	0,000267375	250,251057
	0,001859255	250,249197
Filter branch 2 to 3	0,001245977	250,247951
Filter branch 3 to 4	0,000123125	250,247828
	0,009532754	250,238296
Filter Media 1	0,034227448	250,204068
Filter Media 2	0,108329831	250,095738
Filter Media 3	0,525161477	249,570577
Filter Pump Gain	6,63	252,58
Filter pump to collection	1,392656584	251,187343
	0,176084229	251,011259
Filter 4 to 3	0,019093385	250,992166
	0,000360039	250,991806
Filter 3 to 2	0,00133976	250,990466
Filter 2 to 1	0,002776098	250,98769
To UV Splt	0,080062849	250,907627
Straight UV	0,022164848	250,885462
	0,006241226	250,879221
UV	0,01	250,869221
Side UV	0,020971024	250,84825
	0,00966325	250,838587
UV	0	250,838587
To Storage	0,010233876	250,828353