NTNU
Norwegian University of
Science and Technology

Alternative CO2 Removal Solutions for the LNG Process on an FPSO

Erlend Lunde Haugen

Product Design and Manufacturing
Submission date: June 2011
Supervisor: Truls Gundersen, EPT

Norwegian University of Science and Technology
Department of Energy and Process Engineering

Problem Description

The main objective of this Master thesis is to propose a CO_2 handling system for the LNG process on an FPSO for varying CO_2 contents in the feed gas by selecting and possibly combining various technologies such as membranes, adsorption (such as molecular sieve) and chemical absorption. Rather than detailed cost calculations, these evaluations should focus on energy consumption and process complexity. The connection between the CO_2 handling system and the overall energy system (heating, cooling and power) of the FPSO should also be discussed.

Assignment given: 4th of February 2011

Supervisor: Truls Gundersen, EPT

Norwegian University
of Science and Technology
NTNU

Department of Energy
and Process Engineering

EPT-M-2011-Nr 20

MASTER THESIS

for

Stud.techn. Erlend Haugen
Spring 2011

Alternative CO_2 Removal Solutions for the LNG Process on an FPSO

Alternative løsninger for CO_2 fjerning ved LNG prosesser på en FPSO

Background

LNG is the fastest growing energy transportation scheme in the world, and ship based transport of LNG is expected to become as important as pipeline transport. In this market, Höegh LNG is today operating LNG carriers and a floating delivery terminal while the company at the same time looks at new and innovative solutions in the marine chain of production – shipping – delivery of natural gas.

The marine value chain starts with floating production (FPSO; Floating Production, Storage and Offloading), continues with the ship based transport (LNG carrier) and ends with the floating re-gasification terminal, either as shuttling SRV ships (Shuttle and Re-gasification Vessel) targeting medium gas volumes and short to medium transport distances, or as a permanently located FSRU vessel (Floating Storage Re-gasification Unit) for medium to large gas volumes.

Höegh LNG is currently in the business of designing an FPSO, where the Niche process is regarded as a good liquefaction technology for offshore applications where energy efficiency to some extent is sacrificed for reduced process complexity, reduced weight & space requirements, and increased safety. A last year student project in the fall 2010 discussed possible design improvements and different options for handling extreme conditions related to depletion scenarios (reduced feed pressure) and large feed gas CO_2 compositions. This Master thesis will focus on different CO_2 handling solutions for varying feed gas CO_2 contents.

Motivation

The removal of CO_2 from the natural gas before liquefaction is required to avoid solids formation that will plug process equipment. This is an inherent problem in LNG processes both for onshore and offshore situations, and the normal requirement is to reach a 50 ppm level for CO_2 before liquefaction. The traditional process for CO_2 removal is amine absorption; a process that requires considerable space, weight and energy (mostly heat). Alternative processes for CO_2 removal include adsorption, membranes and cryogenic processes. With large CO_2 contents in the feed gas, CO_2 removal represents an important part of an FPSO LNG process; and this is the main motivation behind this Master thesis. Very low concentrations of CO_2 (such as in the range

0.1 – 0.5 mole%) in the feed gas also represent an interesting problem, where the hypothesis proposed is that mol-sieve units could be used to combine water removal (drying) and CO_2 capture.

Objective

The main objective of this Master thesis is to propose a CO_2 handling system for the LNG process on an FPSO for varying CO_2 contents in the feed gas by selecting and possibly combining various technologies such as membranes, adsorption (such as mol-sieve) and amine absorption. Rather than detailed cost calculations, these evaluations should focus on energy consumption and process complexity. The connection between the CO_2 handling system and the overall energy system (heating, cooling and power) of the PFSO should also be discussed.

The following issues should be considered in the Master thesis:

1. A literature study should be conducted, focusing on different technologies for CO_2 removal from natural gas before liquefaction (i.e. down to 50 ppm). This study should emphasize technologies that may be regarded as candidates for offshore applications.

2. The most promising technologies from the literature study should be briefly described with flowsheet, process mechanisms, and key operating parameters.

3. Advantages and disadvantages of the various technologies described in the previous point should be discussed, and possibilities for combining some of these technologies should be explored. In the case of using membranes, one should discuss what to do with the permeate that has a (relatively) high CO2 content.

4. The special case of very low CO_2 concentration in the feed gas should also be addressed. Here, the use of mol-sieve for combined water and CO_2 removal has been proposed as a feasible option. However, the regeneration gas will reach a peak in CO_2 content and this may cause problems for the gas turbine utilizing this gas. These problems should be analyzed in the case of 0.1 – 0.5 mole% CO_2 in the feed gas.

5. The main task of this thesis is to propose CO_2 handling systems for a range of CO_2 contents in the feed gas, possibly by combining technologies. Process simulations and other means of quantifications are required to address this point. The evaluation between alternative solutions should be based on energy consumption and process complexity.

6. Finally, conclusions/recommendations should be made regarding the CO_2 handling system, primarily for the two extreme cases of low and high CO_2 content. It would also be of interest to identify the different ranges of CO_2 contents that can be handled by the same capture system (i.e. some kind of sensitivity analysis).

-- " --

Within 14 days of receiving the written text on the Master thesis, the candidate shall submit a research plan for his project to the department.

When the thesis is evaluated, emphasis is put on processing of the results, and that they are presented in tabular and/or graphic form in a clear manner, and that they are analyzed carefully.

The thesis should be formulated as a research report with summary both in English and Norwegian, conclusion, literature references, table of contents etc. During the preparation of the text, the candidate should make an effort to produce a well-structured and easily readable report. In order to ease the evaluation of the thesis, it is important that the cross-references are correct. In the making of the report, strong emphasis should be placed on both a thorough discussion of the results and an orderly presentation.

The candidate is requested to initiate and keep close contact with his/her academic supervisor(s) throughout the working period. The candidate must follow the rules and regulations of NTNU as well as passive directions given by the Department of Energy and Process Engineering.

Pursuant to "Regulations concerning the supplementary provisions to the technology study program/Master of Science" at NTNU §20, the Department reserves the permission to utilize all the results and data for teaching and research purposes as well as in future publications.

One – 1 complete original of the thesis shall be submitted to the authority that handed out the set subject. (A short summary including the author's name and the title of the thesis should also be submitted, for use as reference in journals (max. 1 page with double spacing)).
Two – 2 – copies of the thesis shall be submitted to the Department. Upon request, additional copies shall be submitted directly to research advisors/companies. A CD-ROM (Word format or corresponding) containing the thesis, and including the short summary, must also be submitted to the Department of Energy and Process Engineering

Department of Energy and Process Engineering, 31 January 2011

Olav Bolland	Truls Gundersen
Department ~~Manager~~ HEAD	Academic Supervisor

Contact Höegh LNG:

Project Engineer Lars Petter Revheim, Newbuilding and Technical Development, Höegh LNG AS, phone: +47 97 55 74 52 , e-mail: lars.petter.revheim@hoeghlng.com

Preface

This thesis is written as a final work of my two-year master in Mechanical Engineering, at the institute of Energy, Process and Flow Engineering.

The goal of this thesis has been to evaluate different CO_2 removal processes for the LNG FPSO designed by Höegh, with main focus being on energy and complexity.

I would like to thank my supervisor at NTNU, Professor Truls Gundersen for his support and guidance in completing my work. I would also like to thank Höegh LNG for the opportunity to be a part of this work and also my gratitude for the help I have received from Lars Petter Revheim, whom has given me feedback for my ideas and information when needed.

Trondheim, 24.06.2011

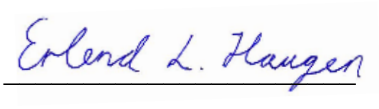

Erlend L. Haugen

Abstract

The Höegh LNG FPSO is designed for a CO_2 removal of a gas stream containing 12.3% CO_2 and uses a significant amount of space and energy for the purpose of removing the CO_2. It is a significant part of the LNG production chain and is also one of the more uncertain. This thesis will therefore look at possible designs for CO_2 removal of different CO_2 compositions.

The thesis aims to give an introduction of some CO_2 removal technologies currently available and seek to find the most suitable for different CO_2. The work of this thesis is comprised of a literature study and evaluation of different aspects of these technologies. The evaluation includes discussing the aspects of the technologies and also collecting comparative data.

There are three main technologies for CO_2 removal; amine, membrane and molecular sieve. These were chosen from the literature study to be most suitable for removal of CO_2 for LNG production, either alone or in combination. Two combinations are most relevant, one is combining amine and membrane, and the other is combining amine and molecular sieve.

Both the molecular sieve and the membrane have certain issues, which may limit their usage. The molecular sieve uses a regeneration gas, which contains significant amounts of energy and should therefor be utilized in order to prevent large energy losses. The membrane has a permeate gas which contains around 40% methane together with the CO_2 and therefore raise some issues as to handling this gas. The best solution is to use both of these gases as fuel for the turbine. This however requires the turbine design to be adjusted accordingly.

Only 3 technologies are suggested used for CO_2 removal at different levels of CO_2 content. The molecular sieve is suggested used for CO_2 compositions of less than 0.1%. The amine solution is suggested used for CO_2 compositions between 0.1% and 6%. The membrane-amine solution is suggested for CO_2 compositions above 6% because of the high bulk removal capability of the membrane and the ability for the amine process to remove CO_2 on the lower part of the scale.

Sammendrag

Höegh sin LNG FPSO er designet for å prosessere gass med et CO_2 innhold på 12,3% og har satt av mye areal og energi til denne prosessen. CO_2 fjerningsprosessen er en vesentlig del av produksjonskjeden for LNG ettersom CO_2 innholdet må reduseres til 50ppm for å ikke skade materialer under flytendegjøringsprosessen for gassen. Denne oppgaven vil derfor ta for seg ulike design for CO_2 fjerning ved forskjellige CO_2 komposisjoner.

Denne oppgaven har som mål å gi en introduksjon til utvalgte CO_2 fjernings teknologier. Denne oppgaven består av et litteraturstudie og evaluering av dataene som er samlet inn. Evalueringen tar for seg de forskjellige aspektene ved teknologiene og fremskaffer data som brukes som sammenligningsgrunnlag.

Det er tre relevante teknologier som det fokuseres på. Disse er amin, membran og mol-sieve. Det blir også nevnt kryogene prosesser, men blir ikke vurdert nærmere siden det ikke har de egenskapene som passer inn i systemet for øvrig. Det blir også vurdert kombinasjoner av disse tre mest aktuelle teknologiene, hvorav amin-membran og amin- mol-sieve virker mest lovende. Fordeler og ulemper ved teknologiene vil også bli diskutert.

Både mol-sieve og membran teknologiene har komplikasjoner som begrenser bruksmulighetene. Mol-sieve bruker en regenererings gass som inneholder relativt store mengder energi og burde derfor bli brukt for å nyttiggjøre denne energien. Membranen har en permeat gass som inneholder rundt 40% hydrokarboner sammen med CO_2 og dermed gjør det mer komplisert å håndtere denne gassen. Den beste løsningen for begge disse er å bruke gassene som brensel i kraftturbinene, dette krever derimot endringer i design for å håndtere drivstoff med lavere brennverdi.

Tre teknologier er foreslått for å håndtere spennet av CO_2 innhold. Mol-sieve er foreslått for håndtering av gasser med CO_2 innhold lavere enn 0,1%. Amin oppsettet er ment for CO_2 innhold mellom 0,1% og 6%. Membran-amin oppsettet er beregnet på CO_2 innhold over 6% grunnet den gode bulk fjernings egenskapene til membran teknologien. Disse teknologiene vil selvsagt overlappe litt og det vil dermed være nødvendig med nærmere kostnadsanalyser.

Table of contents

List of Figures

List of Tables

Nomenclature

Abbreviations

Capex – Capital expenditure

CFZ – Controlled Freeze Zone

CH_4 – Methane

CO_2 – Carbon dioxide

DEA – Di Ethanol Amine

LNG – Liquid Natural Gas

FPSO – Floating Production Storage and Offloading

GE – General Electric

H_2O – Water

H_2S – Hydrogen Sulphide

LHV – Lower Heating Value

MDEA – Methyl Di Ethanol Amine

MEA – Mono Ethanol Amine

MJ – Mega Joule

MMSCFD – Million Metric Standard Cubic Feet per Day

MS – Molecular Sieve

MW – Molecular weight (g/mole)

N_2 – Nitrogen

Opex – Operational expenditure

Ppb – parts per billion

Ppm – parts per million

TEA – Tri Ethanol Amine

Prefixes

k	kilo	10^3
M	Mega	10^3

Letters

α	Selectivity
P	Permeability

Chapter 1 - Introduction

This thesis will focus on CO_2 removal from natural gas designed for an LNG FPSO. It will include a literature study of different technologies and analyses of the preferred technology for different compositions of the natural gas. Two cases will be of particular interest, one being extremely high CO_2 content the other being extremely low.

Three main types of separation technologies are used today; adsorption, absorption and physical separation such as membranes. In addition, there is some research being done on cryogenic separation. The most widely used separation technology for CO_2 removal is amine absorption and this is also used in the preliminary design of the LNG FPSO designed by Höegh LNG.

The motivation for focusing on CO_2 removal is due to the large consumption of power, heat and space. CO_2 content will also be one of the larger uncertainties in the LNG FPSO system. Natural gas can contain less than 1% CO_2, and as much as 80% has been known to occur, although typically it ranges from below 1% to around 10%. It is therefore complicated to design a process that will be efficient for all these cases.

Because the LNG FPSO design is under development, there is not yet a best practice that can be directly applied. It is however possible too draw on similarities from land based LNG gas processing. Especially those that operate with similar design goals.

This thesis aims to find applicable technologies and give a recommendation as to which technology has the best potential throughout the range of CO_2. This will all be done according to an LNG FPSO design and will focus on complexity and energy consumption.

Firstly the thesis will give information on background theory, and then view the suitability of the different technologies. After this, a review will be given of the possibility of combining the different technologies. Then a more in-depth analysis of complexity and energy consumption will be given in the chapter “Trends and Examples”. Towards the end of the thesis there is final discussion and some conclusions.

Chapter 2 - Process Descriptions

Several different cleaning/separation technologies can be applied in order to remove CO_2 from natural gas. These are all dependent upon certain conditions in order to be at its most efficient. This chapter intends to give an overview of different separation technologies applicable to CO_2 removal. It shall also give an overview of what are the most important attributes affecting the technologies and why it is necessary to focus on making this process more efficient. The chapter aims at finding the most suitable technologies for further analysis.

2.1 The Höegh LNG FPSO

2.1.1. Höegh LNG

Höegh LNG is a company that is mainly focused on the transportation of LNG and has done that for almost 40 years, starting with the delivery of the Norman Lady in 1973. The company is expanding through the value chain with developing both technology on the receiving and regasification end, and the production end. The focus of this thesis lies on the production end, with Höegh LNG's latest project working on an LNG FPSO. This is an ambitious project, which requires considerable technology and management to get all the production equipment placed on a single hull is challenging. The LNG FPSO utilizes liquefaction by the Niche technology to cool the gas down to -162 degrees Celsius.

2.1.2. Design goals

The LNG FPSO is designed to be a floating production unit placed in deep waters. It is not made for being moved around, but rather designed according to a certain gas field and then be placed there for the lifetime of the ship. The design has been focused on meeting the safety requirements and a large market. Also since space and weight allowances are limited the focus has been on choosing small and lightweight solutions such as the Niche liquefaction technology.

The design of the LNG FPSO has focused on a large CO_2 removal unit in order to handle the design CO_2 composition of 12.3 mol%. The goal for this unit is to find the most efficient solution possible with regards to total costs. There are challenges in

finding the right solution, as there is a large working region of the removal technology. It will have to remove CO_2 from a level of 12.3% down to 50ppm.

2.1.3. CO_2 removal

CO_2 removal is a molecule separation technology and is essentially the separation of molecules such as CO_2 and CH_4. It is used for purifying gases and thereby being able to extract the desired compound. For CO_2 removal, the goal is to have a clean CH_4 gas without too much undesirable compounds.

In the LNG production, separation is largely used to remove: heavy hydrocarbons, water, inhibitors and CO_2. This is done using different kinds of technology from a simple bed solution, which uses gravity, to the more complex amine process where the CO_2 is absorbed. The CO_2 separation will be the main focus in this work, although water separation will also be discussed, as the molecular sieve part will discuss combining CO_2 and water removal.

The CO_2 is removed in order to prevent freeze-out during the liquefaction process. If not separated sufficiently it will lead to CO_2 forming solids, which can block the heat exchangers and reduce the cooling capacity.

2.1.4. Possible CO_2 compositions

According to GasChem the global risk of encountering more than 1% CO_2 in a gas reservoir is less than 10% [1]. These gas fields are usually not treated for CO_2, as the CO_2 specifications are according to sales gas specification. It also states that it is less than 1% likely to encounter more than 20% CO_2. This means that it is useful having designs that are able to handle under 1% CO_2 and the chance of encountering very high CO_2 is relatively low. These are numbers on a global scale, there will however be regional differences, where it is more likely that one will encounter higher CO_2 contents. Most of the gas found with less than 1% CO_2 are encountered in Asia, and here in Norway there are a couple of gas fields that contain approximately 5% CO_2. Also when the CO_2 content is over 20% it is usually much higher, these fields will how ever be less profitable, and will not be handled in this thesis, as it will not be viable for the FPSO.

These figures show that there are large differences in CO_2 composition and it is difficult to say which of the gas fields are most suitable for the LNG FPSO. It is

however certain that it may be placed on gas fields with CO_2 less than 1% and also up to around 20%.

This thesis divides the CO_2 content in three categories, one is the gas which contains less than 1% the second contain from 1-10% and the last contain high levels of CO_2 typically between 10 and 20%.

2.1.5. Power production

The LNG FPSO uses gas 6 turbines for power production with a total output of 166 MW plus one spare [2]. These turbines give the power needed for operating the processes associated with the LNG production. Most of this power is needed for driving the 4 main compressors in the liquefaction section.

The waste heat is also utilized, mostly for the amine treatment process. 201 MW of waste heat can be recovered and distributed using hot steam, although the alternative design with 4 direct drive turbines may limit the waste heat recovery to 62 MW. The alternative design therefore limits the heat availability on-board and should be a factor taken into account when designing the system.

The gas used as fuel for the turbines come from different processes which either has some boil off or in other way has some extra hydrocarbons that is ideal for utilization as fuel gas. Below is a table showing the different fuel gas sources.

Normal Case	Amine Flash gas	LNG Carrier Off-loading	LNG storage boil-off	LNG Liquefaction	Liquefaction Recycle	Feed Gas
Ton/h	1.45	0	8.36	14.06	5.7	23.87

Table 1: Fuel gas sources [2]

All these sources have different fuel characteristics, but together they create a mixture, which is suitable for use in the gas turbines. This is much helped by the feed gas, which supplies a higher heating value than the rest of the sources.

Fuel requirements

The gas turbines can be designed to handle low values for LHV, but are often limited by the flexibility. The gas turbines might have a problem handling changes above 22% [3]. This may become a problem if the gas from the LNG liquefaction contains

too much nitrogen or if the amine flash gas becomes too large, which increases the CO_2 in the fuel.

A standard gas stream has a lower heating value of around 47 MJ/kg and may be affected by inert gases and also heavier hydrocarbons adding to the heating value. Both CO_2 and nitrogen have much the same affects, as they both lower the LHV because of their zero heating value and thereby resulting in a lower heating value for the total fuel gas. General Electric has managed to make a gas turbine run on a heating value of just 15 MJ/kg. They have also modified an LM6000, which is a common gas turbine, into operating on fuel with heating value between 18.6 and 20 MJ/kg [4]. This then gives some room for operating with lower heating value although the flexibility may become an issue.

2.2 Chemical Absorption Processes

Chemical absorption refers to a process that involves a solution containing a chemical, this chemical works as the reacting agent, creating a bond to the acid gas. The solution has an absorption capacity depending on the chemical, the solution strength, the temperature and the pressure. The most used chemical absorption process is the one using amines as a reacting agent. The process works by circulating the solution between an absorber column and a regeneration or stripping column. Acid gas is absorbed in the absorption column and then the solution is regenerated in the regenerator where the CO_2 is boiled off. After the regeneration the amine solution is ready for new use. Often a change in temperature or pressure is used for regenerating the solution.

There are multiple setups for the chemical absorption containing one or more columns for stripping or flashing off the acid gas. They differ in complexity and capacity, but all use the same principle of molecule removal utilizing two different conditions. Below are some common setups for chemical absorption processes, and are mostly related to use with the amine as the chemical reactant.

UOP

UOP has for almost 100 years been the leading international supplier and licensor for the petroleum refining, gas processing and petrochemical production. The company is mainly a patent holder and provider, with patent rights on several extensively used

technologies. UOP has several technologies within the chemical absorption category and also other CO_2 removal technologies [5].

Newpoint Gas

Newpoint gas is a worldwide provider of gas treating and processing equipment. They design and manufacture both standard and custom design modular units. With regards to this thesis they have systems for amine treating and CO_2 removal with membranes. They deliver skid mounted modular systems, which makes it easy to assemble.

Conventional

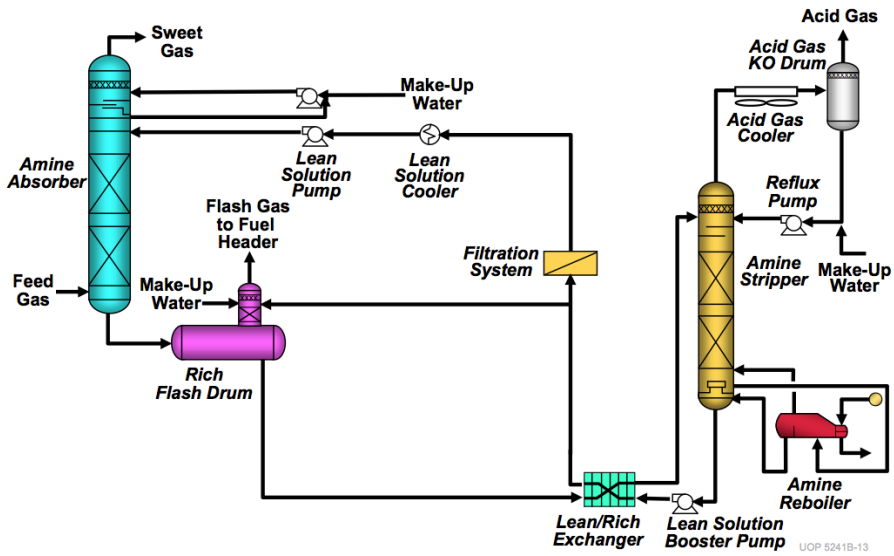

Figure 1: Conventional amine process [6]

Conventional setup is a simple, but efficient solution. It is able to produce gas with purity as low as 50ppm CO_2. It contains an absorption column, a rich flash drum to remove some of the CO_2 and an amine stripper column to remove the CO_2 down to a level in the amine solution so it can be used again.

1-stage

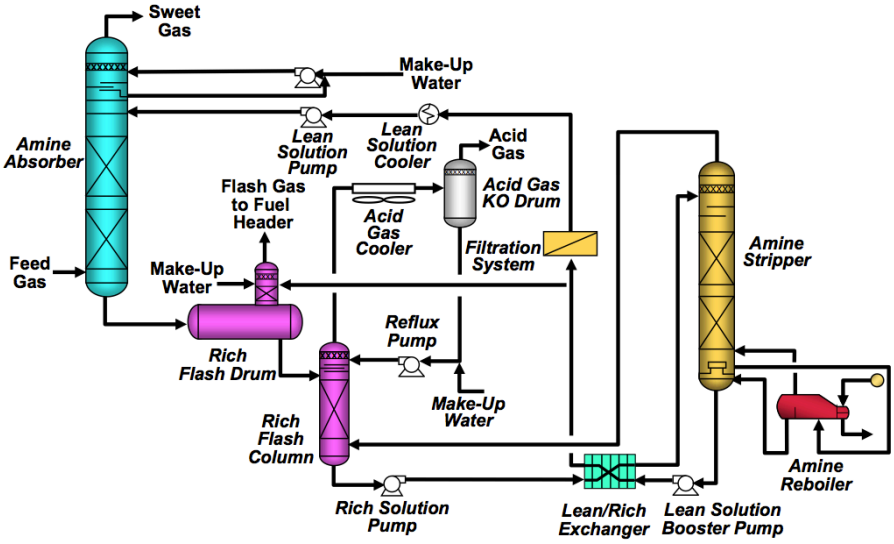

Figure 2: 1-stage amine process [6]

This process is ideal for use with LNG production as is can achieve CO_2 levels below 50ppm and utilizes thermal regeneration, which minimizes the heat requirement. Compared to the conventional setup, this offers a better CO_2 removal from the rich solution as it first has a rich flash column before entering the amine stripper, thereby decreasing the task needed in the stripper.

2-stage

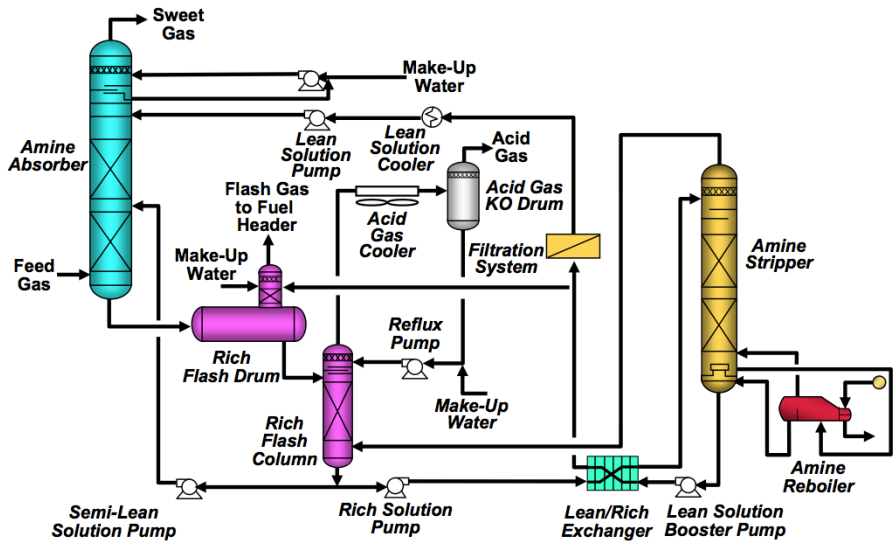

Figure 3: 2-stage amine process [6]

This 2-stage system has two streams entering the absorption column, one lean solution entering the top and a semi-lean solution entering midway. This reduces the required heat and power duty compared to the 1-stage system, and makes it more flexible under operation. This has big advantages when dealing with higher CO_2, because the semi-lean solution works as a bulk removal process while the lean solution removes the CO_2 further down.

Flash only

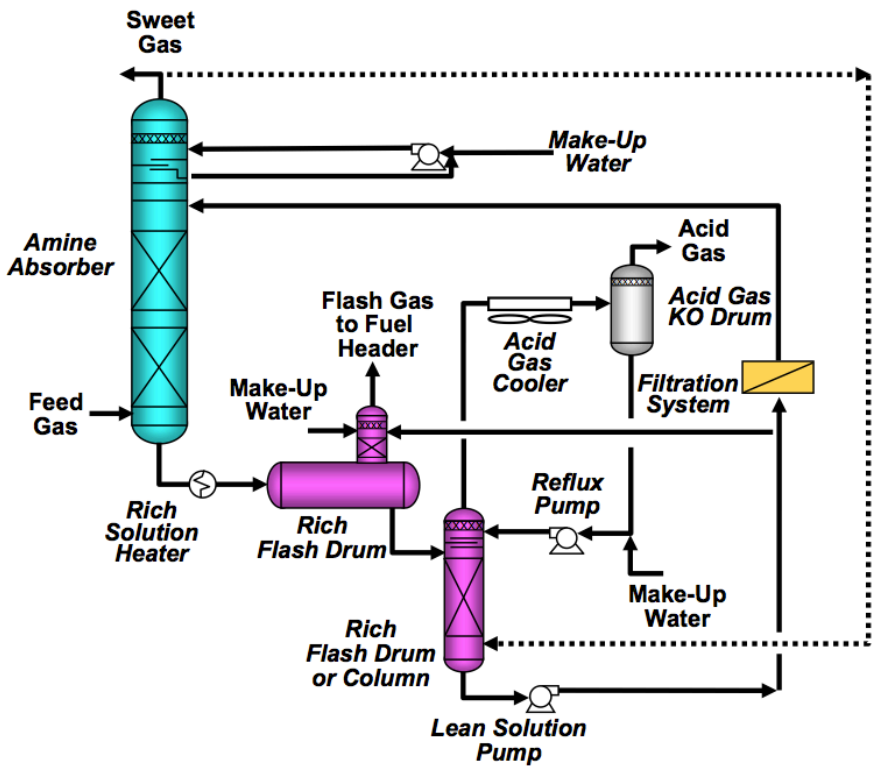

Figure 4: Flash only amine process [6]

This setup is the simplest and therefore the cheapest. It is mainly for bulk removal of CO_2 and therefor not applicable in this case. It has the lowest heat per removed mole of CO_2, but can typically only remove CO_2 down to half of initial level.

2.2.1. Amine process

The amine process uses an alkanolamine solution to absorb the CO_2 from the natural gas and thereby removing the CO_2. Numerous types of alkanolamines have been used, ranging from the early discovered TEA to the today most used, which is the MDEA. Solutions with DEA and MEA have also been used. The amine adsorption process is the most widely used and is capable of removing CO_2 across a large spectre of feed

gas content, from below 1% to above 50%. It is also able to remove CO_2 all the way down to LNG specifications, which makes it very versatile. The technology is also well proven and is often selected as a safe solution [7].

The amine process has some disadvantages especially with regards to placement on moving surfaces. The process is dependent on a solution and relying on this being evenly distributed in the absorption tower. The process also requires two large columns one for absorption and one for regeneration, these can often be very tall, and thereby giving the FPSO a high point of gravity.

Process description

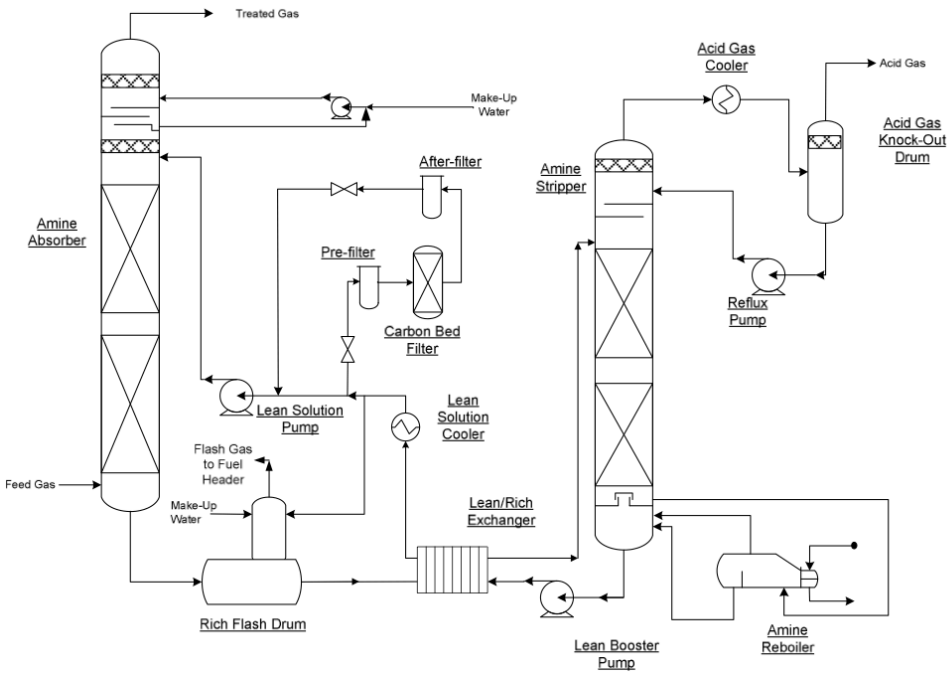

Figure 5: Amine Guard flow scheme [8]

2.2.2. Amine Guard FS

The Amine Guard FS system is owned by UOP and consists of 4 main amine setups, which are conventional, 1-stage, 2-stage and a flash only. These setups have handled CO_2 compositions from 2.3% to as much as 24%, thereby making the amine solution versatile [6].

2.2.3. Split stream amine process

The split stream process is something that has become more of an interest as the focus has become more upon energy saving. How efficient this improvement is depends on where the regeneration heat comes from. Heat is usually in excess when having onsite

power production. In the case where all the four large compressors are direct drive and no heat recovery units are installed on these, there will be less heat available. This solution will limit the available heat and thereby also limiting the capacity of the amine process. Also when the CO_2 content increases, the split stream may have increased its relative efficiency. It may in all cases lead to down sizing of the heat recovery unit and the flow and tubes of the heat transition medium.

In a split stream process one splits the stream in the stripper so that one has one stream that is lean and another, which is semi-lean. The semi-lean solution will be richer in CO_2 than the lean solution. The lean solution will then be used to acquire the required CO_2 concentration, while the semi lean solution will take care of the bulk of the removal from rich gas to semi lean gas.

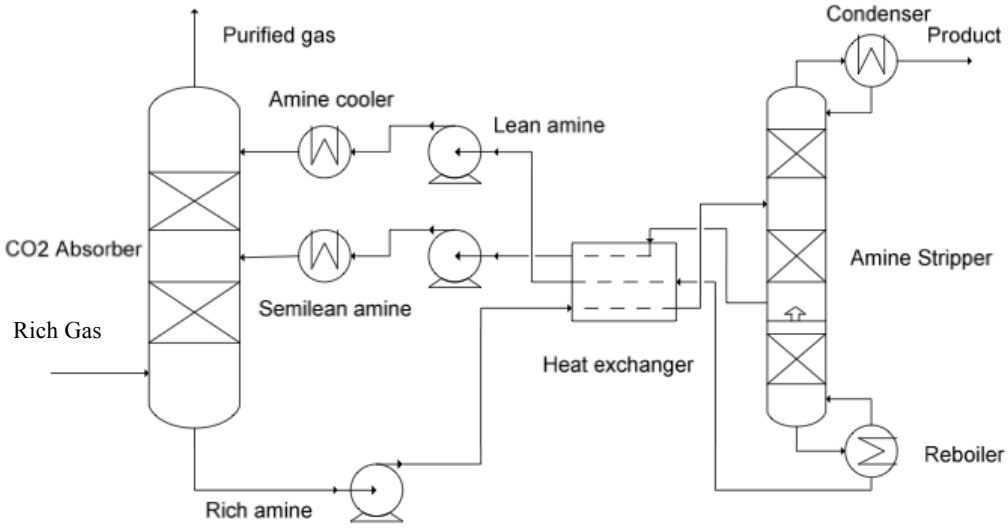

Figure 6: Flow sheet - split stream amine process [9]

2.2.4. Benfield process

The Benfield process was developed by Benson and Field in the 1950s and is currently licensed by UOP [5, 10]. The process uses an activated inhibited hot potassium carbonate solution to remove the acid gas from the natural gas. The

chemicals used are low cost and widely available. It functions much like the amine process except using a different solution. The process is widely used and is installed in over 50 natural gas plants.

Typical feed conditions are between 10 and 124 bar and between 5 and 35% of CO_2 and also above. It manages to produce down to very small levels of CO_2, such as needed for LNG production.

2.2.5. Selexol process

The Selexol process is another absorption process licensed by UOP. It was developed by DOW and uses a physical solvent made of a methyl ether of polyethylene glycol[11]. The process is most suitable for bulk removal of CO_2, which means it works well in removing high CO_2 content, but not down to the levels needed for LNG production. The design was however changed in order to remove gases down to the LNG specifications, although some operational issues. These issues have been solved and the design should be functioning according to specifications [11]. It should also be mentioned that the process could be used to reduce the dew point down to LNG specifications. However according to UOP the process is mostly suited for on-shore deployment [5].

2.3 Molecular Sieve Process

Molecular sieves, are adsorbents made up of aluminosilicate crystalline polymers called Zeolites [12]. The Zeolites are small pellets and come in different shapes and sizes to fit the specific purpose. The molecular sieve can be used to remove H_2O, methanol, CO_2, COS, mercaptans, sulphides, ammonia, aromatics and mercury. In the gas industry they are widely used for water removal, because they are able to remove molecules down to an extremely low level. The Zeolites contain small pores and is a cold separator typically functioning by retaining smaller molecules while the larger pass through.

The molecular sieve has a limited capacity as it works by molecules being absorbed or adsorbed onto the porous compound that is contained in the containments. As the capacity is reached, the sieve will require regeneration. In order to keep the sieve in operation, it will need regular regeneration, which is done by using a regeneration gas. The regeneration gas uses a different pressure or temperature compared to operating

condition. In the case of water removal the regeneration gas is heated so the water molecules more easily is desorbed from the bed.

According to UOP a molecular sieve can be used for peak shaving of the CO_2 in a natural gas plant. UOP have set a range of 0.1%-2% and a goal of <50ppm. Advantage of running CO_2 removal in the molecular sieve is that it will increase the equipment life and reduce foul odours [13].

Because the molecular sieve stores the CO_2 molecules between each regeneration, it is not an efficient solution on a per volume bases. This makes it an unproductive solution when dealing with larger amounts of CO_2 as the system will become very large and the flow rate of regeneration gas will become large as well.

Another difficulty concerning the regeneration gas is whether to remove it by flaring or use in the gas turbines. As the regeneration starts, there will be a peak in CO_2 and if the amount of becomes too large it will cause an upset to the gas turbines. It is therefor important to shed light on these limits and be aware of the operational characteristics of the turbines.

Weight is an important aspect when dealing molecular sieves and becomes much larger when dealing with large amounts of CO_2. There will not be any advantages with up scaling the process, as the weight is more or less linear as can be seen below:

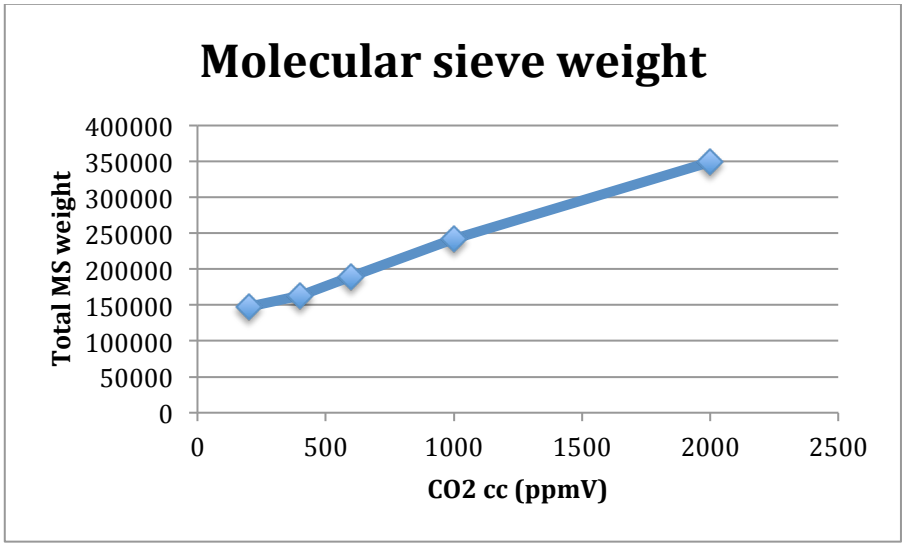

Figure 7: Graph showing Molecular Sieve weight [14]

The weight of the molecular sieve therefore becomes a problem when dealing with large amounts of CO_2, especially since this shall be installed on an FPSO and thereby requiring a higher floating capacity of the FPSO.

Another important factor with the molecular sieve is the consumption of regeneration gas, which can either be used as fuel for the gas turbines and thereby minimizing the energy losses. Another option is flaring some of the regeneration gas, but this will lead to large losses of energy, resulting in a much less efficient solution.

2.3.1. Process description

The process uses vessels containing Zeolites, which absorbs or adsorbs the molecules. These vessels are called sieves and the gas is sent through these and the unwanted molecules are removed during the flow through these vessels. When the process goes on, the molecular sieves are filled up and will need to be regenerated. Sending a regeneration gas through the molecular sieves with a different temperature regenerates the sieves usually cleans sieves. During this regeneration the molecules are desorbed due to changes in saturation level caused by different conditions.

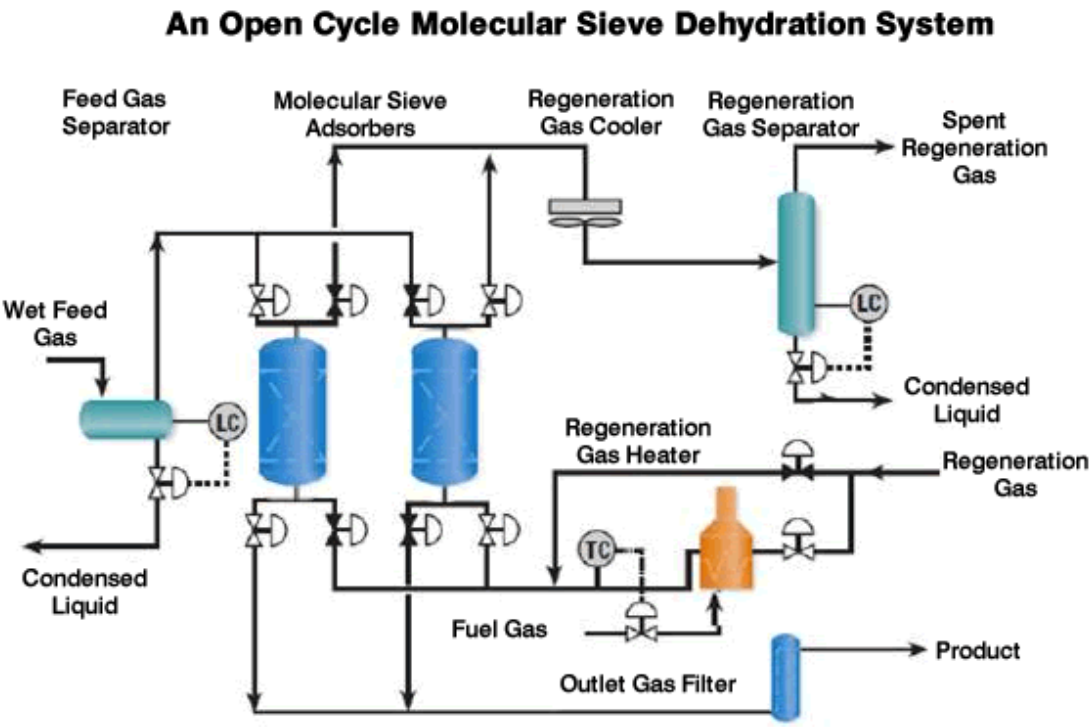

Figure 8: Molecular sieve flow diagram [15]

Figure 8 shows how the liquid is first removed, before sending the gas into the sieves. This is done in order to protect the sieves as liquids may damage the sieves. The two

sieves are installed because one of them is always operating while the other is regenerated. If the regeneration takes more time than it takes to fill the sieve up it will require an extra sieve to have two in regeneration.

2.3.2. Parameters

Size of the molecular sieve is determined by number of molecules removed and as the molecular sieve is a storage vessel for the molecules, an increase in molecules has a large effect. Gas flow also affects the size of the sieves, as the volume will need to be high enough in order to prevent too high velocities. The amount of CO_2 molecules also affects the regenerating gas stream, more molecules resulting in more regeneration gas, either by larger quantities per regeneration or by how often the sieves will require regeneration.

2.3.3. CECA molecular sieves

Ceca produces molecular sieves for removal of molecules ranging from H_2O to H_2S and CO_2. Ceca is a subsidiary of ARKEMA and has been supplying speciality chemical for over 80 years. They are also the second largest company in the world within molecular sieves. They manufacture more than 25,000 tons per year and their trade name for the molecular sieves is SELIPORTE. The molecular sieves have a standard design and the process is as described above.

CECA report

Höegh LNG has received a report from CECA on their molecular sieve technology. They have analysed different cases where CO_2 removal by molecular sieve can be applicable. The report discusses CO_2 levels between 200ppm and 2000ppm, which is almost non-existing CO_2 levels in comparison with what is usual. It also suggests using the molecular sieve as a safe-guard in case the amine process is disrupted [14]. The report suggests that a maximum of 500ppmV would be reasonable because of the limitation on fuel gas consumption.

2.3.4. H_2O removal

Since this thesis will be evaluating the possibility of combining CO_2 and H_2O removal it is necessary to discuss how the water removal is done during the pre-processing of the LNG. The removal of water using a molecular sieve is done after the CO_2 removal, as to not disrupt the sieves. The current design of the Höegh LNG FPSO is amine

absorption, which means that the gas will be saturated with water after leaving the absorber.

The use of combined water and CO_2 removal is mostly interesting when there are CO_2 levels down to a ppm level. The H_2O is usually removed using a molecular sieve because of the low levels in the feed and the extremely low levels that can be allowed in the product. The molecular sieves for CO_2 removal was presented earlier and much the same design principles apply to the water removal. Although there may also be used Zeolites where the molecules are absorbed into the pores of the Zeolites.

2.4 Membrane Processes

A membrane is a selective barrier between two phases, which controls the flow of molecules between them. Membranes are still a relatively new technology, and are not commonly used for CO_2 separation. Membranes are especially difficult to work with when removing CO_2 down to low levels of CO_2. This is because the selectiveness of CO_2 against methane is not high enough and will often require more than one membrane in series.

A membrane for gas works by letting molecules diffuse through the membrane, which is selective towards one or the other compound. In the case of CO_2 separation the membrane is more selective towards CO_2, which means that CO_2 will diffuse faster through the membrane than the other compounds like methane. The diffusion is pressure driven and the thicker the membrane the higher the selectivity is.

The membrane process receives an inlet stream, which has a specific CO_2 content. While the output is a retentate stream, which is CO_2 lean, and a permeate, which is CO_2 rich. The permeate is the gas that has gone through the membrane and is therefore rich on for example CO_2.

Pressure is the driving force of the membrane and pressure is lost during the diffusion in the membrane. This then gives the permeate a much lower pressure, usually down to 1 atm. The retentate on the other hand only has a minor pressure loss and the losses are mainly due to friction against the walls in the membrane.

Three main geometric designs of the membrane are spiral wound, plate fin and hollow fibre. These differ by their area per volume and also there complexity and ability to

make thick membranes. Membranes that are meant for gas purification are usually made from polymers, which was invented in 1961 by Loeb and Sourirajan [16].

Membranes are used widely in gas separation as it works very well with high pressures and large volumes, which makes it perfect for natural gas. However the membrane is very sensitive to particles and liquids and the gas therefore has to be cleaned properly in advance.

2.4.1. Process description

A membrane consists of a pre-processing part in order to remove and liquids or particles that may damage the membrane. After this the gas enters the membrane and is split into permeate gas being rich on CO_2 and retentate being lean on CO_2. The pores inside the membrane separating the different gas stream are what allows the CO_2 to pass between.

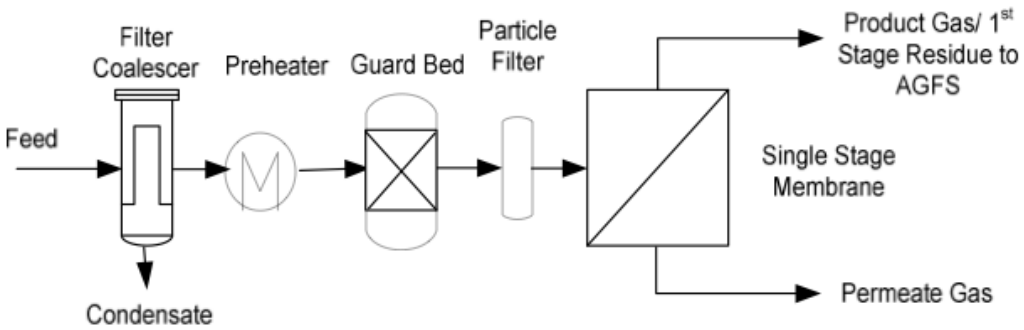

Figure 9: Single stage membrane Separex system [8]

2.4.2. What affects the design of the membrane

The weight, energy consumption and size of the membranes are all determined by how pure the product gas stream should be. Reducing the first 50% requires a certain size and reducing 50% of that, requires the same size as the first part. Thus removing 75% of the CO_2 requires double the size as for removing 50%. Thus increasing exponentially both hydrocarbon losses and relative area requirement. This is illustrated by the figure below, showing how the relative area-curve in green, which

increases exponentially. It also shows the hydrocarbon recovery in percentage decreasing exponentially.

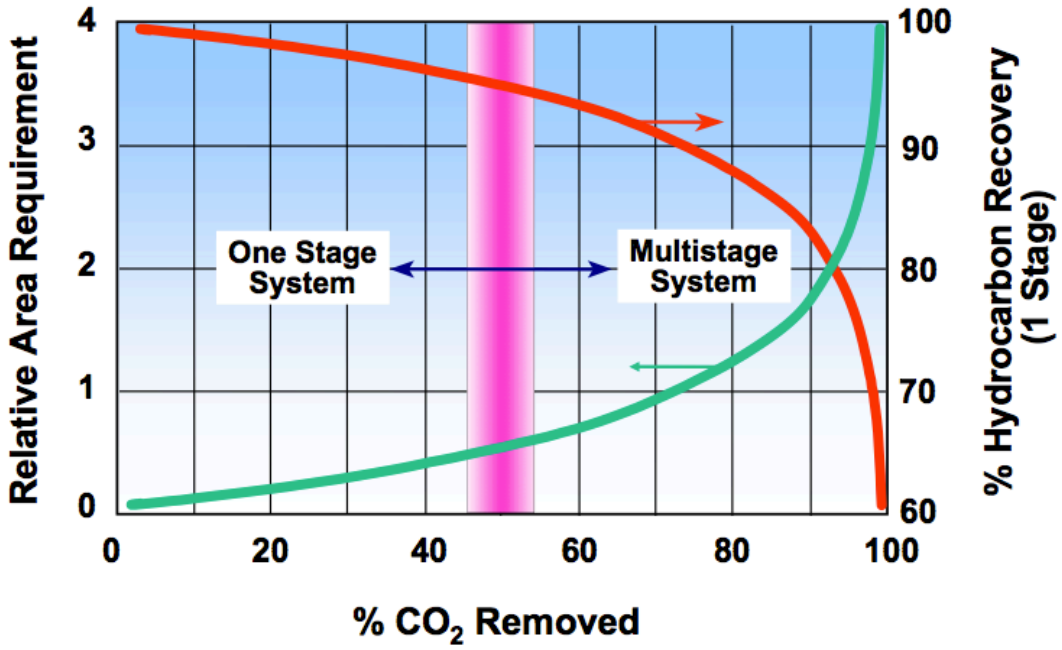

Figure 10: Effects of CO_2 removal [17]

2.4.3. Dual membrane

Membranes can be designed with two in series for ensuring better purity either in the final permeate or the final retentate. This can help recover some of the methane lost through the first membrane. We can see the effects of a two-stage membrane on figure 10, illustrated by the arrows showing how the hydrocarbon increases and the relative area required increases. A typical design of a two-stage membrane is shown below, with an extra stage on the retentate for increasing the purity of the CO_2 stream. It has also a pre-membrane in order to increase the CO_2 removal from the natural gas.

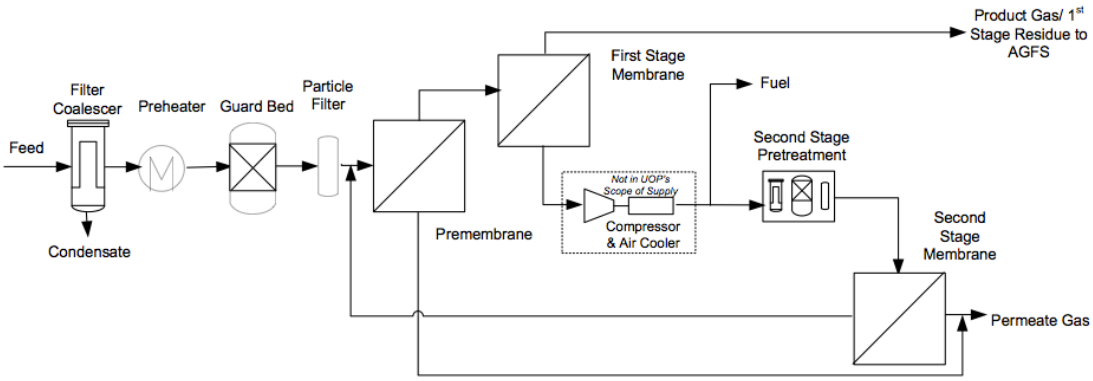

Figure 11: Two stage Separex system[8]

When adding a second stage membrane, a compression stage is required. The compressor is needed to ensure sufficient pressure for the second membrane stage. The two-stage membrane will require significantly more space, but will improve the CO_2 removal and reduce the hydrocarbon losses.

2.4.4. Principle of membranes

The membrane selectivity towards one compound rather than another can be shown as below:

$$\alpha_{i/j} = \frac{P_i}{P_j}$$

The selectivity for CO_2 over CH_4 can be found by dividing the permeability of CO_2 with the permeability of the CH_4. Better selectivity leads to a better process. A thicker membrane also gives a better selectiveness, but adds weight and will need a larger area because of the time used for the gas to pass through the membrane. The membrane is however not design according to how many molecules are removed, but rather the gas flow and the purity of the retentate and the permeate.

2.4.5. Separex membrane

The Separex system is a membrane technology owned by UOP and is designed for CO_2 or H_2 removal. It has been used for more than 25 years and is located in more than 60 natural gas plants for CO_2 removal. It is usually used in order to remove CO_2 down to sales gas specifications. One example is a facility where CO_2 is removed from 22% down to 2% [8]. As mentioned in section 2.2 about UOP, they are one of the leading suppliers of CO_2 removal technology and they have also acquired the Separex membrane technology.

2.5 Combined Systems

Combined solutions are used in order utilize the advantages of two technologies. When dealing with high CO_2 this becomes very useful, especially when the goal is to achieve a very low CO_2 content. Not all technologies have a good range of efficiency and will benefit from being combined with a technology, which can cover a different region of CO_2 content.

The membrane is a technology that is very suitable in combination with another. This is because membranes are good for bulk removal, while the LNG production process requires removal down to very small concentrations. The membrane will not be sufficient by itself, however it can be used to remove most of the CO_2 and then using another technology to reduce the CO_2 content further.

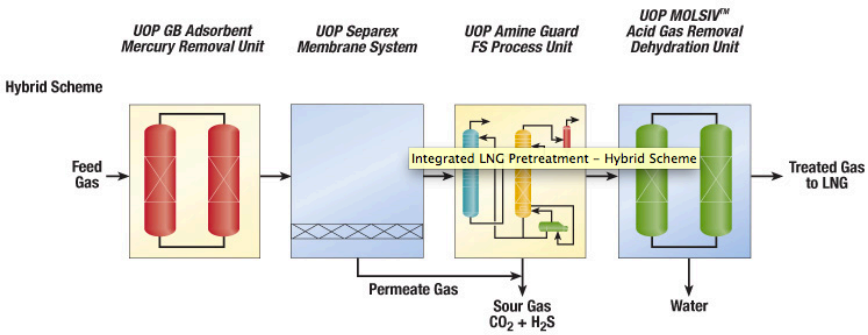

Figure 12: Example of combing technologies [18]

The figure above shows a hybrid scheme illustrated by UOP, showing the UOP Separex system together with the Amine Guard system and also the MOLSIV unit. In the illustration they are used to remove both CO_2 and H_2S. The molecular sieve is mounted last in order to remove the last fraction of CO_2. This is a good illustration of which region of CO_2 content they are most suited for. The membrane is suited to remove the bulk fraction and the amine process removes the middle and lower, while the molecular sieve is best for the very last CO_2 molecules.

The problem of having an additional process on the LNG FPSO is that it may complicate the process, and add weight or space demand. It is often easier to expand the current system rather than add an additional process. The molecular sieve however is already present in the LNG process chain and will therefor not add a second system, but rather expand the utilization.

2.5.1. Membrane- amine absorber

The combination of a membrane and an amine has the advantage of utilising simple and reliable technologies to remove the large amounts of CO_2. This is done by installing the membrane to remove the bulk of CO_2 and the amine absorption to remove the rest CO_2 The amine will manage the amount from the membrane down to

the required level for gas liquefaction of 50ppm. This combination gives the advantage of adding two simple solutions to manage a high amount of CO_2.

The membrane-amine solution is applicable for the case of adding capacity to an already operating design, where the capacity of the amine separation needs to be increased. It is also applicable to the extremely high CO_2 levels, where there are large amounts of CO_2 down to the level needed for LNG production.

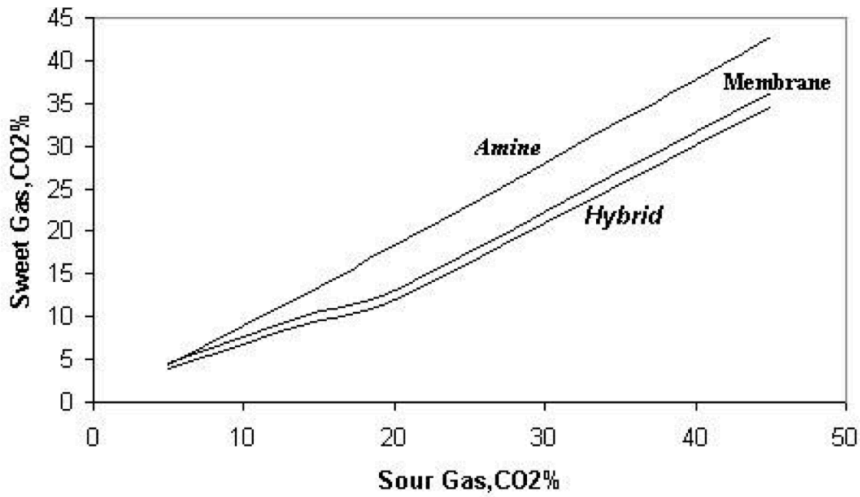

Figure 13: Comparison of combined and individual technologies [19]

Above shows how the hybrid system compares in efficiency for CO_2 removal and how the hybrid solution is the most effective for CO_2 content above 5%. The efficiency is shown as the CO_2 concentration in the feed as sour gas compared to the product gas (sweet gas). It also shows that the membrane system has a good potential for dealing with higher levels of CO_2 although the graph does not show the results for the low levels of LNG production.

2.5.2. Membrane – Molecular Sieve

This combination has a good potential for using the bulk removal advantage of the membrane together with the detailed removal with the molecular sieve. There may however be a problem that these have a gap where none of them are particularly suited. This may be a problem, as the membrane may not remove the CO_2 down to a level, which is manageable for the molecular sieve. In principle this solution is promising, because the two processes excel in each their end of the CO_2 removal. Most likely they will be better combined than individually.

2.5.3. Amine absorption – Molecular sieve

It has been decided that the CECA solution with combined absorption and molecular sieve will be the source of further study. This has been done to limit the area of research. CECA has been developing the technology for combined amine and molecular sieve. They were found to be the best provider for the water removal molecular sieve [20].

The combination with amine absorption and molecular sieve is not a usual combination as the amine absorption is relatively effective at low CO_2 levels as well, thereby eliminating the need for the addition of a molecular sieve. On the other hand a molecular sieve in addition can be used as a safeguard against CO_2 levels becoming too high when entering the liquefaction. Disruption in the amine process or peaks in the CO_2 level can cause this. This safeguarding may be especially important with regards to using amine absorption to remove CO_2 on an FPSO, as the technology is vulnerable to motion. These effects have been presented earlier in the section concerning amine absorption. The molecular sieve can in these cases be used as a safeguard and only operate as a CO_2 removal process when needed.

2.6 Cryogenic Separation

Cryogenic separation uses the principle of cooling the gas in order to remove the CO_2 physically. There are different technologies being designed and these are most applicable for LNG production plants. This is because there already are plans for cryogenic cooling in the liquefaction. The cryogenic separation also has good qualities for CO_2 removal in order to inject the CO_2 into a reservoir for storage. There are three types of technologies found in the literature, however due to their limited availability and advantages applicable to the LNG FPSO only the CFZ technology is discussed in more detail. The two other technologies include Cryex and Cryocell which both apply the technic of cryogenically cooling the gas in order to extract the CO_2 [21].

2.6.1. CFZ (Controlled freeze zone) technology

The CFZ technology is developed by the ExxonMobil Upstream Research Company and is based on the different volatility of compounds. It was invented in 1983 and the first pilot plant was built in 1985 and operated in the two following years. This first

plant processed gas containing between 15 and 65% CO_2 at pressures of 3800 to 4150kPa. The methane losses were impressively low at 0.5 % and the plant managed to produce natural gas at almost LNG quality although the initial goal was pipeline purity [22].

A full-scale demonstration plant started development in 2007 and is intended to process over 700 MMSCFD, which contains 65% CO_2 and 5% H_2S. This is supposed to be the largest acid gas injection operation in the world.

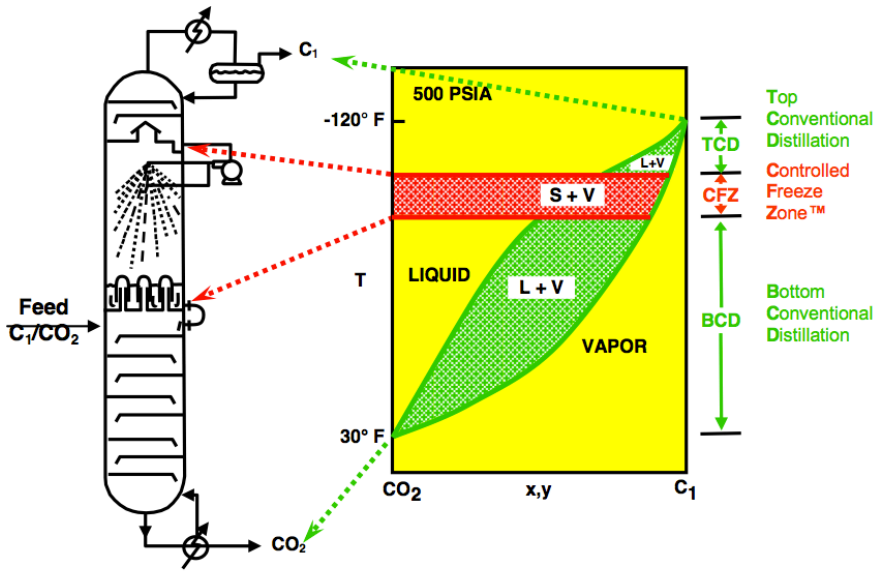

Figure 14: The CFZ Process [22]

The benefits of this process are less capital expenditure as the process involves fewer steps and thereby reduced equipment count and also less weight and footprint. There is no need for solvents or additives. The injection costs are reduced as the CO_2 exits as a high-pressure liquid. The CFZ has low losses to the gas stream and has increased efficiency with higher CO_2 content.

This process has been shown to be very promising, but its main benefit is for CO_2 reinjection. The technology imposes no limitation on the amount of CO_2 or H_2S and could therefore be a good alternative, for those extremely high cases of CO_2 content that will be discussed.

2.7 Summary - Most promising technologies

During this chapter several technologies for removing CO_2 have been presented all of which are in operation today. They range from very new, such as the CFZ, to the widely used amine absorption, which has been around for decades.

Some of these technologies will be studied in more detail as alternative CO_2 removal designs, while some are not as well suited for CO_2 separation aboard an FPSO. All the technologies have certain advantages, but not all advantages are applicable. This is the case for the CFZ process, where the advantage of CO_2 injection is not applicable. This is because the design of the LNG FPSO does not incorporate CO_2 injection and thereby rendering the advantage useless. Membranes are not suited for removing CO_2 down to a level needed for LNG production, but can be suitable for use in combined CO_2 removal as it has great capabilities for bulk removal. The membrane has no moving parts and do not have the need for regeneration gas. Although there is a problem with high CH_4 content in the permeate and thereby comes the question of what can be done with the waste/ permeate.

Further work will be to study a selection of technologies and also discuss the possible combined separation technologies. The amine absorption is the main technology, because of the broad working area and an easy adaptable design. Molecular sieves will also be discussed as the most promising solution for extremely low CO_2 contents.

Chapter 3 - Suitability of Separation Technologies

In the previous chapter some advantages and disadvantages were mentioned, however this chapter will take a closer look at how suitable the separation technologies are. During this chapter the important aspects to the CO_2 separation technologies will be discussed. How do they perform according to these criteria's and thereby finding out their suitability?

When considering which is the most suitable CO_2 separation method for the LNG FPSO there are several important factors to consider which are listed below.

- Weight
- Footprint
- Heat consumption
- Power consumption
- Hydrocarbon losses
- Complexity
- Reliability
- Flexibility
- Renown
- HSE

The most important aspects are the energy consumption and complexity/weight and most of the factors above can be linked to these two aspects. All the aspects listed above will be discussed according to the most promising technologies from the previous chapter. These technologies will be the amine absorption, membrane and molecular sieve. These will be assessed individually and later compared and possibly combined in order to use their individual advantages.

Other aspects also discussed in this chapter are possible obstacles that may arise and should be considered in order for the solution to run smoothly. Furthermore the suitability for LNG FPSO instalment will be discussed, with possible obstacles and possibilities.

3.1 Amine Guard FS Technology

The amine Guard FS Technology is a versatile technology and can easily be designed for a wide range of CO_2 composition without significantly changes in the main design. It can remove both CO_2 and H_2S, and it can be designed with the four design schemes shown in section 2.2.

3.1.1. Advantages

Power consumption – The power consumption is due to the circulation pump, which has a relatively low power demand. This will make the amine process reasonably power efficient.

Hydrocarbon losses – The hydrocarbon losses are usually as small as 0.1%, and are considered a relatively insignificant amount. The amine process has the highest hydrocarbon recovery of the technologies commonly used.

Complexity – The amine process is a relatively simple process, with few main components. Although it has a complex chemical process, with the absorption column requiring special expertize, it has been thoroughly designed. It has therefor become a widespread technology with enough experience to lean on. The system has a high equipment count because of the systems associated with regeneration and also the refill system for the amine solution. The system also requires a large secondary system for removing the gas in several stages. This adds to the complexity, but it can still be considered a relatively simple process.

Flexibility - The higher CO_2 content will need an increased amount of heat. The extra heat will be needed to regenerate the amine in the stripper column. As the CO_2 increases, so does the flow rate of amine solution. The efficiency increases with increased CO_2 content. This can be seen on the graph below, as the capacity of the amine solution increases with increased CO_2 concentration in the input gas. The graph also shows how the correlation is exponential, thereby making the amine process exponentially better with increased CO_2 content. The amine absorption technology is versatile and can be adapted to a large range of CO_2 content. It is used for CO_2 contents above 20% and at least as low as 3% [6]. This makes for easy adjustments depending on the CO_2 content. It is also easy to redesign for different CO_2 contents,

as the main altercations is the flow rate of the amine solution. Although the size of the absorption and desorption columns will need to increase.

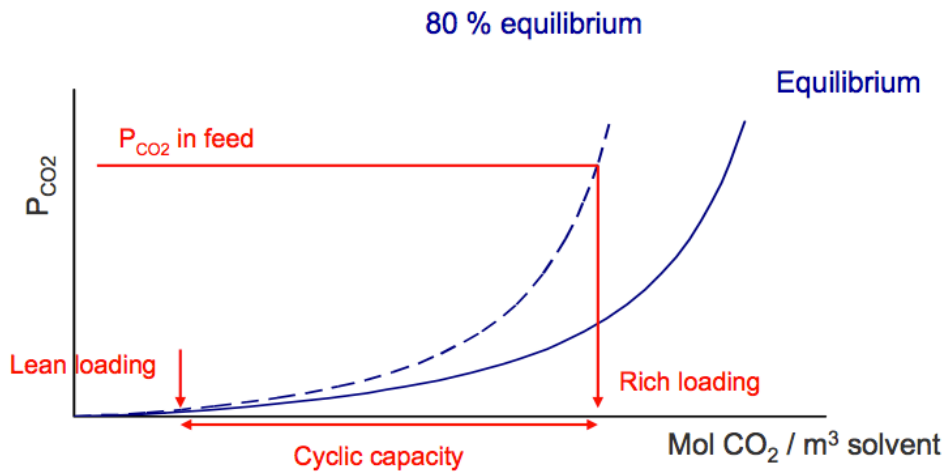

Figure 15: CO_2 solubility on account of partial pressure [23]

Renown – The technologies are broadly used and well known. It also has a broad area of usage and can be designed to deal with almost all CO_2 compositions given the right conditions. Usage areas also expand past merely CO_2 removal in natural gas stream, and there lies much knowledge in the other areas of usage.

Reliability – The system has a reliability issue with regards to correct flow pattern, although it otherwise has been known to be quite stable.

3.1.2. Disadvantages

Weight – The system has a large weight because of the large columns and the large amount of solution circulating the system. Also the weight has a high centre of gravity, making it unstable when placed on the shifting surface of a ship.

Footprint – Because of the large system surrounding the separation column, this design requires large amounts of space. This includes flash column and refill systems.

Heat consumption – The amine process has large heat consumption because of the high temperatures required in the regeneration column. Although much of the heat can be taken from a heat exchanger placed before and after the stripper column, there will still be a large need for heat because of the losses.

HSE – The storage and use of chemicals may be an environmental threat as well as a health issue is not contained sufficiently. Although the solution is quite safe, but does raise some issues compared to other CO_2 removal technologies.

3.1.3. Suitability for an LNG FPSO

When placed on a ship the amine solution has some significant disadvantages, which is mainly due to the weight. The weight is reasonably large and not very well centred causing increased instability to the ship design. However there can be taken certain precautions under the design.

On the other hand, the amine process is well suited because of its ability to be designed according to a large variety of CO_2 contents and also being effective at removing CO_2 down to the required LNG level and has therefor been the preferred choice in the LNG production chain.

The amine process fits perfectly in the middle of the range of CO_2 removed. This makes it perfect for combining it with other technologies and can either take the highest or the lowest level of CO_2 depending on the other technology. The amine process functions well individually, but can be improved by adding either a membrane or a molecular sieve.

3.1.4. Obstacles and Limitations

Operating under rough sea conditions may cause upset in the amine process. However the amine absorption can be designed with extra capacity or with redistribution along the column, making sure that the effects of a non-vertical column are limited. The effect highly depends on the height, making this problem worse as the height of the amine column increases. The height of the columns makes the system more affected by ship movement. This can be taken into account, either by overdesign or by inserting spreaders throughout the column for redistribution of the gas and solution. Another solution is to use two columns instead of one. This may however dramatically increases the weight and the plot area and will add large investment costs and also increase the operating complexity.

Ship instalment may become a problem, as ship movement will affect the amine process. This will cause the amine process to be less effective since the solution and gas will not be evenly distributed.

As the CO_2 removal reaches a certain size, it may be necessary to divide the absorption column into two. This will lead to a much larger footprint and a higher equipment count. Amine systems have been known to produce foam when in operation. However this has been dealt with using an anti foaming compound.

An increased amount of CO_2 in the feed gas may result in increased size of the absorption column. Another solution may be to increase the mass flow of the amine solution. This will put a bigger strain on the heat exchangers and also the pumps to handle the mass flow. When increasing the mass flow without changing the rest of the system, the velocity of the solution through the pipes will increase. The losses will increase because it is related upon friction, which again depends on the velocity.

3.2 Molecular Sieve

The molecular sieve is effective for small CO_2 levels, as the process requires very little extra equipment other than the essential molecular sieve. The container and its content, together with the regeneration gas system, make this system very simple and effective for very small amounts of CO_2.

3.2.1. Advantages

Power consumption – The power consumption is zero, as it does not require a pump or a compressor, although there may be a small pressure loss.

Complexity – The molecular sieve is a quite simple process, if not counting the molecular technology behind the Zeolites. It also has few components a simple flow scheme.

Reliability – The reliability of the molecular sieve is good as it requires very little rotary parts, which can wear or break down. The Zeolites also are quite stable as long as the gas stream is pure.

Flexibility – The molecular sieve has a certain flexibility as to decreasing the time between each regeneration. Although it can handle larger CO_2 composition, it will greatly affect the efficiency of the process.

Renown – The molecular sieve is widely used and well known within the water removal process. As it applies the same process for CO_2 removal as for water removal, people will have a good knowledge of how the process works.

HSE – The process is quite environmental friendly as it does not apply any chemicals or other substances dangerous for the environment or can be a safety issue.

3.2.2. Disadvantages

Weight – The molecular sieve is not a lightweight solution as the zeolites are relatively dens and the size of the sieves is relatively large per CO_2 mole removed. The fact that it needs a regeneration sieve also adds to the weight and the solutions discussed through the CECA report uses 3 sieves in order to operate one and regenerate two.

Footprint – The footprint is relatively large seen on a per CO_2 mole bases. The design incorporates two sieves in order to allow for constant operation, one in operation and one in regeneration, thus making it larger. Also in order to allow for significant time between regeneration, the size of these sieves will need to be large enough. The size of the molecular sieve increases significantly when dealing with both water and CO_2. In order to remove CO_2 from a 0.5% gas stream, it requires nine times the size than with pure water removal.

Hydrocarbon losses – Almost non-existing if not counting the regeneration gas. As the molecular sieve is especially designed for removal of CO_2 it will not absorb any hydrocarbons, as they do not interact with the Zeolites that are found inside. The regeneration gas cannot be recycled because of the CO_2 content, which has to be removed using the regeneration stream. The product stream decreases because some of the gas is wasted in the regeneration. Regeneration gas consumption – usually the regeneration gas is recycled, but with a combined CO_2 and water removal the regeneration gas must be dealt with either by flaring or as fuel gas. The design also uses the treated gas for regeneration and for a composition with 0.5% CO_2 there will be a loss of approximately 18% of the gas.

Heat consumption – The molecular sieve applies relatively low heat consumption, though the regeneration gas is heated to 300 degrees Celsius. This heat can be disregarded as an energy consumption because of the mentioned waste heat recovery.

It however requires a system to supply the heat and this adds to the equipment count and thereby making the heat consumption an important factor. The heat consumption will however be discussed later and it will be shown how this requires less attention.

3.2.3. Suitability for an LNG FPSO

The molecular sieve is suitable for an LNG FPSO as it is already a standard part of the process through the water removal process. This limits the extra equipment count of adding a second process. On the other hand it limits the flexibility of the design, as it will only be suitable for small amounts of CO_2.

The molecular sieve has a high efficiency for separation of very low CO_2 content, typically somewhere below 1%. This is much due to the effective bonding of molecules in the molecular sieve and not least if taking into account that the molecular sieve already is a current process in the LNG chain. The size and weight of this process is affected by the amount to be removed and thereby adding extra weight when dealing with higher levels of CO_2.

The molecular sieve process is usually always located in an LNG process chain and can be used for more than water removal. It can therefor be possible to use as relief for other processes such as the amine process. Earlier it was mentioned that the molecular sieve could be used as a safeguard, thereby making the effects of CO_2 handling in the molecular sieve only temporary.

3.2.4. Obstacles and Limitations

The main obstacle is dealing with the regeneration gas, which becomes very high for CO_2 levels above 400ppm. Although the treated gas is usually used for regeneration and thereby uses the more valuable gas. However the gas can be utilized as fuel for the gas turbines. As this consists of many interesting topics, it will be discussed in another chapter. When using the regeneration gas as fuel there will be a need for gas turbines designed according to the regeneration gas specifications. If this is not possible, large amounts of energy will go to waste when dealing with the regeneration gas by an alternative method like flaring.

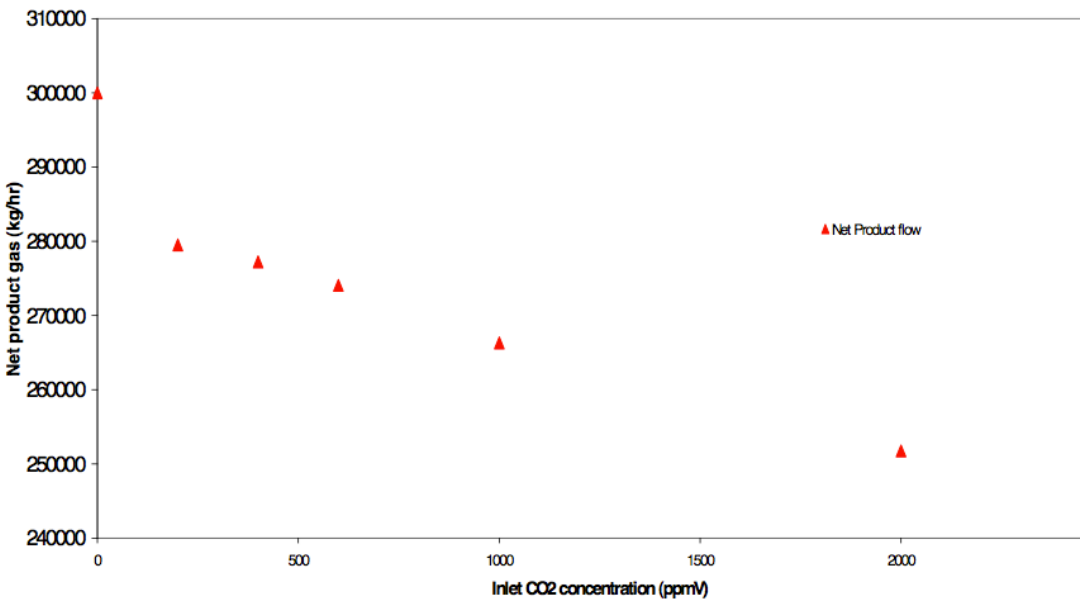

Figure 16: Hydrocarbon recovery in molecular sieve [14]

Figure 15 shows how the hydrocarbon recovery decreases with increased CO_2 inlet concentration, as this becomes more than 20,000 kg/h the problem of how much the gas turbines can handle arises. Most likely they can replace the balance gas to the turbines, which has a flow rate of 22,000 kg/h, although this is dependent on the heating value of the regeneration gas and stability of the flow.

Limitations

The regeneration is the a problematic limit, because if the amount of regeneration gas produced exceeds the amount that can be used as fuel for the gas turbines, the regeneration gas will have to be flared. This will waste large amounts of energy in addition to the environmental emissions.

A limit also exists with regards to possible CO_2 concentration in the gas turbine fuel. The gas turbines are not able to handle high CO_2 content as this reduces the amount of oxygen and fuel through the turbine and thereby reducing the power and eventually suffocating the turbines.

The size and number of molecular sieves needed also may limit how much CO_2 it can handle. The molecular sieves increase vastly in size, when dealing with higher amounts of CO_2 and there may also be a need to increase the number of molecular sieves instead of the size. Thus giving a more complex system with more equipment and difficult regeneration control.

3.3 Membrane – Separex Technology

Membranes have a limited suitability with regards to CO_2 removal for LNG production, as it has a low efficiency when there is a high percentage removal of CO_2. It is therefor most likely not relevant as an individual technology, but the advantages of this technology will be discussed as an introduction for the combined membrane and amine solution.

3.3.1. Advantages

Footprint – The membrane has low footprint due to the few components involved. It consists of mainly the membrane itself and little else. Although it relies on area in order to work it can be made very compact, but it is a trade between good performance and low space.

Weight – The membrane is relatively compact which also means a high weight per volume, but the weight per CO_2 is relatively low. This makes it a good solution for systems where weight is essential. The membrane needs proper pressure containment, which may add to the weight, but it can usually be created in lightweight material and as it has a limited size the weight will be kept low.

Heat consumption – The membrane does not have heat consumption and thereby is the best solution considering the heat consumption. This also means that the heat delivery system for CO_2 removal can be dropped.

Power consumption – is non-existing when it comes to one stage membranes as the driving force is the pressure through the membrane. The main stream has very little pressure loss, while the CO_2 rich gas has a large pressure loss due to the permeation. Thereby making this a very efficient system since no compressor is needed.

Complexity – The membrane implements a very simple principle and operation of the membrane, as it does not have liquids or other material that change. It can run steadily without interruption for a very long time. The technology behind the membranes is quite complex, as the design of the membrane is down to a molecular level. It is very important to have a singular pore structure. The Separex unit also has a very short start-up time because it does not depend on settling, as long as the input is at the right pressure and temperature, the membrane uses very little time to stabilize.

Renown – The technology has been widely used and has been developed into becoming very reliable. The technology is also much used for particles and although removing molecules are trickier it uses the same principle. The technology is also much used in the oil and gas industry and has been used through decades.

HSE –uses No flammable or dangerous liquids are used in the membrane and is very safe, except for dealing with natural gas. The membrane has a continuous flow and does not store any fluids or gases.

3.3.2. Disadvantages

Hydrocarbon losses – are relatively high because of the low selectivity of the membrane, making the CO_2 rich retentate stream contain a fair amount of CO_2. It is not uncommon to have a loss of 4% compared to an amine treatment plant where it usually is less than 0.1%.

Reliability – The membrane is quite reliable as it does not have moving parts and pre-treatment – the membrane needs a gas that is free of solids and liquids as these can reduce the efficiency of the membrane. It is therefor essential to have a good pre-treatment system.

Flexibility – The membrane has little flexibility other than decreasing the flow rate, thereby allowing more gas to permeate. This may however cause a fluctuations in the permeate flow and cause a higher flow or increased methane content.

3.3.3. Suitability for an LNG FPSO

As mentioned en chapter 2, the membrane is not an efficient method for removing small amounts of CO_2 as the ratio determines the size. The membrane technology is however very effective for removal of high CO_2 content. It is therefor a very useful technology to implement when dealing with high CO_2 levels together with another solutions, such as the amine technology. This process is not well suited for an LNG FPSO because of the lacking ability to effectively remove CO_2 down to the required level. On the other hand it is well suited for the limited space and weight that exists when designing an FPSO. It also experiences limited effects of ship movement, as the gravitational weight of the gas is much less significant than on liquids.

The membrane technology is ideal for combination as it handles the higher level of CO_2 content and other systems take care of the lower CO_2 levels. This works especially well when one considers the membranes ability for bulk removal.

3.3.4. Obstacles and Limitations

The membrane is sensitive to liquids and particles that may be present in the gas stream. Sufficient removal of them is therefor essential. This adds to the complexity and also shows how vulnerable the membrane is if the pre-processing should fail.

There is also the question of hydrocarbons in the permeate and how to deal with them. The permeate cannot be vented to the atmosphere, but must be either flared or used as fuel gas. This means adding to the complexity of the fuel gas, which receives an extra source.

The limitations of the membrane lie in the design of the membranes, as it is very technologically demanding to reach low CO_2 levels in the retentate stream. In order to do so, it will need larger area, making the membrane very large. This may then lead to the membrane becoming less economically viable.

Pressure also limits the membrane, as it cannot be too high. Although pressure is the driving force and a necessity for the membrane to function, there are certain difficulties with regards to containing the pressure. The challenge has usually evolved around the membrane, which should be as thin as possible for faster permeation. This is however solved by using another compound in addition for strength and then using the standard membrane material to achieve the selectivity. Although the selectivity of the membrane often limits the purification possible because unwanted compounds also are removed.

3.3.5. Two-stage Membrane

The two-stage membrane that has earlier been described is better suited for removing higher percentage of CO_2 or decreasing the hydrocarbon losses, thereby making the system more efficient. However there will be a large power demand because of the pressure loss through the permeate of the first membrane and thereby lacking the driving force for the second. The system will also require double the space of a single stage system. It also increases the complexity and adds components such as a compressor, which changes the reliability.

Using the two stage system will mostly be an option if the separation from a single stage system does not suffice for the purpose. This may be if the CO_2 level in the product is too high or if hydrocarbon losses are too large.

3.4 Hydrocarbon Losses and Heat Recovery

This section will look at how the hydrocarbon losses can be utilized and also what lies behind the energy consumption. Although the numbers for some of the processes may look large, in reality they may be less or it may be possible to increase the utilization. Especially the hydrocarbon "losses" in the membrane and molecular sieve process shall be addressed, because they have a possible usage in certain cases, and especially for the design of this LNG FPSO. Another possible solution for the gases containing the hydrocarbon losses may be to vent them, although this requires very low levels of hydrocarbons in the gas. Venting is usually not an option because of safety and the environment.

3.4.1. Flash gas – amine

The hydrocarbon content in the CO_2 gas being removed from the gas stream is usually less than 0.2%, making the CO_2 stream pure and it can therefore be vented at a safe location. This makes the amine process very effective and also any flaring or gas treatment unnecessary. There is also a stream of amine flash gas, which is circulated back, entering the system at an earlier stage, but as this only contains very little amounts of CO_2 and only has a mass flow of 170 kg/h, this does not affect the processes.

3.4.2. Regeneration gas – molecular sieve

The regeneration gas is the gas used for regeneration of the molecular sieves. The gas used for regeneration has a high value, as both CO_2 and water is already removed. After regenerating the molecular sieve the gas contains a lot more water and CO_2. The regeneration gas then has to be disposed of, which because of high hydrocarbon content must be burned. Two alternatives for dealing with the regeneration gas are flaring, which will cause an enormous loss of valuable gas. The other alternative is to utilize this gas to produce energy and the most suitable solution is to feed the gas to the gas turbines. The last alternative, which rarely is an option, is venting the gas, which due to strict restrictions and safety is not a choice for the regeneration gas.

Regeneration gas as fuel

In order to utilize the regeneration gas as fuel it will replace one of the other fuel sources. The simplest solution is to replace the balance gas, because the only purpose of the balance gas is to supply the gas turbines with enough fuel. The other alternative is to replace the end-flash gas stream, but this gas stream is needed in order to purify the gas and remove nitrogen.

Using the regeneration gas as fuel may cause some complications for the gas turbines, as it may be difficult for the gas turbines to handle. This is because the gas contains more water and CO_2 than under normal operating conditions. Although gas turbines have been known to be able to run on very high CO_2 content it will reduce their performance and the transition may be a problem. Most likely regeneration gas will be around half of the total fuel gas. This leading to a lower CO_2 level, although the nitrogen content in the end flash gas also decreases the heating value.

If the utilization of the re-gas is limited to only replacing the balance gas there will be a limit of around 22,000 kg/hr. This means that if the regeneration gas stream becomes larger than this it will either have to replace the end flash gas or be flared. For small amounts or small periods of time this should not be a problem. The 22,000 kg/h should be set as a limit for practical reasons of making the integration of a molecular sieve easier.

The utilization of the regeneration gas will give a higher flow rate throw the LNG production system until the molecular sieve as the balance gas, which was earlier taken from the beginning now goes through several processes before being utilized as fuel.

3.4.3. Permeate gas - membrane

The permeate gas exits the membrane and contains approximately 40% methane. This means that the “waste gas” coming from the process still contains much energy and should be utilized as fuel. This may however be difficult because of the high CO_2 content, making it more likely that it must be flared. It may also be a problem that the proposed design from UOP uses a permeate stream with a mass flow of 44,426 kg/h, which is more than the total fuel demand of 41,650 kg/h. In addition not all of this fuel gas can be substituted with the permeate gas because of the end flash gas.

The proposed design from UOP suggests flaring and mixing it with the gas from the amine process. Together these two streams will have a mass flow of 84,000 kg/hr. This is a large amount to be flaring although 75% is CO_2, thereby lowering the heating value.

The same as for the regeneration gas goes for the mass flow with the membrane permeate as this gas has gone through several more steps than the balance coming almost directly from the inlet.

3.4.4. Heat consumption

The amine process is the main consumer of heat, and although it may require large amounts of heat, the waste heat recovered from the turbines should be sufficient. The molecular sieve also requires heat for the purpose of regeneration, which is done at 300 degrees Celsius. Since the waste heat from the gas turbines can be utilized the heat can be considered "free" energy and therefor does not need to be included the main energy balance. This is under the prerequisite that the heat demand is less than the waste heat available.

However having heat consumption requires a heat delivery system, this however may be a requirement nevertheless. On the other hand the heat consumption for CO_2 removal may cause an increase to the size of the system.

3.4.5. Power consumption

The power needed for running these processes comes from an electrically driven motor, which runs the pump or compressor. The electricity for the motor is produced by several gas turbines placed on the ship. Although there is some flexibility in the design of the compressor or pump, there may be a limit to the available electricity produced by these gas turbines in the initial design. This means that by for example adding another compressor, when using a dual membrane system, can lead to a redesign of the power supply. Meaning another turbine might be needed, alternatively larger turbines. Apart from the fuel costs for the turbine there are costs for increasing gas turbine size, which can develop large extra costs for a little extra power.

3.5 Summary

This chapter has focused on the three most promising technologies. The most promising so far has been the amine solution, despite the high weight. The membrane is a promising technology in combination with another CO_2 removal process and the molecular sieve is best for very low CO_2. It has also been an analysis of the difficulties surrounding the hydrocarbon losses and how the effects can be minimized. The main solution is to use the gas as fuel for the turbines, although this raises questions as to the turbines ability to handle this.

Chapter 4 - Combined CO_2 Removal

This chapter will mainly focus on the most suitable combination of technologies for use on an LNG FPSO. This will include combining the amine absorption and molecular sieve as a way of utilizing the molecular sieve for more than water removal. Also a combination of amine absorption and membrane technology will be discussed, as this technology is ideal for efficiently removing larger amounts of CO_2. Thereby possibly increasing the efficiency in both ends of the CO_2 absorption, which is removing the higher CO_2 and the lower.

4.1 Amine – Molecular Sieve

This combination is best suited for medium CO_2 levels down to 50 ppm. An example is that the molecular sieve for removes the CO_2 content from 0.5% and down to 50ppm and the amine absorption removing it from 10% down to 0.5%.

4.1.1. Advantages

Combining these two will minimize the CO_2 absorption in the amine treatment and can operate with a leaner amine solution. CO_2 and water removal can be combined in the molecular sieve. This fully utilizes the molecular sieve, while decreasing the capacity required of the amine treatment process.

As mentioned earlier the technology has a good potential usage for acting as a safeguard. This is especially relevant considering the chance of something interrupting the flow path in the amine solution, causing a flow of higher CO_2 than the required 50ppm.

4.1.2. Disadvantages

Although there are many positive aspects there are some potentially negative as well. One is the increased strain on the molecular sieve, which will have to handle both water and CO_2. This may cause increased wear on the molecular sieve. It will also be more difficult to operate and finding the optimal regeneration time. At the same time you are dealing with problems concerning the regeneration gas, which may have some problems relating to utilization. Having an amine process in front of the molecular

sieve may also decrease the effectiveness of the molecular sieve because of the increased water content in the gas.

4.1.3. Suitability

This technology has a good potential for utilizing the spare capacity of a molecular sieve that is already placed on the LNG FPSO. The molecular sieve can take care of the lower parts of the CO_2 removal and thereby reducing the required capacity of the amine absorption. It will also most likely be more effective than amine absorption, although some difficulties exist. These difficulties are caused by the regeneration and will be discussed further in chapter 5.

The typical distribution will be to utilize the molecular sieve as long as the regeneration gas can be used as fuel gas. This limit appears to be around 500ppm, for higher CO_2 content the amine will be used to remove CO_2 down to the 500ppm level.

This system may be very suitable for an LNG FPSO because of its design, which may already contain both an amine and molecular sieve process. Because of the limited weight availability this this has a good potential.

4.1.4. Complexity

Their disadvantages add to the complexity of the molecular sieve, and will cause the CO_2 removal to require more attention. The molecular sieve will deal with two components and close monitoring will be needed to check how fast the sieve fills up. The design of the sieves may also be difficult, because the sieves should be saturated at around the same time and simultaneous saturation ensures an efficient system.

4.1.5. Obstacles and Limitations

Possible complications may be that there will be a problem running the gas turbines with the different compositions coming from the regeneration gas. The regeneration gas will typically have a peak in CO_2 and water content under the start-up of the regeneration.

The combination is largely limited by how much the molecular sieve can handle, both when it comes to maximum size, regeneration time and also the regeneration gas amount.

4.2 Membrane – Amine

The membrane and amine absorption solution is best suited for higher CO_2 content as it will reduce the size of the amine absorption and also reduce the total weight and area needed. A two-stage membrane system may also be applicable.

4.2.1. Advantages

This combination will improve the efficiency for gas stream with higher CO_2 content because of the good bulk removal qualities of the membrane process. This will lead to the possible design of an LNG FPSO for higher CO_2 content without much modification to the main design. The combination of membrane and amine will decrease the size of the amine process, and the membrane does not require the same amount of power as can be saved in the amine absorption.

The combination of membrane and amine absorber increases the flexibility and makes the process less affected by changes in the CO_2 content. The results will almost be half compared to changes handled by the pure amine absorption solution [8].

The combination also saves weight due to the low weight per mole CO_2 removed of the membrane. This making the combination preferable as the pure amine solution increases.

4.2.2. Disadvantages

Similar to everything else in the design, adding another process instead of only having one, ads complexity, size and equipment count. The complexity increases both in the design and during operation because it becomes more difficult to get the optimal design and being able to run the system efficiently. Having two processes also requires more expertise, which can be more difficult to get a hold of. Adding another process increases also the probability of failure, as both these processes have a probability of failure and added together the probability becomes higher.

4.2.3. Suitability

The combination of a membrane and an amine process has a large potential for dealing with high CO_2 levels, typically above 10-15%. This is much due to the membrane only mildly being affected by the increase in CO_2 level as long as the percentage CO_2 removed is constant. This combined solution will be perfect for

taking over when the amine process becomes too large for the LNG FPSO. This will especially be the case when the need for two absorption towers in the amine design.

Typical distribution of CO_2 removal between the technologies may be where the membrane handles the first 50% of the CO_2 and the amine process removes the rest. Meaning that if the CO_2 content is 20 MMSCFD the membrane will remove it down to 10 MMSCFD and the amine will remove the CO_2 down to a level of 50ppm.

The combination is very suitable for reducing the size and weight of the amine absorption. The amine absorption also requires more space per extra CO_2 content than similar technologies. The membrane is also easy to operate and maintain and has a high reliability and therefore is perfect as an add-on.

4.2.4. Complexity

The membrane and amine processes are rather simple processes and are widely used in the industry. When combining two technologies it almost always adds to the complexity. This is because there are two processes that need controlling and it also adds to the total equipment count. Adding to the complexity is also the two CO_2 streams with the permeate having a high flow rate and CO_2 content.

4.2.5. Obstacles and Limitations

The permeate will have a higher hydrocarbon content than the single amine absorption. The hydrocarbons lost in the process can either be used in flaring or as fuel gas. Using it as fuel gas however depends on the limit on CO_2 concentration and also the limit on how much fuel gas is needed

The balance between the membrane removal and amine absorption will need to be solved. A 50/50 solution may be appropriate, but more study is needed.

Certain limits deal with the membrane and have been mentioned in chapter 3 specifically dealing with membranes. These limits apply to handling the permeate, which has a high content of hydrocarbons. It may be as much as 40% CO_2 and it is therefor neither safe nor economical to vent this to the atmosphere. It should therefor either be flared or preferably used as fuel gas.

4.3 Summary

There is a large potential for combining technologies in order to utilize the best from two technologies and combine their working region. Although they together may create a more efficient system, both solutions will add complexity and equipment count. With the amine- molecular sieve system there will not be added much new components in the case of the LNG FPSO, although it will give a more complex system. The amine-membrane system will on the other hand add a second process, resulting in more equipment and expertize required. Both of these systems deal with a gas stream containing considerable amounts of CO_2 and hydrocarbons and can be a potential loss or a problem when used as fuel gas.

Chapter 5 - Trends and Examples

This chapter will discuss the development of trends for different aspects of the solutions such as weight and energy demand. There will also be some examples focusing on selected CO_2 compositions in order to view each case more carefully. The graphs developed are for illustrational purposes, as the values are estimates derived from a few of design cases. The data is based on a flow rate of 300,000 kg/h and the hydrocarbon content is on the basis of Höegh LNG's design specifications. Tables will be developed as background data for the graphs.

This chapter will also discuss the competing technologies for 3 categories of CO_2 content. This will be done with the background of reports done and also data converted of scaled for the purpose of comparison. There will be compared data for energy consumption and weight, and also look at similarities and differences compared to other competing technologies. The solutions shown here are further analysis of those shown in chapter 3 and 4 and include; molecular sieve, amine-molecular sieve, amine and amine-membrane.

Earlier the thesis has briefly discussed the different CO_2 removal processes. Several selection criteria's apply when choosing a removal process, although the decision is often taken on a best practice approach. The thesis will further aim to give examples on how the relationship between different CO_2 levels changes. Other processes may be more beneficial with an increased heat demand in the amine process.

5.1 Developing Tables

The tables developed were based on design reports for CO_2 removal in a LNG plant and being able to scale and find comparable data. The mass flow is set to be 300,000 kg/h, which corresponds to one of the reports and also is close to the LNG FPSO design. The composition of hydrocarbons was taken from the design of the LNG FPSO and has a LHV after CO_2 and water removal of 47 MJ/kg. The tables are meant as a representation of how the different technologies and further study will be needed to ensure accurate results.

5.1.1. Molecular sieve

In order to make a complete table with total energy demand including power demand and hydrocarbon losses. The values used were from the CECA report for CO_2 up to 0.2% and a UOP report for 0.5% CO_2. Thereby giving 6 values from 200ppm to 5000ppm.

The hydrocarbon losses were seen as only real losses when exceeding the balance gas and amine gas, which it was possible to replace with the regeneration gas. The regeneration gas has been more closely covered in the chapter section 3.4. This meant that there would not be any energy demand/losses until a level of 500ppm of CO_2. Until then all the regeneration gas can be used as fuel gas.

5.1.2. Amine process

There was a need for data over a widespread range, all the way from 0.02% in order to compare it with the molecular sieve and all the way up to 20% for comparison against the amine-membrane process.

Since there were limited amount of data available for these regions, it was decided to scale the values in order to get the closest data available and give a adequate representation.

As the hydrocarbon losses associated with the amine process are only 0.01mol% it was decided not to take it into account. It would also be no problem utilizing most of these hydrocarbons in the fuel gas. Also as the heat has not got the same significant effect as power demand and hydrocarbon losses, this was decided to leave on a more discussion bases.

Energy demand

The energy demand for the amine process is seen as having a linear correlation with the amount of CO_2 that needs to be removed. This is a slight simplification, as the amount of amine solution per mole CO_2 being removed, most likely will be reduced with increasing CO_2. This is however seen as a small deviation and is for simplicity disregarded. By knowing the power demand for one case, it can be divided by the percentage of CO_2 and used for different CO_2 levels.

Weight

In order to find the weight for different CO_2 levels, the procedure was much the same as with the energy demand although setting a minimum weight. The system adds around 600MT immediately when starting the amine CO_2 removal system with a gas flow of 300,000 kg/hr. For each percentage CO_2 that needs to be removed it is added 260 MT on the system.

5.1.3. Amine-molecular sieve

In order to develop a table for the amine-molecular sieve process, the molecular sieve was set to remove the CO_2 from 0.05% down to 0.005%, putting less strain to the molecular sieve. Adding a molecular sieve will reduce the power consumption of the amine and also cause a weight decrease assumed to be around 10%. The table presents values from 0.05% and up to 14%.

Energy

The thesis assumes that all the hydrocarbon losses generated by the regeneration gas can be utilized as fuel gas and thereby causes no real losses. Also most of the hydrocarbon losses associated with the amine process can be handled by the fuel gas system. The power demand, which goes into driving the pumps are considered somewhat less than for a pure amine solution, but the same principles as discussed for a pure amine solution and a pure molecular sieve solution still applies.

Weight

The weight of the amine-molecular sieve solution is based on slightly different values than for the pure solutions. The molecular sieve has less efficiency when combined with the amine solution and thereby has an increased weight. The amine process part has less weight than the pure amine because some of the work is done by the molecular process and thereby decreasing the needed capacity of the amine process. This therefor gives a weight reduction considered to be around 10%. These 10% have been chosen because one sees it as a good help in reducing the needed size for having a CO_2 removal unit handling only down to 500ppm instead of 50ppm.

5.1.4. Amine-membrane

The table for the amine-membrane solution is based on the report from UOP where the first 40% of the CO_2 is removed using a membrane and the rest is removed using

an amine process. The table shows values from 5% and up to 20% and using the same distribution between the amine and membrane for CO_2 removal between 5 and 12%. Between 12 and 20% the membrane will handle more and more of the CO_2 increasing by 2% for each percentage of CO_2 content, thus making the membrane remove 42% when the CO_2 content is 13%. This was chosen because it is natural that the membrane will handle more of the CO_2 in percentage with higher CO_2 content.

Energy

The energy demand/loss consists of two factors, one is the power consumption of the amine process, and the other is the hydrocarbon loss, which cannot be used as fuel for the gas turbines. The flow of permeate gas is around 40,000 kg/h, whereas the spare capacity of the fuel gas can only take around 20,000 kg/hr. This is dependent on the gas turbines actually being able to handle the permeate gas, which has a LHV of only 9.8 MJ/kg. Although the gas turbines will need more mass flow to compensate for the lower heating value. In order to find the hydrocarbon losses it is presumed that this stays the same for all the cases where the percentage removal of CO_2 is constant, and keeps on increases more or less linear above 12% CO_2 content. The power demand of the amine process is the same as a pure amine process, only using the CO_2 after the membrane. For example when the CO_2 level is at 12% the working CO_2 level for the amine process is at 7.2%, i.e. 60% of the total.

Weight

In order to find the weight of the combined amine-membrane solution it was used the numbers from the UOP Separex report that had an example for 12.3% CO_2. Thus giving the membrane and amine weights for each process. This was then scaled according to the parameters affecting the processes. The membrane was said to have a constant weight as long as the percentage CO_2 stayed the same. The amine has a linear effect and designed for the CO_2 after the membrane.

5.2 Weight Graph

The weight graph is divided in two, in order to get a better view of the extremely low CO_2 levels. These are in a different category and the differences will be much more visible on a cutout.

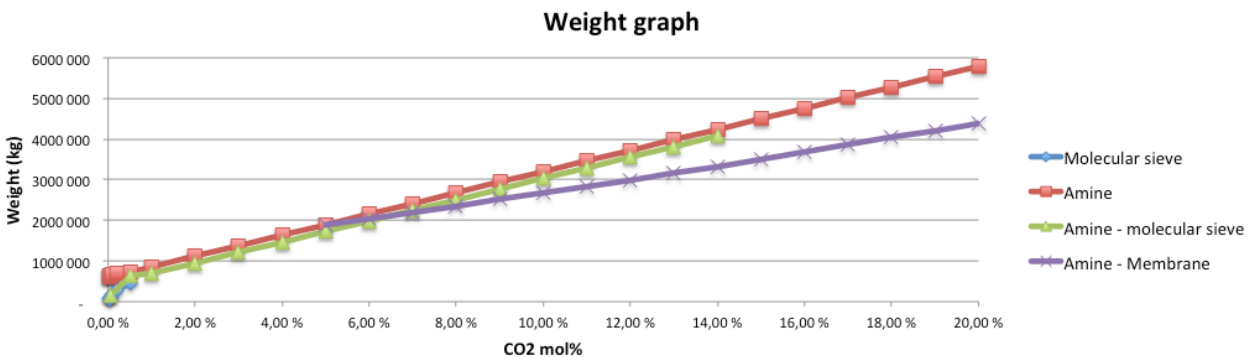

Figure 17: Weight graph

Figure 17 shows that as the CO_2 content increases the amine-membrane increase the advantage of the low weight amine process. This saves weight in the amine process and should be a choice from around 8-9%, where the advantage becomes significant to overcome the disadvantage of combined technologies.

<u>Very low CO_2</u>

In order to better view the case of very low CO_2, there is also a graph showing the weight graph for CO_2 levels less than 1%.

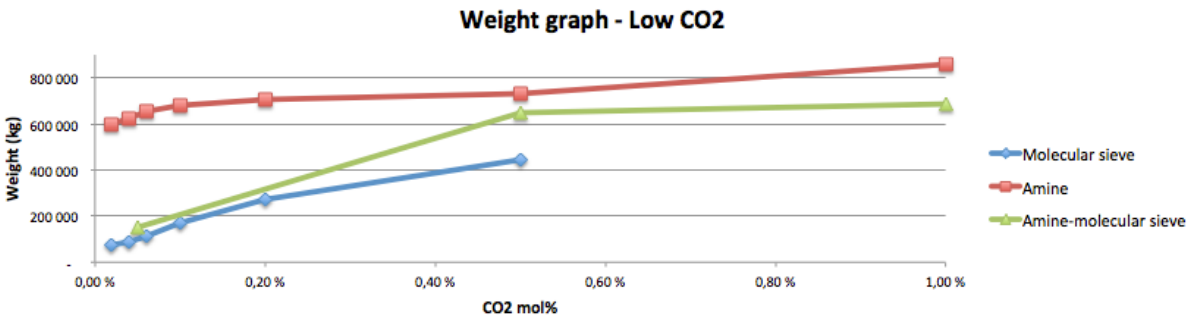

Figure 18: Weight graph low CO_2

The graph above shows the weight of three solutions for CO_2 levels under 1%. This illustrates that the molecular sieve scores very good on weight and is much due to the subtraction of the molecular sieve weight with a pure water removal. This is because the graph only shows weight increase associated with CO_2 removal.

5.3 Energy Graph

The energy graphs are based on both the energy demanded for compressor and pumps, it also includes the energy in the hydrocarbons that either will be flared or vented. The energy demand is not a simple case and is therefore discussed in more detail earlier.

Below are two graphs, one contains all the most suitable technologies and the second below contains all but the amine-membrane, which due to the hydrocarbon losses has a much higher energy demand.

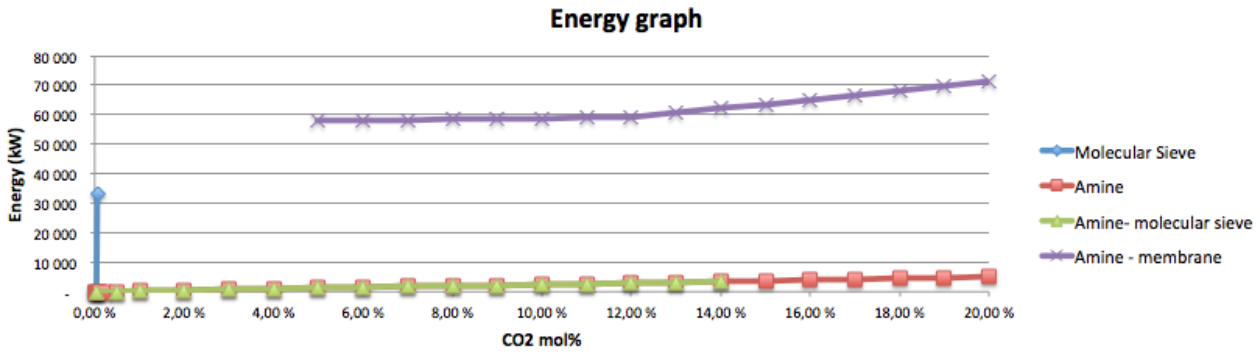

Figure 19: Energy graph with amine-membrane

When adding the amine-membrane solution in figure 19 the energy usage of the amine and amine-molecular sieve solutions become insignificant because of the high hydrocarbon losses. This is because, not all of the 40,000 kg/h permeate from the membrane is used as fuel for the gas turbines. The actual loss has been set to around half of the total losses.

The values of the molecular sieve are almost invisible because the values are for such small CO_2 levels and has almost no energy demand, with the exception of the last value shown at 35 MW.

Figure 20 shows in more detail how the amine and molecular sieve has almost an identical energy demand. It is still difficult to see the molecular sieve, but we see that combining the amine and molecular sieve has an insignificant effect on the energy.

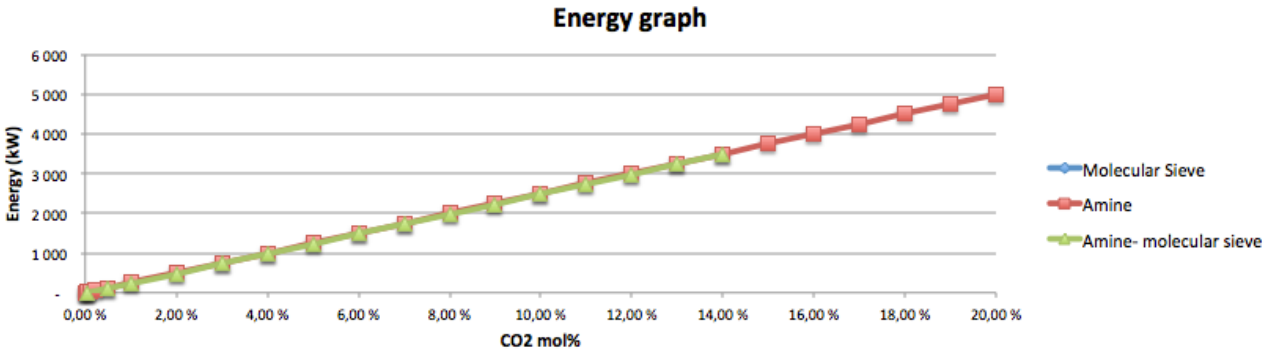

Figure 20: Energy graph without amine-membrane

Very low CO_2

The energy graph for very low CO_2 is showing the three technologies: molecular sieve, amine and amine-molecular sieve. This shows how the amine and molecular sieve have a quite linear increase with a little less energy needed with the amine-molecular sieve solution. The pure molecular sieve solution is seen down in the corner before increasing enormously.

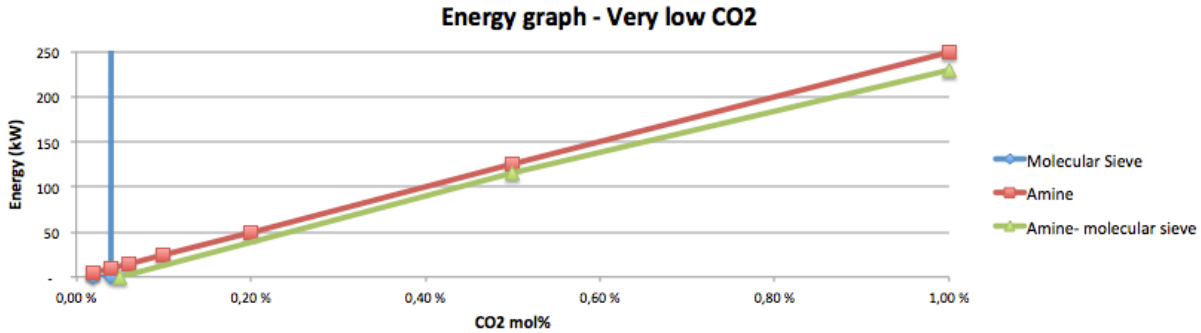

Figure 21: Energy graph showing very low CO_2

We can see that as the molecular sieve reaches 400ppm the energy increases dramatically due to the regeneration gas, which can no longer be utilized.

5.4 High CO_2 – Amine or Amine-membrane combination

This section discusses the selection of a combined membrane and amine system against a plain amine system. This is done in combination with looking at high CO_2 levels, as these systems are most applicable when the CO_2 level reaches levels above 12%. The report from UOP concerning a Membrane Separex unit will be used as the foundation. The report considers a CO_2 content of 12.3%, which is considered quite high compared to what is found in the Snøhvit field, which is only 5.2 mol% and also compared to world gas fields in operation today.

The table below shows significant data for an amine process and an amine-membrane process. It focuses on the advantages and disadvantages of an amine-membrane versus a pure amine process.

Case		Standalone amine	Amine with 7,3% hybrid		
Feed CO2 content	mole%	12,3			
Product CO2	mole%	0,005			
Mass flow	kg/hr	335000			
Feed pressure	bara	70			
Feed temperature	oC	25			
Hydrocarbon recovery	mole%	99,9	96,3	-3,6	Negative
Heat requirements	kW	74888	42862	-32026	Positive
Compression requirement	MW	3,06	1,72	-1,34	Positive
Pressure loss	bars	0,2	2,71	2,51	Negative
Estimated plot area	m2	756	726	-4,0 %	Positive
Estimated dry weight	MT	3800	2900	-23,7 %	Positive
Estimated Operating weight	MT	4970	3450	-30,6 %	Positive
Comment: all values are estimated and all values are shown with "," as a decimal sign					

Table 2: Comparison of technologies for 12.3% CO_2

5.4.1. Energy consumption / Opex

The energy consumption can be seen as the main operational costs and consists of three groups of energy usage. One is the hydrocarbon loss, which is not direct consumption, but the energy lost in form of hydrocarbons is significant and should be taken into account as an energy usage. Also the heat energy is an important factor, although does not have directly affect the energy/cost requirement. In the end is the power consumption, which goes into driving the pumps and compressors.

Hydrocarbon recovery

As seen in table 2, the amine membrane combination is the process with the largest hydrocarbon losses. The combined system has a loss equivalent to 169 MW when calculated using LHV. This loss is complex and will lead to less LNG product and thereby less work done by the downstream processes. The hydrocarbon losses can also be utilized in the gas power turbines, thereby minimizing the damage of hydrocarbon losses.

Heat requirements

The heat requirement for the hybrid solution is only around 60% of what it was for the amine solution. Meaning that less amine solution will be in circulation, and will cause a large save in heat requirement although this does not affect the energy balance of the FPSO significantly.

Power requirement

The power is mainly used to drive the amine pump and is halved when using the hybrid solution. The lower power requirement is due to less flow of amine solution. When adding a single membrane process, there is no need for extra compressors or pumps.

5.4.2. Complexity / Capex

Complexity is a good measure for investment costs or capex, as this can be seen in context with equipment count, weight and plot size. Both weight and plot size are indicators of the size and complexity of the system.

Weight

The weight favours the amine-membrane solution, which is due to the reduced use of the amine process. The membrane does not use liquids and can be designed out of lightweight materials, as long as it can handle the high pressures. All this adds to the weight savings.

Plot size

The plot size is almost equal which shows that the process is almost constant. This is because the membrane is quite large and contingent on area in order to remove CO_2.

5.5 Average CO_2 – Amine / Amine-molecular sieve / Amine-membrane

In this section the focus will be on CO_2 levels between 2% and 12%, as this is the mid category of CO_2 levels. Typically gas fields in the North Sea will be categorized here, such as the Snøhvit field, which has a CO_2 content of around 5%. The most common solution for this region is an amine process although this project will look at combining both with a molecular sieve and a membrane. The membrane will become more preferred with higher CO_2 and the amine-molecular sieve may be good for overall usage.

Case		Amine	Amine-molecular sieve	Amine-membrane
Feed CO2 content	mole%	6		
Product CO2	mole%	0,005		
Mass flow	kg/hr	300000		
Feed pressure	bara	70		
Feed temperature	oC	25		
Hydrocarbon recovery	mole%	99,9	90,2	96,3
Heat requirements	kW	34535	32082	19163
Compression requirement	MW	1,5	1,5	0,9
Pressure loss	bars	0,2	1,2	2,91
Estimated plot area	m2	-	-	-
Estimated dry weight	MT	2160	1990	2047
Comment: all values are estimated and all values are shown with "," as a decimal sign				

Table 3: Comparison of technologies for 6% CO_2

5.5.1. Energy consumption / Opex

The energy consumption consists of three factors; the first is the hydrocarbon recovery, which deals with the hydrocarbon losses. The second is the heat requirement and the third is the power requirement, which can be considered the more direct energy consumer.

Hydrocarbon recovery

The amine solution has the best hydrocarbon recovery and is much due to the chemical bonding. The chemical bonding utilizes temperature differences to remove the CO_2 and improve the CO_2 absorption. The amine-molecular sieve has a low hydrocarbon recovery because of the regeneration gas, which uses the clean hydrocarbon gas to regenerate the sieves. While in the amine-membrane solution the hydrocarbon losses are due to the low selectivity of the membrane causing 40% methane content in the CO_2 rich permeate. This clearly shows how superior the amine solution is with regards to hydrocarbon recovery.

Heat required

The amine process is the most heat demanding, and it affects all the solutions. The combined solutions will have less heat demand because other technologies do parts of the CO_2 removal and they have a lower heat demand.

Power required

The power requirement is mainly for running the pumps in the amine process. Both of the other processes use pressure as the driving force. If the pressure only has minor affects on the downstream processes this shouldn´t be a problem. Alternatively the input or output pressure may be increased

5.5.2. Complexity / Capex

All these systems are reasonably complex and require considerably equipment, especially for the amine process. The complexity also becomes larger when dealing with a dual process solution. The plot size is an important factor, but could not be estimated due to missing values.

Weight

The weight of the amine is a significant dis-advantage and influences all of these solutions. This is mainly due to the large columns and using a solution.

5.6 Very low CO_2 – Amine / molecular sieve / amine-sieve

During this section, examples of the technologies suitable for very low CO_2. will be discussed. This specific example uses a CO_2 content of just 0.5% and there are three solutions that may apply. They will be discussed according to some key parameters such as hydrocarbon recovery, weight and heat requirement.

Case		Molecular Sieve	Amine	Amine-molecular sieve
Feed CO2 content	mole%	0,5		
Product CO2	mole%	0,005		
Mass flow	kg/hr	300000		
Feed pressure	bara	70		
Feed temperature	oC	25		
Hydrocarbon recovery	mole%	82,4	99,9	90,2
Heat requirements	kW	6000	3000	4000
Compression requirement	MW	0	0,1	0,1
Pressure loss	bars	1,0	0,2	1,2
Estimated plot area	m2	-	-	-
Estimated dry weight	MT	445	730	650
Comment: all values are estimates and all values are shown with "," as a decimal sign				

Table 4: Comparison of technologies for 0.5% CO_2

5.6.1. Energy consumption / Opex

The energy consumption is closely related to the operational costs and this is usually the largest running cost. The energy consumption as discussed here, contains two main elements, one is the power and heat requirements, the other are the hydrocarbon losses. The hydrocarbon losses are significant for the molecular sieve.

Power consumption

The molecular sieve has an advantage, as it doesn´t require power. On the other hand, the other two solutions don´t require much they either. Because of the low CO_2 level the energy consumption required for the amine is minimal and so it the amine-molecular sieve.

Heat consumption

The heat consumption is almost equal for the three solutions, and as heat is an excess on the FPSO neither of these should be a problem. All these solutions require the heat delivery system and thereby reducing the affects of the different heat requirements.

Hydrocarbon recovery

The hydrocarbon losses are significant for the molecular sieve because of the regeneration gas. This means that the amine solution with a hydrocarbon loss of only 0.1% is much better than the rest. Although it might be possible to utilize parts of the

regeneration gas, it will not be enough to make the pure molecular sieve solution profitable for this case.

5.6.2. Complexity / Capex cost

Complexity is closely related to the capital expenditure and can also be seen in connection with weight and size. Weight is often used as a way of estimating investment costs, and is therefore useful to compare. The plot area has a large affect on an FPSO, since space is very limited. However the plot size is an important factor, but could not be estimated due to missing values on some of the solutions.

Weight

Weight is the strength of the molecular sieve this is much due to the installation already existing in the LNG process chain as a water removal unit. The weight increase is therefore much less than can be expected.

5.7 Summary

The tables and graphs are meant as a representation of how the different technologies and further study is needed to ensure accurate results. The graphs are developed using data from reports and scaled in order to acquire a wide range of values. The weight graph is suitable for comparing the weight at different levels and applies linear expansion. The energy graph is developed much the same way as the weight although all processes start with a very low power and heat consumption and increase linearly. As the energy consumption is a relative term that depends on the hydrocarbon losses and whether or not they should be taken into account.

The examples give a good overview of the most important aspects of the technologies compares to each other. They take into account the both the complexity and the energy consumption, which are seen as the investment and operational costs. The amine shows good results for most of the cases although the membrane-amine shows better results on the examples containing higher CO_2 content. The amine-molecular sieve shows slightly lower weight, but has a much more difficult hydrocarbon loss. The molecular sieve is not a prominent solution in any of these examples. This shows that the molecular sieve needs a lower CO_2 than 0.5%.

Chapter 6 - Final Discussion

4 technologies have been selected to be best suited for handling the CO_2 removal all the way from 20% and down to 0.01%. They will in this chapter be presented with focus on where each of them is most suitable and what premises this is built upon.

6.1 Molecular Sieve

The molecular sieve can be used as long as the regeneration stream does not increase beyond what can be handled by the fuel system. Although it may be viable if only smaller amounts of gas are flared, although it will increase the operational costs. The investment costs are most likely lower on the molecular sieve and it may be viable even with relatively higher operational costs compared to other processes.

The molecular sieve has a very narrow scope of usage area and is only a viable option for CO_2 levels below 0.05%. Although in certain cases the molecular sieve may also be applicable for CO_2 contents between 0.05% and 0.1%. The amine solution may become a better choice as it has a flexible design and 4 different main designs ranging in complexity. The balance between operating and investment costs should be taken into consideration when discussing the possibility of using the molecular sieve for CO_2 between 0.05% and 0.1%. The lifetime of the FPSO greatly affects the choice of technology, and since the design should last for 20 years, there is a high focus on operating costs.

In order to use the molecular sieve solution, the gas turbines will have to be designed to handle the regeneration stream. This includes both the flow rate and the composition, which affects the heating value and may cause problems when becoming smaller than the limit of 15 MJ/kg in heating value of the fuel. The design also depends on the molecular sieve handling both CO_2 and the water. For proper utilization it is important that the timing of the regeneration is equal for both CO_2 and water. This is important in order to fully utilize the membranes.

6.2 Amine – Molecular Sieve

The amine-molecular sieve design has a limited usage, as it will have little or no gain by adding a molecular sieve, and the system becomes much more complex. With the

regeneration gas and increased design difficulties regarding the sieve and the H_2O/ CO_2 content. This technology may be applicable between 0-5%, and will cause a more complex system and most likely balance out the gain.

Complexity is high in this solution because of the difficulty concerning the limited operating region of the molecular sieve. Although this solution may be more efficient because of lower amine usage and the molecular sieve's low weight, this solution may cause some unneeded complications due to the regeneration gas.

However this combination may be applicable as a safeguard as earlier mentioned. The solution can then utilize the safety and stability without dealing with the regeneration gas problem.

6.3 Amine

The amine process is a widely used technology and has a large usage area. The question is usually not whether it can be used or not, rather if there are other technologies more efficient. Often the most efficient solution is the amine process combined with a different process.

Earlier chapter have viewed examples of how the amine compares to other technologies. Often the amine solution has a higher weight, but much better hydrocarbon recovery. Higher weight can be linked to higher investment costs, making the amine solution the most expensive solution to invest in, however, because of the high hydrocarbon recovery it may be profitable through the lifetime of the equipment.

The amine process is highly dependent on a large heat source and often utilizes the waste heat from of the gas turbines. If the gas turbines were replaced with for example landline there would be a problem supplying heat to the amine process.

6.4 Amine – Membrane

The amine-membrane solution has a large potential for gas streams containing large amounts of CO_2. The membrane can handle bulk removal and the amine handles the lower CO_2 concentrations. The membrane requires little or no energy and also less space compared to the savings in the amine process. Because the membrane has

almost constant efficiency for a given CO_2 removal percentage, the effects of combining an amine and membrane process will increase when the CO_2 level increases.

This solution however may result in much higher levels of hydrocarbon losses and also a larger CO_2 rich stream exiting the solution. The stream may contain up to 40% methane and contains significant amounts of energy. This may be used as fuel for the gas turbines given the right condition. The permeate exiting the membrane has a relatively high flow rate; almost double the amount of the balance gas. Replacing the balance gas is the easiest, but may cause difficulties because of the low heating value of just 9.8 MJ/kg. This is lower than what the gas turbines can manage, according to the 15 MJ/kg running limit set by GE. However the gas will be mixed with the gases coming from other parts of the LNG production chain and will counter this. The permeate gas has twice the flow rate of the balance gas, but only ¼ of the heating value, it should therefore not be a problem to utilize all the permeate gas. It may still be a need for balance gas, and it will help the heating value of the total to become high enough. The initial fuel design has a LHV of 37.9 MJ/kg and is much higher than the 20 MJ/kg that GE has managed to design their turbine for.

This solution is however vulnerable to increased flow rate because of increased permeate. It may be critical if the permeate increases in flow rate or CO_2 content. This thesis has mainly looked at a gas stream of 300,000 kg/h, but this solution should have no problem handling somewhat higher flow rates. This solution will probably be best for CO_2 concentrations of 6% or above. It may however be hindered by the complexity of a combined process.

Chapter 7 - Conclusions and Further Work

Out of the four solutions focused on, the amine-molecular sieve does not seem to offer enough benefits to be applicable. It may save some energy and weight, but will be more complex and should therefore be avoided. The three other technologies offer each their region of preferred usage, with the molecular sieve offering the smallest diversity. The amine and amine-membrane solution are both applicable for medium to higher CO_2 content, with the membrane enabling large benefits in combination with the amine solution.

For the lowest CO_2 content of less than 0.1% the molecular sieve is highly applicable because it saves having a second process and thereby saves large investment costs. The gas turbines will however require design changes. Although the regeneration gas flow rate will leave around 10,000 kg/h to be flared, the benefit of not using a second system can outweigh the energy lost. Replacing other fuel sources with the regeneration gas may also be possible. This might however require design altercations to reduce the flow rate of their hydrocarbon rich gas stream.

For CO_2 levels above 0.1% it is recommended to use the amine, as it is a simple process that is easily adaptable for different levels of CO_2. Although below 1% CO_2 content it is less efficient than for higher CO_2 levels. It has a very high hydrocarbon recovery and also has relatively low power consumption. It is however limited by the heat available and it may also become too large for placement on an FPSO

The amine-membrane solution will replace the amine solution with higher CO_2 levels. The amine-membrane solution will most likely surpass the amine solution when the CO_2 level reaches 6-8%, making this the preferred choice. This process depends highly on the accepted level of complexity. It also requires careful pre-treatment and finding the correct CO_2 removal balance. In order to integrate this solution the permeate should be used as fuel, thereby requiring design altercations to the gas turbines.

7.1 Further Work

Further study should look at the balance between investment costs and operational costs. The technologies often have very different investment costs, which effects are enhanced by the placement on a ship. Technologies as the membrane and molecular sieve may also have high operating costs if the regeneration or permeate gas is not fully utilized. Effects of changes to the power supply also affect the choice of technologies.

A closer examination of each case is needed when choosing the final design. This work is not detailed in all cases and should be carefully analysed when the composition and the conditions of operation are known. An example where an alternative to amine solution should be closely considered is if the FPSO is placed in rough seas. Cases with under 1% CO_2 will also need a closer analysis of the regeneration and the fuel system.

References

1. GasChem. *Evaluation of likelyhood of encountering CO2 and H2S*. 2011; Available from: http://www.gaschem.com/evalu.html.
2. CB&I, *Power Generation options LNG FPSO*, 2009.
3. CB&I, *Nitrogen Rejection Study, Höegh LNG FPSO*, 2009.
4. Electric, G., *GE Aeroderivative Gas Turbines - Design and Operating Features.* 2000.
5. UOP, *Overview of UOP Gas Processing Technologies and Applications*, 2009.
6. UOP, *UOP Amine Guard FS Technology for Acid Gas Removal.* 2009.
7. Lidal, H., *Carbon Dioxide Removal in Gas Treating Processes*1992.
8. UOP, *Technical proposal for a Separex unit & AGFS Unit*, 2010.
9. Vozniuk, I.O. and L.E. Øi, *Optimizing CO2 absorption using split stream configuration*, 2010, Telemark University College: Porsgrunn.
10. Alpha, T., *Extracting CO2 from coal-fired plants using the benfield process*, 2005.
11. DOW, *Selexol Solvent for gas treating.* 2004.
12. UOP, *MOLSIV Molecular Sieves.* 2006.
13. Emerson, *Molecular Sieve Desiccant Dehydrator for Natural Gas.* 2004.
14. Charrier, F., *CECA Solutions for Natural gas Processing*, 2009.
15. Corporation, C. *Dehydration and Organic Sulfur Removal Process using Molecular Sieve (MS Treater)*. 2011.
16. Sandru, N., *Development of a FSC membrane for selective CO2 capture*, in *Chemical Engineering*2009, NTNU: Trondheim.
17. UOP, *UOP Separex Membrane Technology.* 2009.
18. UOP, *Overview of UOP Gas Processing Technology and Applications.* 2009.
19. Soltanieh, M. and A.H.S. Saeadi, *Modelling and simulation of mebrane-absorption hybrid systems for CO2 capture from natural gas.* 2003.
20. CB&I, *Höegh LNg - Vendor evaluation - Dehydration unit*, 2008.
21. Østerbø, A.M., *LNG anlegg drevet av kraft fra nettet (Kryogen CO2-utskilling)*, 2008.
22. Valencia, J.A. and B.K. Mentzer, *Processing of High CO2 and H2S Gas with Controlled Freeze Zone Technology*, 2008.
23. Dorao, C., *TEP08 LNG*, 2010.

Appendix A – Separex user data

Separex sytem used for CO2 removal

Country	Application	Capacity (MSCFD)	Inlet %	Product %	Start-up
USA	Natural gas	1000	10	1,5	1989
USA	Landfill gas	5000	50	1,5	1998
USA	Landfill gas	5000	50	1,5	1998
USA	Landfill gas	5000	50	1,5	1998
USA	Landfill gas	5000	50	1,5	1998
Pakistan	Natural gas	697000	6	2	2001
Nigeria	Natural gas	200000	6,6	2	2002
USA	Natural gas	5000	10	2	2001
Pakistan	Natural gas	256000	10	2	1993
USA	Natural gas	1500	10	2	1993
USA	Natural gas	3600	10	2	1992
USA	Natural gas	4000	10	2	1992
USA	Natural gas	750	10	2	1991
USA	Natural gas	580	10	2	1991
USA	Natural gas	1400	10	2	1991
USA	Natural gas	1000	10	2	1989
USA	Natural gas	3500	10	2	1982
USA	Natural gas	600	10	2	1982
USA	Natural gas	5000	12	2	1999
USA	Natural gas	15000	12	2	1994
USA	Natural gas	15000	12	2	1994
USA	Natural gas	15000	18	2	1993
USA	Natural gas	36000	22	2	2000
USA	Landfill gas	360	45	2	1992
USA	Biogas	1700	50	2	2002
Egypt	Natural gas	107000	5	3	1997
Egypt	Natural gas	218000	6	3	1997
Taiwan	Natural gas	30000	7	3	1996
USA	Natural gas	2000	8	3	2001
USA	Natural gas	5000	8	3	1996
Egypt	Natural gas	116000	9	3	2007
Egypt	Natural gas	116000	9	3	2007
Pakistan	Natural gas	210000	10	3	1993
USA	Natural gas	5000	10	3	1993
USA	Natural gas	30000	10	3	1993
USA	Natural gas	40000	10	3	1992
USA	Natural gas	1500	10	3	1991
USA	Natural gas	1500	10	3	1991
USA	Natural gas	1000	10	3	1991
USA	Natural gas	4000	10	3	1991
USA	Natural gas	6000	10	3	1990
USA	Natural gas	4200	10	3	1990
USA	Natural gas	750	10	3	1990
USA	Natural gas	1500	10	3	1988
USA	Natural gas	18000	10	3	1987
USA	Natural gas	3500	10	3	1984
USA	Natural gas	8000	11	3	1996
USA	Natural gas	10000	12	3	2000
Pakistan	Natural gas	200000	12	3	2000
Australia	Natural gas	32000	33	3	2000
USA	Natural gas	10000	55	3	1993
USA	Natural gas	4000	60	3	1993
USA	Landfill gas	2000	42	3,5	1984
Australia	Landfill gas	2000	45	5	1990
Maxico	Natural gas	120000	70	5	1997
Malaysia	Natural Gas Offshore	640000	44,5	8	2007
USA	Natural gas	40000	19	10	1998
Indonesia	Natural gas	46000	23	10	1997
USA	Natural gas	30000	30	10	1996
Thailand	Natural Gas Offshore	520000	35	10	2010
USA	Natural gas	40000	72	13	2001
Argentina	Natural gas	12000	50	18	1995
Thailand	Natural Gas Offshore	32000	54	20	1998
Indonesia	Natural gas	254000	40	21	2005
Thailand	Natural Gas Offshore	590000	40	22	2008

Appendix B – Amine Guard user data

Amine Guard FS User Data

Location	Capacity MMSCFD	Feed CO2	Product CO2	S/U Date
Mid East	750	2,30 %	50	2004
Mid East	1500	2,30 %	50	2005
Mid East	750	2,30 %	50	2006
Mid East	3200	2,31 %	8000	2006
Mid East	3060	2,52 %	25	2007
Far East	51	3 %	80	2002
Mid East	93	4 %	100	1998
Mid East	1262	4,00 %	5500	2006
Mid East	794	4,60 %	9400	2007
Mid East	122	5,20 %	30000	1994
Mid East	195	7,20 %	500	2002
Mid East	128	8,00 %	50	2006
Mid East	520	8,30 %	29000	2000
Mid East	52	14,30 %	5000	1999
Far East	425	23,00 %	40000	2005
Far East	800	23,00 %	3000	2008

e

Appendix C – Fuel gas data

Original design data

Flowrate regeneration gas	19388,6	kg/hr
Flowrate exit dehydration	283545	kg/hr
Fuel gas without balance gas	19702	kg/hr
Balance gas	21949,5	kg/hr
Total fuel gas	41651,5	kg/hr

Appendix D – Ceca simulation

CECA simulation results

Pressure	68	bara
Mass flow	300	tons/hr
Temperature	25	oC
MW	20,4	kg/kmol

	1	2	3	4	5	6	7	8
Case	Pure drying	After amine upset 200ppm	No amine 200ppm CO2	No amine 400ppm	No amine 600ppm	No amine 1000ppm CO2	No amine 2000ppm CO2	No amine 2000ppm CO2 3+2
CO2 cc (ppmV)	50	200	200	400	600	1000	2000	2000
Configuration	2+1	2+2	2+2	2+2	2+2	2+2	2+2	3+2
Gas Temperature (Co)	38,4	38,4	25	25	25	25	25	25
Adsorption time (hr)	16	4	4	4	4	4	4	4,5
Total MS weight (kg)	73350	1890000	147600	163200	189600	242400	349200	320050
Vessel ID (mm)	2600	3200	3000	3100	3200	3300	3600	3400
Insulation	External	Internal	Internal	Internal	Internal	Internal	Internal	Internal
Bed height (mm)	6756	7831	6952	7204	7850	9448	2 * 5718	9406
Bed DP (bar, SoR)	0,37	0,38	0,4	0,37	0,36	0,38	0,33	0,16
Regen gas (kg/hr)	24141	25489	20480	22758	25944	33681	48246	47336
Net Product (kg/hr)	300000	274511	279520	277242	274056	266319	251754	252664
Product percentage	100 %	92 %	93 %	92 %	91 %	89 %	84 %	84 %

CO2 cc (ppmV)	200	400	600	1000	2000
Total MS weight (kg)	147600	163200	189600	242400	349200

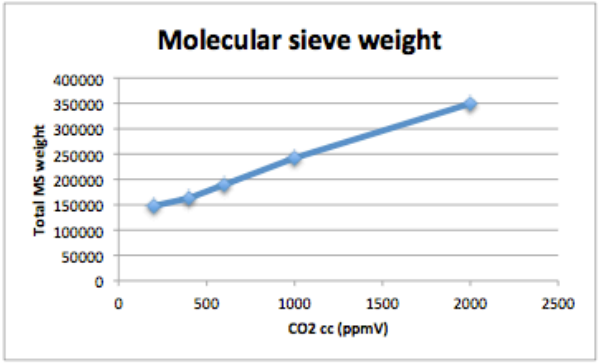

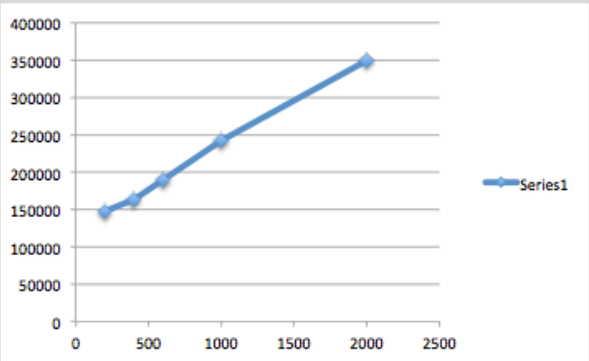

Appendix E – Membrane-amine system

Comparison of Membrane and amine system

Mass flow	335000	kg/hr
CO2 content	12,3	mol%
feed pressure	70	
Feed temperature	25	

		Membrane		Amine					
Membrane case comparison		Single stage	Two stage				Combined	Change from Amine to hybrid	
Feed CO2 content	mole%	12,3	12,3	7,3	12,3	12,3			
Product CO2	mole%	7,3	2,5	0,00005	0,00005	0,00005			
Hydrocarbon recovery	mole%	96,4	96,5	99,9	99,9	96,3		-3,6	Negative
Relative membrane area	%	22	100						
Heat requirements	kW	3390	5540	39472	74888	42862		-32026	Positive
Compression requirement	MW	0	11,13	1,72	3,06	1,72		-1,34	Positive
Plot area	m2	90	190						
Dry weight	MT	390	790						
Operating weight	MT	580	1200						
Pressure loss	bars	2,55	2,52	0,16	0,2	2,71		2,51	Negative

Appendix F – Background data graphs

	Mass flow (kg/hr	300 000		LHV reg. Gas	47		LHV perm. Gas	9,8				

Molecular sieve

CO2 mol%	**0,02 %**	**0,04 %**	**0,06 %**	**0,10 %**	**0,20 %**	**0,50 %**
Regen gas (kg/hr)	20 480	22 758	25 944	33 681	48 246	52 800
Real hydrocarbon losses(kg/hr)	-	-	2 544	10 281	24 846	29 400
Real hydrocarbon losses (MW)	-	-	33 213	134 224	324 378	383 833
Power demand	-	-	-	-	-	
Total energy demand/loss	**-**	**-**	**33 213**	**134 224**	**324 378**	**383 833**
Total MS weight (kg)increase	**72 600**	**88 200**	**114 600**	**167 400**	**274 200**	**445 000**

Amine

CO2 mol%	**0,02 %**	**0,04 %**	**0,06 %**	**0,10 %**	**0,20 %**	**0,50 %**	**1 %**	**2 %**	**3 %**	**4 %**	**5 %**	**6 %**
Real hydrocarbon losses	-	-	-	-	-	-	-	-	-	-	-	-
Power demand (kW)	5	10	15	25	50	125	250	500	750	1 000	1 250	1 500
Total energy demand	**5**	**10**	**15**	**25**	**50**	**125**	**250**	**500**	**750**	**1 000**	**1 250**	**1 500**
Total weight (kg)	**600 000**	**626 000**	**652 000**	**678 000**	**704 000**	**730 000**	**860 000**	**1 120 000**	**1 380 000**	**1 640 000**	**1 900 000**	**2 160 000**

Amine molecular sieve

CO2 mol%	**0,05 %**	**0,50 %**	**1 %**	**2 %**	**3 %**	**4 %**	**5 %**	**6 %**	**7 %**	**8 %**	**9 %**	**10 %**
Regen gas (kg/hr)	23 400	23 399	23 400	23 400	23 400	23 400	23 400	23 400	23 400	23 400	23 400	23 400
Real hydrocarbon losses(kg/hr)	-	-	-	-	-	-	-	-	-	-	-	-
Real hydrocarbon losses (MW)	-	-	-	-	-	-	-	-	-	-	-	-
Power demand	-	115	230	480	730	980	1 230	1 480	1 730	1 980	2 230	2 480
Total energy demand	**-**	**115**	**230**	**480**	**730**	**980**	**1 230**	**1 480**	**1 730**	**1 980**	**2 230**	**2 480**
Weight increase MS	150 000	150 000	150 000	150 000	150 000	150 000	150 000	150 000	150 000	150 000	150 000	150 000
Amine weight	-	500 000	540 000	800 000	1 060 000	1 320 000	1 580 000	1 840 000	2 100 000	2 360 000	2 620 000	2 880 000
Total weight	**150 000**	**650 000**	**690 000**	**950 000**	**1 210 000**	**1 470 000**	**1 730 000**	**1 990 000**	**2 250 000**	**2 510 000**	**2 770 000**	**3 030 000**

Amine-membrane

40% membrane up to 12,3%

Per percent over 12,3% the membrane increases by 2%

CO2 mol%	**5 %**	**6 %**	**7 %**	**8 %**	**9 %**	**10 %**	**11 %**	**12 %**	**13 %**	**14 %**	**15 %**	**16 %**
permeate gas (kg/hr)	44 426	44 426	44 426	44 426	44 426	44 426	44 426	44 426	44 926	45 426	45 926	46 426
Real hydrocarbon losses(kg/hr)	21 026	21 026	21 026	21 026	21 026	21 026	21 026	21 026	21 526	22 026	22 526	23 026
Real hydrocarbon losses (MW)	57 237	57 237	57 237	57 237	57 237	57 237	57 237	57 237	58 599	59 960	61 321	62 682
Power demand	750	900	1 050	1 200	1 350	1 500	1 650	1 800	1 950	2 100	2 250	2 400
Total energy demand	**57 987**	**58 137**	**58 287**	**58 437**	**58 587**	**58 737**	**58 887**	**59 037**	**60 549**	**62 060**	**63 571**	**65 082**
Membrane weight (kg)	390 000	390 000	390 000	390 000	390 000	390 000	390 000	390 000	410 000	430 000	450 000	470 000
Amine weight	1 500 000	1 656 000	1 812 000	1 968 000	2 124 000	2 280 000	2 436 000	2 592 000	2 748 000	2 904 000	3 060 000	3 216 000
Total weight	**1 890 000**	**2 046 000**	**2 202 000**	**2 358 000**	**2 514 000**	**2 670 000**	**2 826 000**	**2 982 000**	**3 158 000**	**3 334 000**	**3 510 000**	**3 686 000**

7 %	8 %	9 %	10 %	11 %	12 %	13 %	14 %	15 %	16 %	17 %	18 %	19 %	20 %
-	-	-	-	-	-	-	-	-	-	-	-	-	-
1 750	2 000	2 250	2 500	2 750	3 000	3 250	3 500	3 750	4 000	4 250	4 500	4 750	5 000
1 750	**2 000**	**2 250**	**2 500**	**2 750**	**3 000**	**3 250**	**3 500**	**3 750**	**4 000**	**4 250**	**4 500**	**4 750**	**5 000**
2 420 000	**2 680 000**	**2 940 000**	**3 200 000**	**3 460 000**	**3 720 000**	**3 980 000**	**4 240 000**	**4 500 000**	**4 760 000**	**5 020 000**	**5 280 000**	**5 540 000**	**5 800 000**

11 %	12 %	13 %	14 %
23 400	23 400	23 400	23 400
-	-	-	-
-	-	-	-
2 730	2 980	3 230	3 480
2 730	**2 980**	**3 230**	**3 480**
150 000	150 000	150 000	150 000
3 140 000	3 400 000	3 660 000	3 920 000
3 290 000	**3 550 000**	**3 810 000**	**4 070 000**

17 %	18 %	19 %	20 %
46 926	47 426	47 926	48 426
23 526	24 026	24 526	25 026
64 043	65 404	66 765	68 126
2 550	2 700	2 850	3 000
66 593	**68 104**	**69 615**	**71 126**
490 000	510 000	530 000	550 000
3 372 000	3 528 000	3 684 000	3 840 000
3 862 000	**4 038 000**	**4 214 000**	**4 390 000**

Appendix G – Gas composition calculations

Gas Composition

				GAS PROPERTIES			
			Chemical symbol:	CH_4	C_2H_6	C_3H_8	iC_4H_{10}
Selected gas composition:		Mol fraction (y):		**76,200 %**	**3,300 %**	**2,800 %**	**0,700 %**
Property:	**Symbol**	**Weighted properties**	**[unit]**	**CH_4**	C2H6	C3H8	**C4H10**
Atomic mass (molecular weight)	M	-	[g/mol]	16,043	30,07	44,09	58,124
Mol weight x %	y·M	19,98	[g/mol]	12,225	0,992	1,235	0,407
Weight fractions		100,00 %	%	61,19 %	4,97 %	6,18 %	2,04 %
Molar heat capacity MC_P (@-25 [°C])	$MC_{P(-25)}$	-	[kJ/kmole ·C]	34,301	47,131	44,097	58,124
Molar heat capacity MC_P (@+75 [°C])	$MC_{P(+75)}$	-	[kJ/kmole ·C]	37,870	48,695	83,585	97,310
Mix spesific heat capacity (@-25 [°C])	$y \cdot MC_{P(-25)}$	34,66	[kJ/kmole ·C]	26,14	1,56	1,23	0,41
Mix spesific heat capacity (@+75 [°C])	$y \cdot MC_{P(+75)}$	39,07	[kJ/kmole ·C]	28,86	1,61	2,34	0,68
Component Critical temperature	T_C	-	[°K]	190,6	305,4	369,8	408
Pseudo-critical temperature	$y \cdot T_C$	194,43	[°K]	145,24	10,08	10,35	2,86
Critical pressure	p_C	-	[Pa]	4 604 000	4 880 000	4 249 000	3 648 000
Pseudo-critical pressure	$y \cdot P_C$	4 416 550	[Pa]	3 508 248	161 040	118 972	25 536
Acentric factor	ω	-	[-]	0,0115	0,099	0,152	0,17
Mix acentric factor	ω_{MIX}	0,0246	[-]	0,008763	0,003267	0,004256	0,00119
Spesific gas constant	R	455,47	[J/kg·K]	518,23	276,49	188,57	143,04
Gas spesific gravity (relative to air)		0,690	[kg/kg air @ 15 °C]	0,554	1,049	1,562	2,067
Gas density	ρ	0,847	[kg/m^3]	0,68	1,286	1,915	2,534
Redlich-Kwong constant (a)	a	33,16115	[bar m^6 K$^{(1/2)}$ / kmol^2]	32,11		182,23	
Redlich-Kwong constant (b)	b	0,02863525	[m^3/kmol]	0,02965		0,06242	
Lower heating value	LHV	37,9	Mj/kg	50,016	47,52	46,39	45,636
Pseudo Lower heating value	y·LHV	757	kj/mol	611,433896	47,1545712	57,2693828	18,567828
Higher heating value	HHV	41,9	Mj/kg	55,617	51,916	50,367	49,446
Pseudo Higher heating value	y·HHV	838	kj/mol	679,90481	51,516766	62,179069	20,117995
LNG Density?	ρ		kg/m3	415,00	546,49	583,00	593,40
Pseudo lng density	y*ρ	369,5	kg/m3	316,23	18,03	16,32	4,15

												Sum MOL %
nC_4H_{10}	C_4H_{10}	iC_5H_{12}	nC_5H_{12}	C_6H_{14} (Pseudo C6	H_2O	N_2	O_2	CO_2	CO	S	SO_2	[%]
0,400 %	0,200 %	0,200 %	0,100 %	0,070 %	0,000 %	14,000 %	0,000 %	1,300 %	0,000 %	0,000 %	0,000 %	99,27 %
C4H10	C4H10	C5H12	C5H12	C6H14	H2O	N2	O2	CO2	CO	S	SO2	
58,12	58,12	72,151	72,15	86,178	18,02	28,01	32	44,01	28,01	32,065	64,06	
0,232	0,116	0,144	0,072	0,060	0,000	3,921	0,000	0,572	0,000	0,000	0,000	
1,16 %	0,58 %	0,72 %	0,36 %	0,30 %	0,00 %	19,63 %	0,00 %	2,86 %	0,00 %	0,00 %	0,00 %	
85,277	85,277	101,897		123,401	33,383	29,079	29,131	34,7	29,087			
110,334	85,277	135,572		162,308	33,832	29,140	29,647	39,261	29,193			
0,34	0,17	0,20	0,00	0,09	0,00	4,07	0,00	0,45	0,00	0,00	0,00	
0,44	0,17	0,27	0,00	0,11	0,00	4,08	0,00	0,51	0,00	0,00	0,00	
425,2	425	460,3	469,7	507,4	647,3	126,1	154,6	304,2				
1,70	0,85	0,92	0,47	0,36	0,00	17,65	0,00	3,95	0,00	0,00	0,00	
3 797 000	3 797 000	3 369 000		3 012 000	22 100 000	3 394 000	5 043 000	7 382 000				
15 188	7 594	6 738	0	2 108	0	475 160	0	95 966	0	0	0	
0,193		0,249		0,305	0,344	0,04	0,022					
0,000772	0	0,000498	0	0,0002135	0	0,0056	0	0	0	0	0	
143,05	143,05	115,23	115,23	96,47	461,38	296,82	259,81	188,91	296,82	259,29	129,78	
2,067	2,067	2,487		2,970		0,972	1,105	1,528				
2,534	2,534	3,05		3,642	1	1,192	1,355	1,874	0,00	0,00	0,00	
	289,55				142,59	15,53	17,22	64,43	17,22		144,8	
	0,0806				0,02111	0,02677	0,02197	0,02963	0,02737		0,03945	
45,762	45,762	44,924							10,094			
10,6387498	5,31937488	6,48262305							0			
49,53	49,53	48,567							10,094			
11,514734	5,7573672	7,0083152							0			
600,00		616,00	626,00	654,80	1000,00			770,00	789,00	1819,00	1460,00	
2,40	0,00	1,23	0,63	0,46	0,00	0,00	0,00	10,01	0,00	0,00	0,00	