Frekvens [Hz]
Starte motor
Temperature
rho
P_atm
Turtall
Moment
DP_P
Q
Efficiency
Amplitude
Time
dP_blende
C
Eps
physical channels
Mean length
input terminal configuration
RSE
RESET Mean
Stop hele programmet
STOP
Lagre
file path (use dialog) 2. Mean
file path Raadata

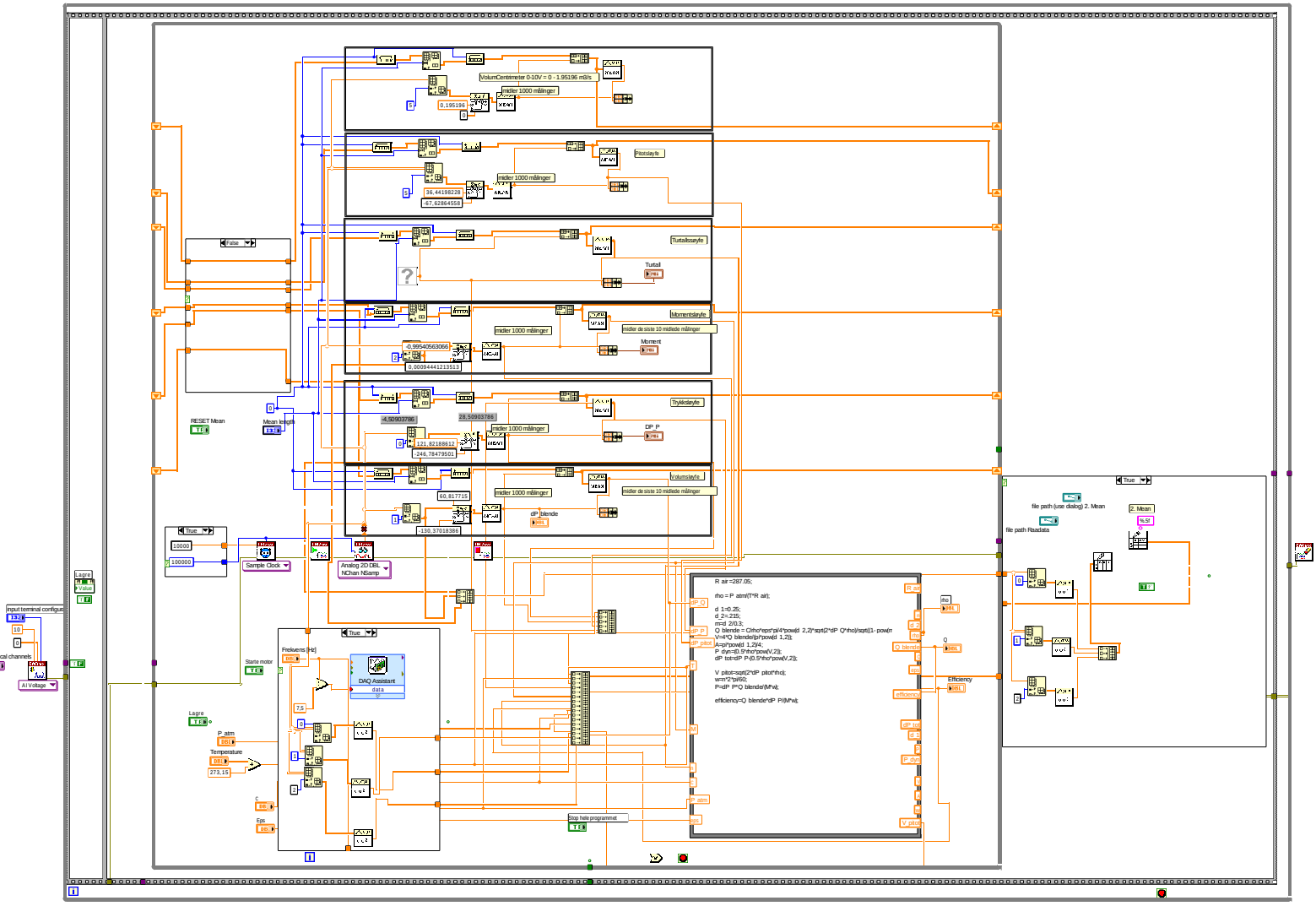
VolumCentimeter 0-10V = 0 - 1.95196 m3/s
midler 1000 målinger
Pitotslayfe
Turtallsslayfe
Momentslayfe
midler de siste 10 midlede målinger
Trykkslayfe
Volumslayfe
RESET Mean
Mean length
Sample Clock
Analog 2D DBL NChan NSamp
Frekvens [Hz]
DAQ Assistant
data
Starte motor
Lagre
P_atm
Temperature
Stop hele programmet
R air =287.05;
rho = P_atm/(T*R air);
d_1=0.25;
d_2=.215;
m=d_2/d_1;
Q blende = C/rho*eps*pi/4*powd(2,2)*sqrt(2*dP Q*rho)/sqrt((1- pow(m
V=4*Q blende/p*powd(1,2)/(
A=p*powd(1,2)/4;
P dyn=(0.5*rho*powV,2));
dP tot=dP P-(0.5*rho*powV,2));
V pitot=sqrt(2*dP pitot*rho);
w=v*2*pi/60;
P=dP P*Q blende/(M*w);
efficiency=Q blende*dP P/(M*w);
Efficiency
file path (use dialog) 2. Mean
file path Raadata
P_atm = 101325;