Product manual

Articulated robot

IRB 4600 - 60/2.05
IRB 4600 - 45/2.05
IRB 4600 - 40/2.55
IRB 4600 - 20/2.50
M2004

Product manual

IRB 4600 - 60/2.05

IRB 4600 - 45/2.05

IRB 4600 - 40/2.55

IRB 4600 - 20/2.50

M2004

Document ID: 3HAC033453-001

Revision: A

ABB AB
Robotics Products
721 68 Västerås
Sweden

Manual overview

About this manual

This manual contains instructions for:

- mechanical and electrical installation of the robot
- maintenance of the robot
- mechanical and electrical repair of the robot.

Usage

This manual should be used during:

- installation, from lifting the robot to its work site and securing it to the foundation, to making it ready for operation
- maintenance work
- repair work and calibration.

Who should read this manual?

This manual is intended for:

- installation personnel
- maintenance personnel
- repair personnel.

Prerequisites

A maintenance/repair/installation craftsman working with an ABB Robot must:

- be trained by ABB and have the required knowledge of mechanical and electrical installation/repair/maintenance work.

Organization of chapters

The manual is organized in the following chapters:

Chapter	Contents
Safety	Safety information that must be read through before performing any installation or service work on the robot. Contains general safety aspects as well as more specific information on how to avoid personal injuries and damage to the product.
Installation and commissioning	Required information about lifting and installation of the robot.
Maintenance	Step-by-step procedures that describe how to perform maintenance of the robot. Based on a maintenance schedule that may be used to plan periodical maintenance.
Repair	Step-by-step procedures that describe how to perform repair activities of the robot. Based on available spare parts.
Calibration information	Procedures that do not require specific calibration equipment. General information about calibration.
Decommissioning	Environmental information about the robot and its components.

Continues on next page

Continued

Chapter	Contents
Reference information	Useful information when performing installation, maintenance or repair work. Includes lists of necessary tools, additional documents, safety standards etc.
Spare part / part list	Complete spare part list and complete list of robot components, shown in exploded views.
Exploded views	Detailed illustrations of the robot with reference numbers to the part list.
Circuit diagram	Circuit diagram for the robot.

References

Reference	Document Id
Product specification - IRB 4600	3HAC032885-001
Product manual - Controller IRC 5	3HAC021313-001
Operating manual - IRC5 with Flexpendant	3HAC16590-1
Operating manual - Calibration pendulum	3HAC16578-1
Operating manual - Service Information System	3HAC025709-001
Application manual - Additional axes and stand alone controller	3HAC025709-001
Technical reference manual - System parameter	3HAC17076-1
Application manual - Electronic Position Switches	3HAC027709-001

Continues on next page

Revisions

Revision	Description
-	First edition
A	The following updates has been made in this revision: • New **WARNING!** added in *Safety chapter* section *Work inside the robot's working range on page 29*. • New **WARNING!** added in *Safety chapter* section *WARNING - Safety risks during work with gearbox lubricants (oil or grease) on page 40*. • Information about the quality and used threadlength for attachment screws on mounting flange, added in *Installation chapter* section *Fitting equipment on mounting flange - IRB 4600 -60/2.05, -45/2.05, -40/2.55 on page 68* and *Fitting equipment on wrist and mounting flange- IRB 4600 -20/2.50 on page 69*. • The text in the introduction to chapters *Installation*, *Maintenance* and *Repair* has been updated concerning the robot being connected to earth when power connected. • Levelmeter calibration added in sections *Calibration methods on page 263* and *Calibration equipment, Levelmeter (alternative method) on page 277*. • Section *Upper arm(2.05/2.50/2.55) on page 286* in Spare parts updated with Type A spare parts. • Section *Lifting and turning a suspended mounted robot on page 56* added in Installation chapter. • Section *Installation of Foundry Plus Cable guard (option no. 908-1) on page 80* added in Installation chapter. • New **DANGER!** added in section *Manually releasing the brakes on page 57*. • Restricting working range with software added in section *Mechanically restricting the working range of axis 1 on page 72*. • The sections describing *Replacing motors* axes 1 through 6 has been updated. Two new sections *Removing motors on page 228* and *Refitting motors on page 236*. replaces the older ones.

Product documentation, M2004

Categories for robot documentation

The robot documentation is divided into a number of categories. This listing is based on the type of information in the documents, regardless of whether the products are standard or optional.

All documents listed can be ordered from ABB on a DVD. The documents listed are valid for M2004 robot systems.

Product manuals

All hardware, robots and controllers will be delivered with a **Product manual** that contains:

- Safety information.
- Installation and commissioning (descriptions of mechanical installation, electrical connections).
- Maintenance (descriptions of all required preventive maintenance procedures including intervals).
- Repair (descriptions of all recommended repair procedures including spare parts).
- Additional procedures, if any (calibration, decommissioning).
- Reference information (article numbers for documentation referred to in Product manual, procedures, lists of tools, safety standards).
- Parts list.
- Foldouts or exploded views.
- Circuit diagrams.

Technical reference manuals

The technical reference manuals describe the robot software in general and contain relevant reference information.

- **RAPID Overview**: An overview of the RAPID programming language.
- **RAPID Instructions, Functions and Data types**: Description and syntax for all RAPID instructions, functions, and data types.
- **RAPID Kernel**: A formal description of the RAPID programming language.
- **System parameters**: Description of system parameters and configuration workflows.

Application manuals

Specific applications (for example software or hardware options) are described in **Application manuals**. An application manual can describe one or several applications.

An application manual generally contains information about:

- The purpose of the application (what it does and when it is useful).
- What is included (for example cables, I/O boards, RAPID instructions, system parameters, CD with PC software).
- How to use the application.
- Examples of how to use the application.

Continues on next page

Operating manuals

The operating manuals describe hands-on handling of the products. The manuals are aimed at those having first-hand operational contact with the product, that is production cell operators, programmers, and trouble shooters.

The group of manuals includes:

- **Emergency safety information**
- **General safety information**
- **Getting started, IRC5 and RobotStudio**
- **IRC5 with FlexPendant**
- **RobotStudio**
- **Introduction to RAPID**
- **Trouble shooting**, for the controller and robot.

How to read the product manual

Reading the procedures

The procedures contain references to figures, tools, material, etc. The references are read as described below.

References to figures

The procedures often include references to components or attachment points located on the robot/controller. The components or attachment points are marked with *italic text* in the procedures and completed with a reference to the figure where the current component or attachment point is shown.

The denomination in the procedure for the component or attachment point corresponds to the denomination in the referenced figure.

The table below shows an example of a reference to a figure from a step in a procedure.

	Action	Note/Illustration
8.	Remove the *rear attachment screws, gearbox.*	Shown in the figure *Location of gearbox on page xx*.

References to required equipment

The procedures often include references to equipment (spare parts, tools, etc.) required for the different actions in the procedure. The equipment is marked with *italic text* in the procedures and completed with a reference to the section where the equipment is listed with further information, that is article number and dimensions.

The denomination in the procedure for the component or attachment point corresponds to the denomination in the referenced list.

The table below shows an example of a reference to a list of required equipment from a step in a procedure.

	Action	Note/Illustration
3.	Fit a new *sealing, axis 2* to the gearbox.	Art. no. is specified in *Required equipment on page xx*.

Safety information

The manual includes a separate safety chapter that must be read through before proceeding with any service or installation procedures. All procedures also include specific safety information when dangerous steps are to be performed.

Read more in the chapter *Safety on page 13*.

1 Safety

1.1. Introduction

Overview

The safety information in this manual is divided into two categories:

- general safety aspects, important to attend to before performing any service work on the robot. These are applicable for all service work and are found in *General safety information on page 14*.
- specific safety information, pointed out in the procedure at the moment of the danger. How to avoid and eliminate the danger is either detailed directly in the procedure, or further detailed in separate instructions, found in *Safety related instructions on page 34*.

1.2 General safety information

1.2.1. Safety in the robot system

Validity and responsibility

The information does not cover how to design, install and operate a complete system, nor does it cover all peripheral equipment that can influence the safety of the total system. To protect personnel, the complete system must be designed and installed in accordance with the safety requirements set forth in the standards and regulations of the country where the robot is installed.

The users of ABB industrial robots are responsible for ensuring that the applicable safety laws and regulations in the country concerned are observed and that the safety devices necessary to protect people working with the robot system are designed and installed correctly. Personnel working with robots must be familiar with the operation and handling of the industrial robot as described in the applicable documents, for example:

- *Operating Manual - IRC5 with FlexPendant* (M2004)
- *Product Manual*

Connection of external safety devices

Apart from the built-in safety functions, the robot is also supplied with an interface for the connection of external safety devices. Via this interface, an external safety function can interact with other machines and peripheral equipment. This means that control signals can act on safety signals received from the peripheral equipment as well as from the robot.

Limitation of liability

Any information given in this manual regarding safety must not be construed as a warranty by ABB that the industrial robot will not cause injury or damage even if all safety instructions are complied with.

Related information

Type of information	Detailed in document	Section
Installation of safety devices	Product manual for the robot	Installation and commissioning
Changing operating modes	Operating manual - IRC5 with FlexPendant (RobotWare 5.0)	Operating modes
Restricting the working space	Product manual for the robot	Installation and commissioning

1.2.2. Safety risks

1.2.2.1. Safety risks during installation and service work on robot

Overview

This section includes information on general safety risks to be considered when performing installation and service work on the robot.

General risks during installation and service

- The instructions in the Product manual in the chapter *Installation and Commissioning* must always be followed.
- Emergency stop buttons must be positioned in easily accessible places so that the robot can be stopped quickly.
- Those in charge of operations must make sure that safety instructions are available for the installation in question.
- Those who install the robot must have the appropriate training for the robot system in question and in any safety matters associated with it.

Nation/region specific regulations

To prevent injuries and damage during the installation of the robot system, the regulations applicable in the country concerned and the instructions of ABB Robotics must be complied with.

Non-voltage related risks

- Safety zones, which must be crossed before admittance, must be set up in front of the robot's working space. Light beams or sensitive mats are suitable devices.
- Turntables or the like should be used to keep the operator out of the robot's working space.
- The axes are affected by the force of gravity when the brakes are released. In addition to the risk of being hit by moving robot parts, there is a risk of being crushed by the parallel arm.
- Energy stored in the robot for the purpose of counterbalancing certain axes may be released if the robot, or parts thereof, are dismantled.
- When dismantling/assembling mechanical units, watch out for falling objects.
- Be aware of stored heat energy in the controller.
- Never use the robot as a ladder, that is, do not climb on the robot motors or other parts during service work. There is a serious risk of slipping because of the high temperature of the motors or oil spills that can occur on the robot.

To be observed by the supplier of the complete system

- The supplier of the complete system must ensure that all circuits used in the safety function are interlocked in accordance with the applicable standards for that function.
- The supplier of the complete system must ensure that all circuits used in the emergency stop function are interlocked in a safe manner, in accordance with the applicable standards for the emergency stop function.

Continues on next page

1.2.2.1. Safety risks during installation and service work on robot

Continued

Complete robot

Safety risk	Description
Hot components!	**CAUTION!** Motors and gears are HOT after running the robot! Touching motors and gears may result in burns! With a higher environment temperature, more surfaces on the robot will get HOT and may also result in burns.
Removed parts may result in collapse of robot!	**WARNING!** Take any necessary measures to ensure that the robot does not collapse as parts are removed, e.g. secure the lower arm with fixtures if removing motor, axis 2.

Cabling

Safety risk	Description
Cable packs are sensitive to mechanical damage!	**CAUTION!** The cable packs are sensitive to mechanical damage! They must be handled with care, especially the connectors, in order to avoid damaging them!

Gearboxes and motors

Safety risk	Description
Gears may be damaged if excessive force is used!	**CAUTION!** Whenever parting/mating motor and gearbox, the gears may be damaged if excessive force is used!

1.2.2.2. CAUTION - Hot parts may cause burns!

Description

During normal operation, many robot parts will become hot, especially the drive motors and gears. Sometimes areas around these parts also become hot. Touching these may cause burns of various severity.

Because of a higher environment temperature, more surfaces on the robot get hot and may result in burns.

Elimination

The instructions below detail how to avoid the dangers specified above:

	Action	Info
1.	Always use your hand, at some distance, to feel if heat is radiating from the potentially hot component before actually touching it.	
2.	Wait until the potentially hot component has cooled if it is to be removed or handled in any other way.	

1.2.2.3. Safety risks related to tools/workpieces

Safe handling

It must be possible to safely turn off tools, such as milling cutters, etc. Make sure that guards remain closed until the cutters stop rotating.

It should be possible to release parts by manual operation (valves).

Safe design

Grippers/end effectors must be designed so that they retain workpieces in the event of a power failure or a disturbance to the controller.

CAUTION!

Ensure that a gripper is prevented from dropping a workpiece, if such is used.

1.2.2.4. Safety risks related to pneumatic/hydraulic systems

General

Special safety regulations apply to pneumatic and hydraulic systems.

Residual energy

- Residual energy may be present in these systems. After shutdown, particular care must be taken.
- The pressure in pneumatic and hydraulic systems must be released before starting to repair them.

Safe design

- Gravity may cause any parts or objects held by these systems to drop.
- Dump valves should be used in case of emergency.
- Shot bolts should be used to prevent tools, etc., from falling due to gravity.

1.2.2.5. Safety risks with pressure relief valve

Introduction

The pressure relief valve must be kept clean and open, for it to be able to function properly.

Safety risks

The pressure relief valve is a vital part preventing too much air pressure being built up inside the robot. If too much air pressure has been built up, there is a risk of personal injury and mechanical damage.

1.2.2.6. Safety risks during operational disturbances

General

- The industrial robot is a flexible tool that can be used in many different industrial applications.
- All work must be carried out professionally and in accordance with the applicable safety regulations.
- Care must be taken at all times.

Qualified personnel

- Corrective maintenance must only be carried out by qualified personnel who are familiar with the entire installation as well as the special risks associated with its different parts.

Extraordinary risks

If the working process is interrupted, extra care must be taken due to risks other than those associated with regular operation. Such an interruption may have to be rectified manually.

1.2.2.7. Risks associated with live electric parts

Voltage related risks, general

- Although troubleshooting may, on occasion, need to be carried out while the power supply is turned on, the robot must be turned off (by setting the mains switch to OFF) when repairing faults, disconnecting electric leads and disconnecting or connecting units.
- The mains supply to the robot must be connected in such a way that it can be turned off from outside the robot's working space.

Voltage related risks, IRC5 controller

A danger of high voltage is associated with, for example, the following parts:

- Be aware of stored electrical energy (DC link, Ultracapacitor bank unit) in the controller.
- Units such as I/O modules, can be supplied with power from an external source.
- The mains supply/mains switch
- The transformers
- The power unit
- The control power supply (230 VAC)
- The rectifier unit (400-480 VAC and 700 VDC. Note: Capacitors!)
- The drive unit (700 VDC)
- The drive system power supply (230 VAC)
- The service outlets (115/230 VAC)
- The customer power supply (230 VAC)
- The power supply unit for additional tools, or special power supply units for the machining process.
- The external voltage connected to the controller remains live even when the robot is disconnected from the mains.
- Additional connections.

Voltage related risks, robot

A danger of high voltage is associated with the robot in:

- The power supply for the motors (up to 800 VDC).
- The user connections for tools or other parts of the installation (max. 230 VAC, see chapter Installation and commissioning in the Product manual).

Voltage related risks, tools, material handling devices, etc.

Tools, material handling devices, etc., may be live even if the robot system is in the OFF position. Power supply cables which are in motion during the working process may be damaged.

1.2.3. Safety actions

1.2.3.1. Safety fence dimensions

General

Install a safety cell around the robot to ensure safe robot installation and operation.

Dimensioning

Dimension the fence or enclosure to enable it to withstand the force created if the load being handled by the robot is dropped or released at maximum speed. Determine the maximum speed from the maximum velocities of the robot axes and from the position at which the robot is working in the work cell (see *Product Specification - Description, Robot Motion*).

Also consider the maximum possible impact caused by a breaking or malfunctioning rotating tool or other device fitted to the robot.

1.2.3.2. Fire extinguishing

NOTE!

Use a CARBON DIOXIDE (CO_2) extinguisher in the event of a fire in the robot system (robot or controller)!

1.2.3.3. Emergency release of the robot’s arm

Description

In an emergency situation, any of the robot's axes may be released manually by pushing the brake release buttons on the robot.

How to release the brakes is detailed in section:

- *Manually releasing the brakes on page 57*.

The robot arm may be moved manually on smaller robot models, but larger models may require using an overhead crane or similar.

Increased injury

Before releasing the brakes, make sure that the weight of the arms does not increase the pressure on the trapped person, further increasing any injury!

1.2.3.4. Brake testing

When to test

During operation the holding brake of each axis motor wears normally. A test may be performed to determine whether the brake can still perform its function.

How to test

The function of the holding brake of each axis motor may be checked as detailed below:

1. Run each robot axis to a position where the combined weight of the robot arm and any load is maximized (max. static load).
2. Switch the motor to the MOTORS OFF position with the Operating mode selector on the controller.
3. Check that the axis maintains its position.

   If the robot does not change position as the motors are switched off, then the brake function is adequate.

1.2.3.5. Risk of disabling function "Reduced speed 250 mm/s"

NOTE!

Do not change *Transm gear ratio* or other kinematic system parameters from the FlexPendant or a PC. This will affect the safety function "Reduced speed 250 mm/s".

1.2.3.6. Safe use of the FlexPendant

NOTE!

The enabling device is a push-button located on the side of the FlexPendant which, when pressed halfway in, takes the system to MOTORS ON. When the enabling device is released or pushed all the way in, the robot is taken to the MOTORS OFF state.

To ensure safe use of the FlexPendant, the following must be implemented:

- The enabling device must never be rendered inoperative in any way.
- During programming and testing, the enabling device must be released as soon as there is no need for the robot to move.
- The programmer must always bring the FlexPendant with him/her, when entering the robot's working space. This is to prevent anyone else taking control of the robot without the programmer knowing.

Enabling device

The enabling device is a manually operated constant pressure push-button which, when continuously activated in one position only, allows potentially hazardous functions but does not initiate them. In any other position, hazardous functions are stopped safely.

The enabling device is of a specific type where you must press the push-button only half-way to activate it. In the fully in and fully out positions, robot operation is impossible.

Hold-to-run function

The hold-to-run function allows movement when a button connected to the function is actuated manually and immediately stops any movement when released. The hold-to-run function can only be used in manual mode.

How to operate the hold-to-run function is detailed in *Operating manual - IRC5 with FlexPendant*.

1.2.3.7. Work inside the robot's working range

WARNING!

If work must be carried out within the robot’s work envelope, the following points must be observed:

- The operating mode selector on the controller must be in the manual mode position to render the enabling device operative and to block operation from a computer link or remote control panel.
- The robot’s speed is limited to max. 250 mm/s when the operating mode selector is in position "manual mode with reduced speed". This should be the normal position when entering the working space. The position "manual mode with full speed (100%)" may only be used by trained personnel who are aware of the risks that this entails.
- Pay attention to the rotating axes of the robot! Keep a distance to the axes in order not to get entangled with hair or clothing. Also be aware of any danger that may be caused by rotating tools or other devices mounted on the robot or inside the cell.
- Test the motor brake on each axis, according to section *Brake testing on page 26*.

WARNING!

NEVER, under no circumstance, stay beneath any of the robot’s axes! There is always a risk that the robot will move unexpectedly when robot axes are moved using the enabling device or during other work inside the robot’s working range.

1.2.3.8. Signal lamp (optional)

Description

A signal lamp with a yellow fixed light can be mounted on the robot, as a safety device.

Function

The lamp is active in MOTORS ON mode.

Further information

Further information about the MOTORS ON/MOTORS OFF mode may be found in the controller documentation.

1.2.3.9. Translate the information on safety and information labels

Labels on the product

Both the robot and the controller are marked with several safety and information labels, containing important information about the product. The information is useful for all personnel handling the robot system, for example during installation, service or operation.

Translation possibilities

The labels fitted to the product contain space for adding a fourth language underneath the three standard languages (English, German and French).

Add a local language to the label by:

- Using a transparent sticker over the standard label with text added in a fourth language. Drawings detailing the design (text, figure, dimensions) of the standard labels can be ordered from ABB. Notice that each label is identified according to the article number located in the lower corner of the label.

Example of transparent sticker

The figure below shows the location of the free space on one of the labels on the robot, where the fourth language can be added. The figure also shows a transparent sticker, containing the text in Swedish.

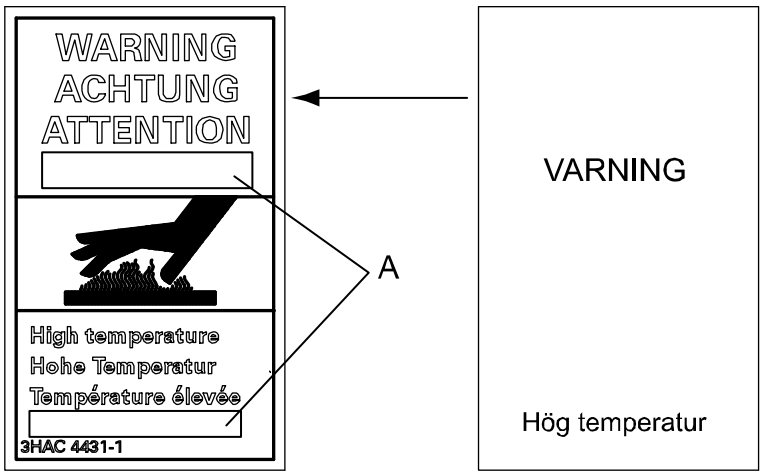

xx0500002517

A	Free space for adding a fourth language

1.2.4. Safety stops

1.2.4.1. What is an emergency stop?

Definition of emergency stop

An emergency stop is a state that overrides any other robot control, disconnects drive power from the robot motors, stops all moving parts, and disconnects power from any potentially dangerous functions controlled by the robot system.

An emergency stop state means that all power is disconnected from the robot except for the manual brake release circuits. You must perform a recovery procedure, i.e, resetting the emergency stop button and pressing the Motors On button, in order to return to normal operation.

The robot system can be configured so that the emergency stop results in either:

- An uncontrolled stop, immediately stopping the robot actions by disconnecting power from the motors.
- A controlled stop, stopping the robot actions with power available to the motors so that the robot path can be maintained. When completed, power is disconnected.

The default setting is uncontrolled stop. However, controlled stops are preferred since they minimize extra, unnecessary wear on the robot and the actions needed to return the robot system back to production. Please consult your plant or cell documentation to see how your robot system is configured.

NOTE!

The emergency stop function may only be used for the purpose and under the conditions for which it is intended.

NOTE!

The emergency stop function is intended for immediately stopping equipment in the event of an emergency.

NOTE!

Emergency stop should not be used for normal program stops as this causes extra, unnecessary wear on the robot. For how to perform normal program stops, see section *Stopping programs* in *Operating manual - IRC5 with FlexPendant*.

Classification of stops

The safety standards that regulate automation and robot equipment define categories in which each type of stop applies:

If the stop is...	... then it is classified as...
uncontrolled	category 0 (zero)
controlled	category 1

Continues on next page

Emergency stop devices

In a robot system there are several emergency stop devices that can be operated in order to achieve an emergency stop. There are emergency stop buttons available on the FlexPendant and on the controller cabinet (on the Control Module on a Dual Cabinet Controller). There can also be other types of emergency stops on your robot, consult your plant or cell documentation to see how your robot system is configured.

1.3 Safety related instructions

1.3.1. Safety signals, general

General

This section specifies all dangers that may arise from performing the work detailed in this manual. Each danger is detailed in its own section consisting of:

- A caption specifying the danger level (DANGER, WARNING or CAUTION) and the type of danger.
- A brief description of what will happen if the operator/service personnel **do not** eliminate the danger.
- An instruction on how to eliminate the danger to facilitate performing the activity at hand.

Danger levels

The table below defines the captions specifying the danger levels used throughout this manual.

Symbol	Designation	Signification
 danger	DANGER	Warns that an accident *will* occur if the instructions are not followed, resulting in a serious or fatal injury and/or severe damage to the product. It applies to warnings that apply to danger with, for example, contact with high voltage electrical units, explosion or fire risk, risk of poisonous gases, risk of crushing, impact, fall from height etc.
 warning	WARNING	Warns that an accident *may* occur if the instructions are not followed, that can lead to serious injury, possibly fatal, and/or great damage to the product. It applies to warnings that apply to danger with, for example, contact with high voltage electrical units, explosion or fire risk, risk of poisonous gases, risk of crushing, impact, fall from height etc.
 Electrical shock	ELECTRICAL SHOCK	The electrocution or electrical shock symbol indicates electrical hazards which could result in severe personal injury or death.
 caution	CAUTION	Warns that an accident may occur if the instructions are not followed, that can result in injury and/or damage to the product. It also applies to warnings of risks that include burns, eye injury, skin injury, hearing damage, crushing or slipping, tripping, impact, fall from height etc. Furthermore, it applies to warnings that include function requirements when fitting and removing equipment, where there is a risk of damaging the product or causing a breakdown.

Continues on next page

Continued

Symbol	Designation	Signification
 Electrostatic discharge (ESD)	ELECTROSTATIC DISCHARGE (ESD)	The electrostatic discharge (ESD) symbol indicates electrostatic hazards which could result in severe damage to the product.
 Note	NOTE	Note symbols alert you to important facts and conditions.
 Tip	TIP	Tip symbols direct you to specific instructions, where to find additional information or how to perform a certain operation in an easier way.

1.3.2. DANGER - Moving robots are potentially lethal!

Description

Any moving robot is a potentially lethal machine.

When running the robot, it may perform unexpected and sometimes irrational movements. Moreover, all movements are performed with great force and may seriously injure any personnel and/or damage any piece of equipment located within the working range of the robot.

Elimination

	Action	Note
1.	Before attempting to run the robot, make sure all *emergency stop equipment* is correctly installed and connected.	Emergency stop equipment such as gates, tread mats, light curtains, etc.
2.	Usually the hold-to-run function is active only in manual full speed mode. To increase safety it is also possible to activate hold-to-run for manual reduced speed with a system parameter. The hold-to-run function is used in manual mode, not in automatic mode.	How to use the hold-to-run function in RobotWare 5 is detailed in section *How to use the hold-to-run function* in the *Operating manual - IRC5 with Flex-Pendant*.
3.	Make sure no personnel are present within the working range of the robot before pressing the start button.	

1.3.3. DANGER - First test run may cause injury or damage!

Description

Since performing a service activity often requires disassembly of the robot there are several safety risks to take into consideration before the first test run.

Elimination

Follow the procedure below when performing the first test run after a service activity - repair, installation or maintenance:

	Action
1.	Remove all service tools and foreign objects from the robot and its working area!
2.	Install all safety equipment properly!
3.	Make sure all personnel are standing at a safe distance from the robot, that is out of its reach behind safety fences, etc!
4.	Pay special attention to the function of the part previously serviced!

Collision risks

CAUTION!

When programming the movements of the robot always check potential collision risks before the first test run!Mechanical stops will not always stop the movements of the robot completely!

1.3.4. WARNING - The brake release buttons may be jammed after service work

Description

The brake release unit has push-buttons for the brake release of each axis motor. When service work is performed inside the SMB recess that includes removal and refitting of the brake release unit, the brake release buttons may be jammed after refitting.

DANGER!

If the power is turned on while a brake release button is jammed in depressed position, the affected motor brake is released! This may cause serious personal injuries and damage to the robot.

Elimination

To eliminate the danger after service work has been performed inside the SMB recess, follow the procedure below.

	Action
1.	Make sure the power is turned off.
2.	Remove the push-button guard, if necessary.
3.	Check the push-buttons of the brake release unit by pressing them down, one by one. Make sure none of the buttons are jammed in the tube.
4.	If a button gets jammed in the depressed position, the alignment of the brake release unit must be adjusted so that the buttons can move freely in their tubes!

1.3.5. WARNING - The unit is sensitive to ESD!

Description

ESD (electrostatic discharge) is the transfer of electrical static charge between two bodies at different potentials, either through direct contact or through an induced electrical field. When handling parts or their containers, personnel not grounded may potentially transfer high static charges. This discharge may destroy sensitive electronics.

Elimination

	Action	Note
1.	Use a wrist strap	Wrist straps must be tested frequently to ensure that they are not damaged and are operating correctly.
2.	Use an ESD protective floor mat.	The mat must be grounded through a current-limiting resistor.
3.	Use a dissipative table mat.	The mat should provide a controlled discharge of static voltages and must be grounded.

Location of wrist strap button

The wrist strap button is located in the right corner as shown in the illustration below.

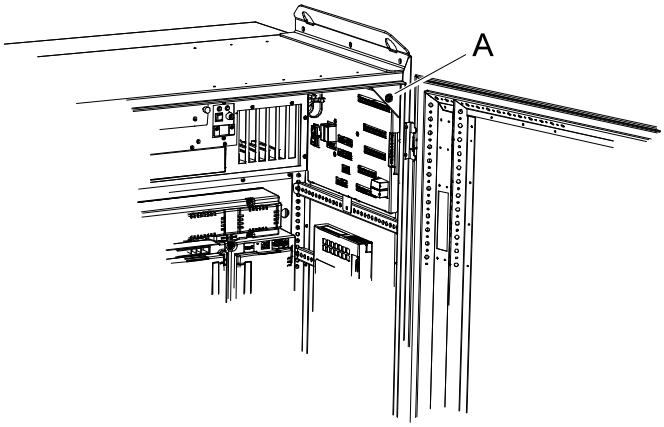

xx0500002171

A	Wrist strap button

1.3.6. WARNING - Safety risks during work with gearbox lubricants (oil or grease)

Description

When handling the gearbox lubricants, there is a risk of both personal injury and product damage occurring! Following safety information must be regarded before performing any work with lubricants in the gearboxes!

Warnings and elimination

Warning	Description	Elimination/Action
 - **Hot oil or grease!**	Changing and draining gearbox oil or grease may require handling hot lubricant of up to 90 °C!	Make sure that protective gear like goggles and gloves are always worn during this activity.
 . **Allergic reaction**	When working with gearbox lubricant there is a risk of an allergic reaction!	Make sure that protective gear like goggles and gloves are always worn.
 - **Possible pressure build up in gearbox!**	When opening the oil or grease plug, there may be pressure present in the gearbox, causing lubricant to spray from the opening!	Open the plug carefully and keep away from the opening. Do not overfill the gearbox when filling.
 - **Do not overfill!**	Overfilling of gearbox lubricant can lead to internal over-pressure inside the gearbox which in turn may: • damage seals and gaskets • completely press out seals and gaskets • prevent the robot from moving freely.	Make sure not to overfill the gearbox when filling with oil or grease! After filling, check the correct level.
 - **Do not mix types of oil!**	Mixing types of oil may cause severe damage to the gearbox!	When filling gearbox oil, do not mix different types of oil unless specified in the instruction. Always use the type of oil specified by the manufacturer!
 - **Heat up the oil!**	Warm oil drains quicker than cold oil.	When changing gearbox oil, first run the robot for a time to heat up the oil.

Continues on next page

Continued

Warning	Description	Elimination/Action
- **Specified amount depends on drained volume!**	The specified amount of oil or grease is based on the total volume of the gearbox. When changing the lubricant, the amount refilled may differ from the specified amount, depending on how much has previously been drained from the gearbox.	After refilling, check the lubricant level.

1.3.6. WARNING - Safety risks during work with gearbox lubricants (oil or grease)

2 Installation and commissioning

2.1. Introduction

General

This chapter contains information for installing the robot at the working site.

More detailed technical data can be found in the *Product specification* for the robot, such as:

- load diagram
- permitted extra loads (equipment)
- location of extra loads (equipment).

Safety information

Before any installation work is commenced, it is extremely important that all safety information is observed!

There are general safety aspects that must be read through, as well as more specific safety information that describes the danger and safety risks when performing the procedures. Read the chapter *Safety on page 13* before performing any installation work.

NOTE!

If the robot is connected to power, always make sure that the robot is connected to *earth* before starting any installation work!

For more information see:

- Product manual - IRC5

2.2 Unpacking

2.2.1. Pre-installation procedure

Introduction

This section is intended for use when unpacking and installing the robot for the first time. It also contains information useful during later re-installation of the robot.

Checking the pre-requisites for installation

Installation craftsmen working with an ABB robot must:

- be trained by ABB and have the required knowledge of mechanical and electrical installation/maintenance/repair work
- conform to all national and local codes.

The checklist details what must be observed before proceeding with the actual installation of the robot:

	Action
1.	Visually inspect the robot to make sure it is not damaged.
2.	Make sure the lifting device used is suitable to handle the weight of the robot as specified in *Weight, robot on page 44*.
3.	If the robot is not installed directly, it must be stored as described in *Storage conditions, robot on page 47*.
4.	Make sure the expected operating environment of the robot conforms to the specifications as described in *Operating conditions, robot on page 47*.
5.	Before taking the robot to its installation site, make sure the site conforms to *Loads on foundation, robot on page 45*, *Requirements, foundation on page 46* and *Protection classes, robot on page 47*.
6.	Before moving the robot, please observe *Risk of tipping/stability on page 52* regarding risk of tipping!
7.	When these prerequisites are met, the robot may be taken to its installation site as described in section: *On-site installation*.

Weight, robot

The table shows the weights of the different variants of the robot:

Variant	Weight
IRB 4600 - 60/2.05	425 kg
IRB 4600 - 45/2.05	425 kg
IRB 4600 - 40/2.55	435 kg
IRB 4600 - 20/2.50	418 kg

NOTE!

The weight does not include tools and other equipment fitted on the robot!

Continues on next page

Loads on foundation, robot

The table shows the various forces and torques working on the robot during different kinds of operation.

The rigidity of the foundation must be designed to minimize the affects of dynamic behavior on the robot. For optimal perfomance, the frequency for the foundation bearing the robot must be higher than 22 Hz.

TuneServo can be used to adapt robot tuning for a non-optimal foundation.

Fxy and Mxy are vectors that can have any direction on the xy plane.

The illustrations show the directions of the stress forces.

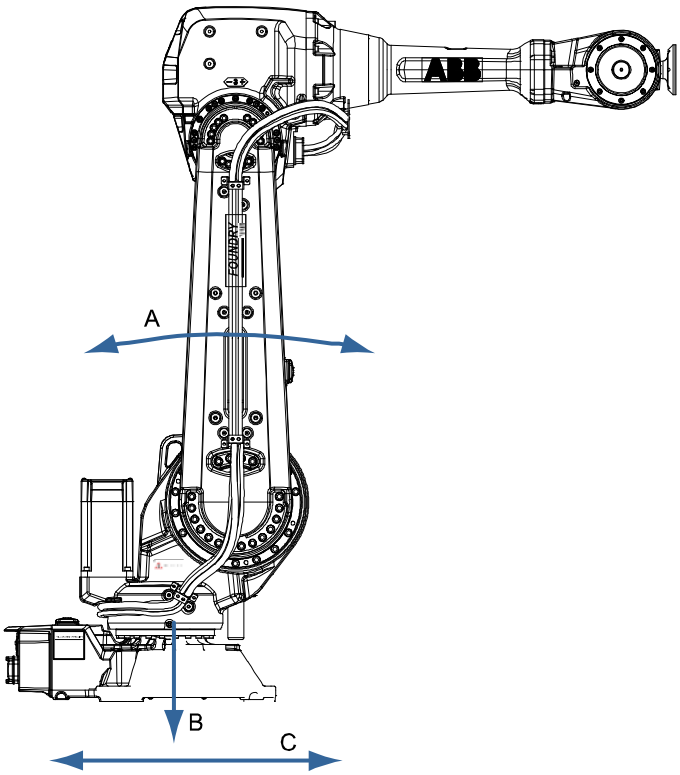

xx0900000056

A	Torque $_{xy}$ (M_{xy})
B	Force $_{z}$ (F_{z})
C	Force $_{xy}$ (F_{xy})

Continues on next page

Continued

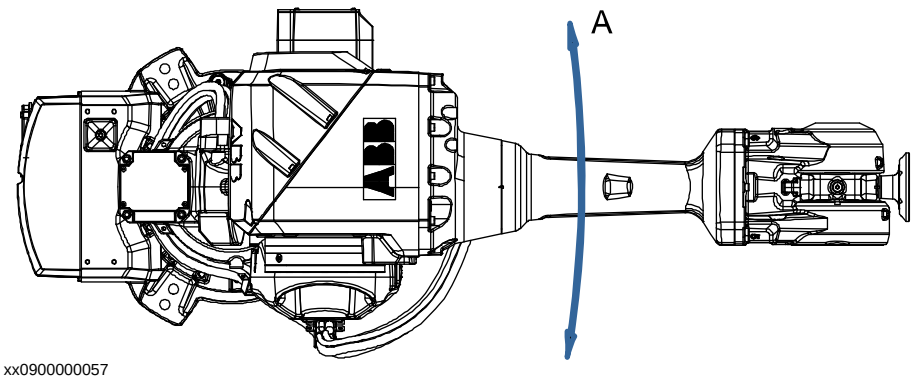

xx0900000057

A	Torque $_z$ (M_z)

Force	Mounting position	Endurance load (in operation)	Max. load (emergency stop)
Force xy	Floor Suspended	±3950N ±3950N	±7800 N ±7800 N
Force z	Floor Suspended	4350 ±1700N -4350 ±1700N	4350 ±5500 N -4350 ±5500 N
Torque xy	Floor Suspended	±6350 Nm ±6350 Nm	±13000 Nm ±13000 Nm
Torque z	Floor Suspended	±1650 Nm ±1650 Nm	±3000 Nm ±3000 Nm

NOTE!

These forces and torques are extreme values that are rarely encountered during operation. Also, the values never reach their maximum at the same time.

Note regarding M_{xy} and F_{xy}

The bending torque (M_{xy}) can occur in any direction in thr XY-plane of the base coordinate system.

The same applies to the tranverse force (F_{xy}).

Requirements, foundation

The table shows the requirements for the foundation where the weight of the installed robot is included:

Requirements	Value	Note
Min. levelity	0.5 mm	
Max. tilt	15°	The limit for the maximum load on the robot is reduced if the robot is tilted. Contact ABB for further information about acceptable loads.
Min. resonance frequency	22 Hz	

Continues on next page

Storage conditions, robot

The table shows the allowed storage conditions for the robot:

Parameter	Value
Min. ambient temperature	-25°
Max. ambient temperature	+55°
Max. ambient temperature (less than 24 hrs)	+70°
Max. ambient humidity	95% at constant temperature

Operating conditions, robot

The table shows the allowed operating conditions for the robot:

Parameter	Value
Min. ambient temperature	+5°C
Max. ambient temperature	+45°C
Max. ambient humidity	95% at constant temperature

Protection classes, robot

The table shows the protection class of the robot:

Robot version	Protection class
Standard	IP 67
Foundry	IP 67
Cooling fan (option)	IP 54

2.2.2. Working range and type of motion

Working range

The figures show the working ranges of the robot variants mounted in different ways.

The extreme positions of the robot arm are specified at the wrist center (dimensions in mm).

Working range, floor mounted

The illustration shows the unrestricted working range when the robot is floor mounted.

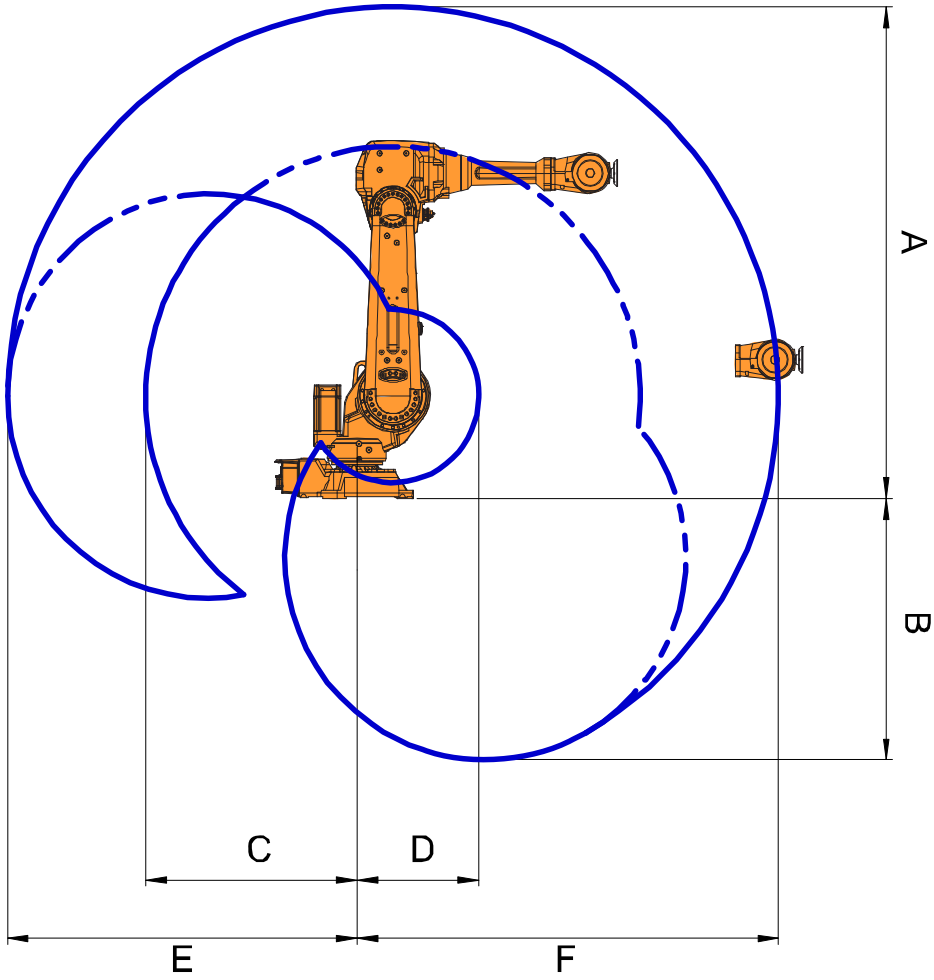

xx0800000267

Variant	Pos. A	Pos. B	Pos. C	Pos. D	Pos. E	Pos. F
IRB 4600 - 60/2.05	2371 mm	1260 mm	1028 mm	593 mm	1701 mm	2051 mm
IRB 4600 - 45/2.05	2371 mm	1260 mm	1028 mm	593 mm	1701 mm	2051 mm
IRB 4600 - 40/2.55	2872 mm	1735 mm	1393 mm	680 mm	2202 mm	2552 mm
IRB 4600 - 20/2.50	2833 mm	1696 mm	1361 mm	665 mm	2163 mm	2513 mm

Continues on next page

Working range, suspended mounted

The illustration shows the unrestricted working range when the robot is suspended mounted.

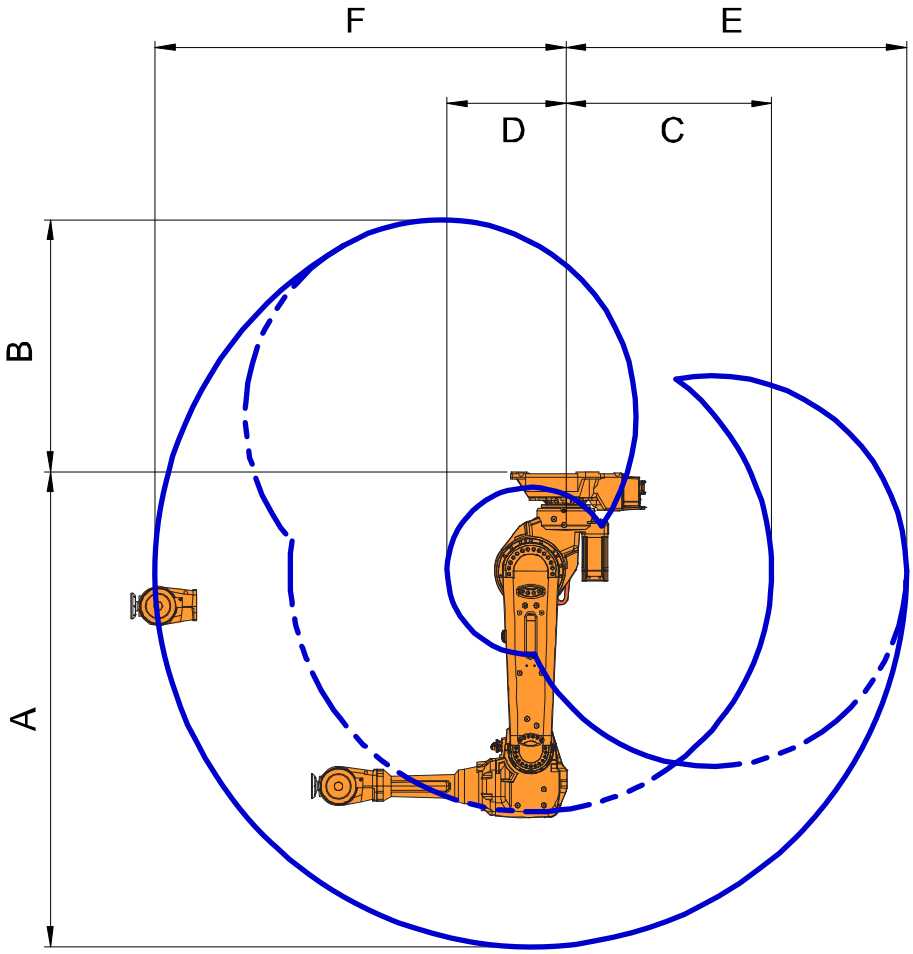

xx0900000055

Variant	Pos. A	Pos. B	Pos. C	Pos. D	Pos. E	Pos. F
IRB 4600 - 60/2.05	2371 mm	1260 mm	1028 mm	593 mm	1701 mm	2051 mm
IRB 4600 - 45/2.05	2371 mm	1260 mm	1028 mm	593 mm	1701 mm	2051 mm
IRB 4600 - 40/2.55	2872 mm	1735 mm	1393 mm	680 mm	2202 mm	2552 mm
IRB 4600 - 20/2.50	2833 mm	1696 mm	1361 mm	665 mm	2163 mm	2513 mm

Continues on next page

Continued

Turning radius

The turning radius of the robot that is floor or suspended mounted is shown in the figure.

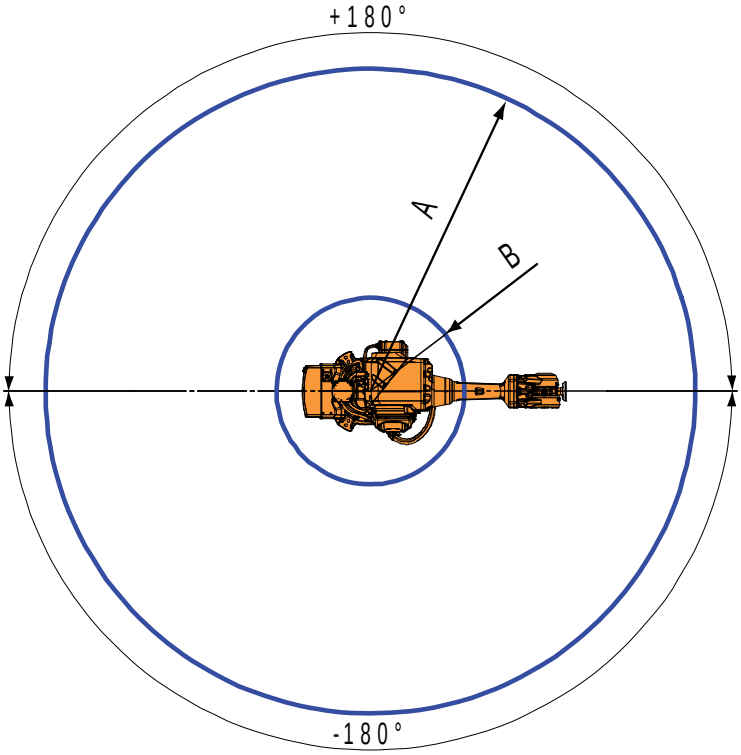

xx0800000268

Variant	Pos. A	Pos. B
IRB 4600 - 60/2.05	R2051	R593
IRB 4600 - 45/2.05	R2051	R593
IRB 4600 - 40/2.55	R2552	R680
IRB 4600 - 20/2.50	R2513	R665

Robot motion, IRB 4600 -60/2.05, -45/2.05, -40/2.55

The table specifies the types and ranges of motion in every axes.

Location of motion	Type of motion	Range of movement
Axis 1	Rotation motion	±180°
Axis 2	Arm motion	+150° / -90°
Axis 3	Arm motion	+75° / -180°
Axis 4	Wrist motion	±400°
Axis 5	Bend motion	+120° / -125°
Axis 6	Turn motion	±400°

Continues on next page

Robot motion, IRB 4600 - 20/2.50

The table specifies the types and ranges of motion in every axes.

Location of motion	Type of motion	Range of movement
Axis 1	Rotation motion	±180°
Axis 2	Arm motion	+150° / -90°
Axis 3	Arm motion	+75° / -180°
Axis 4	Wrist motion	±400°
Axis 5	Bend motion	±120°
Axis 6	Turn motion	±400°

2.2.3. Risk of tipping/stability

Risk of tipping

When the robot is not fastened to the foundation and standing still, the robot is not stable in the whole working area. Moving the arms will displace the center of gravity, which may cause the robot to tip over.

Do not change the robot position before securing it to the foundation!

Most stable position

The figure shows the robot in its shipping position, which also is the most stable position.

The position of the calibration mark in the figure is approximate.

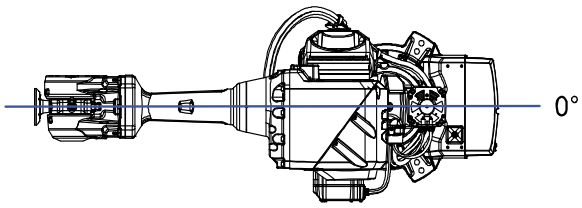

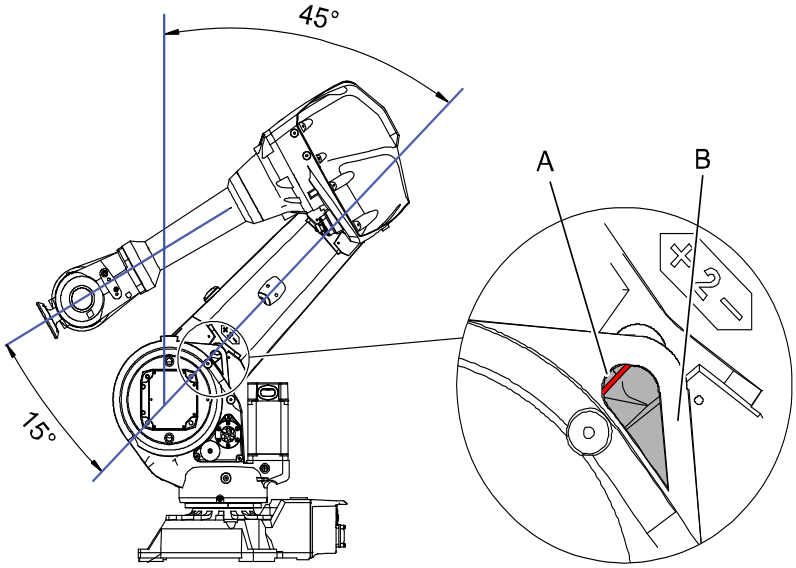

xx0800000263

A	Calibration mark (visible in the hole)
B	Lifting lug

CAUTION!

The robot is likely to be mechanically unstable while not secured to the foundation!

2.3 On-site installation

2.3.1. Lifting robot with roundslings

Introduction

When lifting the robot use roundslings and an overhead crane.

How to lift *suspended mounted robot* is described in the lifting instruction delivered with the turning tool art. no. 3HAC034766-001. See *Lifting and turning a suspended mounted robot on page 56*.

Required equipment

Equipment	Note
Overhead crane	Lifting capacity 1 000 kg (Max load at 90°)
Roundslings (2 pcs)	• Lifting capacity/roundsling: 1 000 kg • Length: 4 m

Lifting

Attach the roundslings as shown in the figure.

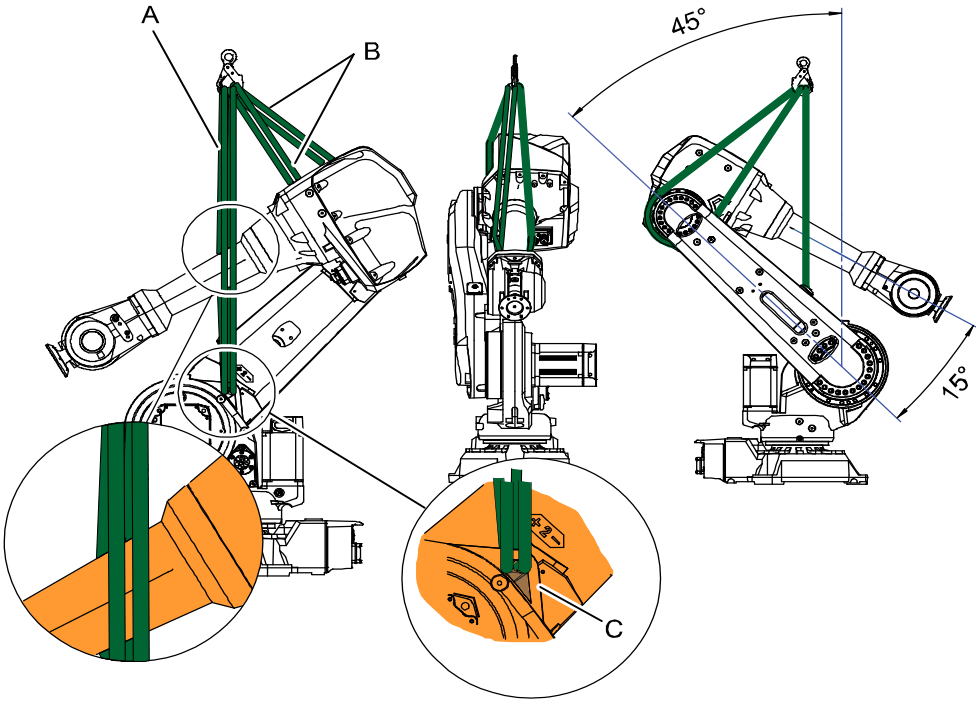

xx0800000262

A	Roundsling put folded in U-shape through the lifting lug
B	Roundsling put folded in U-shape around gearbox axis 3
C	Lifting lug

Continues on next page

Lifting instructions

Use this procedure to lift the robot in a safe way.

	Action	Note
1.	**CAUTION!** The different variants of the robot weighs according to the list. All lifting equipment used must be sized accordingly! • IRB 4600 - 60/2.05: 425 kg • IRB 4600 - 45/2.05: 425 kg • IRB 4600 - 40/2.55: 435 kg • IRB 4600 - 20/2.50: 418 kg	
2.	**CAUTION!** Attempting to lift the robot in any other position than that recommended may result in the robot tipping over and causing severe damage or injury!	
3.	**WARNING!** Personnel must not, under any circumstances, be present under the suspended load!	
4.	Move the robot to its most stable position.	Detailed in section: • *Risk of tipping/stability on page 52*
5.	**DANGER!** Turn off all electric power, hydraulic and pneumatic pressure supplies to the robot!	
6.	Attach *roundsling A* to the lifting lug on the frame, and put folded in a U-shape on either side of the upper arm.	See the figure in: • *Lifting on page 53*
7.	Attach *roundsling B* at gearbox axis 3, and put folded in a U-shape around the gearbox.	See the figure in: • *Lifting on page 53*
8.	Make sure the roundslings do not rub against any sharp edges.	

Continues on next page

	Action	Note
9.	When the robot is lifted the roundslings will adjust themselves. **CAUTION!** When lifting, the robot will tilt slightly backwards! Be careful not to damage the connection box at the base of the robot!	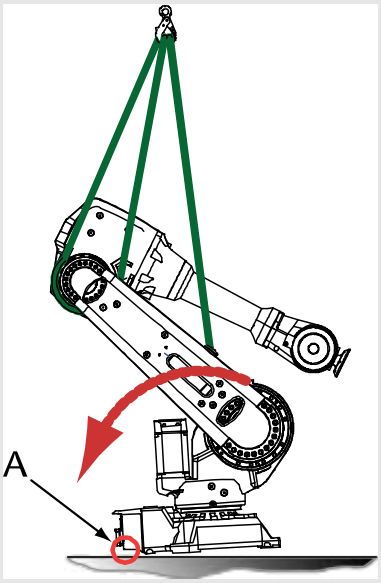 xx0800000291 • A: Area where the connection box can be damaged while lifting.
10.	Lift the robot with an overhead crane.	Lifting capacity: • See *Required equipment on page 53*

2.3.2. Lifting and turning a suspended mounted robot

Introduction

How to lift and turn the robot into a suspended position using turning tool 3HAC034766-001 is described in the lifting instruction art. no. 3HAC034766-003 delivered with the turning tool. *Contact ABB* for more information.

2.3.3. Manually releasing the brakes

General

The section below details how to release the holding brakes of each axis' motor.

This can be done in one of three ways:

- using the push-button when the robot is connected to the controller.
- using the push-button on the robot with an external power supply.
- using an external voltage supply directly on the respective brake.

DANGER!

When releasing the holding brakes with push-buttons, the robot must be properly attached!

DANGER!

When releasing the holding brakes, the robot axes may move very quickly and sometimes in unexpected ways!

Make sure no personnel is near or beneath the robot arm!

Using the push-button when the robot is connected to the controller

The procedure details how to release the holding brakes with push-buttons, when the robot is connected to the controller.

	Action	Note
1.	The internal brake release unit is located at the base of the robot.	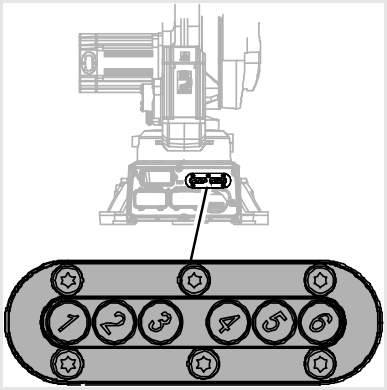 xx0800000272
2.	The brake release unit is equipped with six buttons for controlling the axes brakes. The buttons are numbered according to the numbers of the axes.	
3.	Release the holding brake on a particular axis by pressing the corresponding button on the push-button unit and keeping it depressed.	
4.	The brake will function again as soon as the button is released.	

Continues on next page

Using the push-button on the robot with an external power supply

The procedure below details how to release the holding brakes with the push-buttons, when the robot is **not** connected to the controller.

	Action	Note
1.	Connect an external 24VDC power supply to the connector R1.MP on the robot base. **NOTE!** Be careful not to interchange the 24V and 0V pins! If they are mixed up, damage can be caused to the brake release unit and the system board! **WARNING!** **Incorrect connections can cause all brakes to be released simultaneously!**	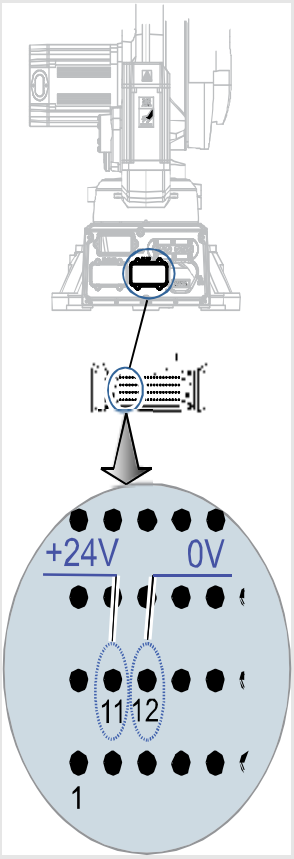 xx0800000269 Connect to connector R1.MP: • 0V to pin 12 • +24V to pin 11
2.	Release the holding brake on a particular axis by pressing the corresponding button on the push-button unit and keeping it depressed.	The brake release unit is equipped with six buttons for controlling the axes brakes. The buttons are numbered according to the numbers of the axes. See the previous figure.
3.	The brake will function again as soon as the button is released.	

Continues on next page

Using an external voltage supply directly on the respective brake

The procedure below details how to release the holding brake of a specific axis by supplying external voltage directly on the brake.

	Action	Note
1.	Every axis has a holding brake built into the axis motor. This holding brake may be released by connecting 24VDC power supply directly to one of the connectors in the motor. Danger! DANGER! **When power is connected directly to the brake cable, the brake will be released immediately when the power is switched on.** **This may cause some unexpected robot movements!**	Make the connection to the current motor according to the Circuit Diagram. See the chapter *Circuit diagram*.

2.3.4. Orienting and securing the robot

Introduction

This section details how to orient and secure the robot to the foundation or base plate in order to run the robot safely. The requirements made on the foundation are shown in sections *Loads on foundation, robot on page 45* and *Requirements, foundation on page 46*.

Hole configuration, base

The illustration shows the hole configuration used when securing the robot.

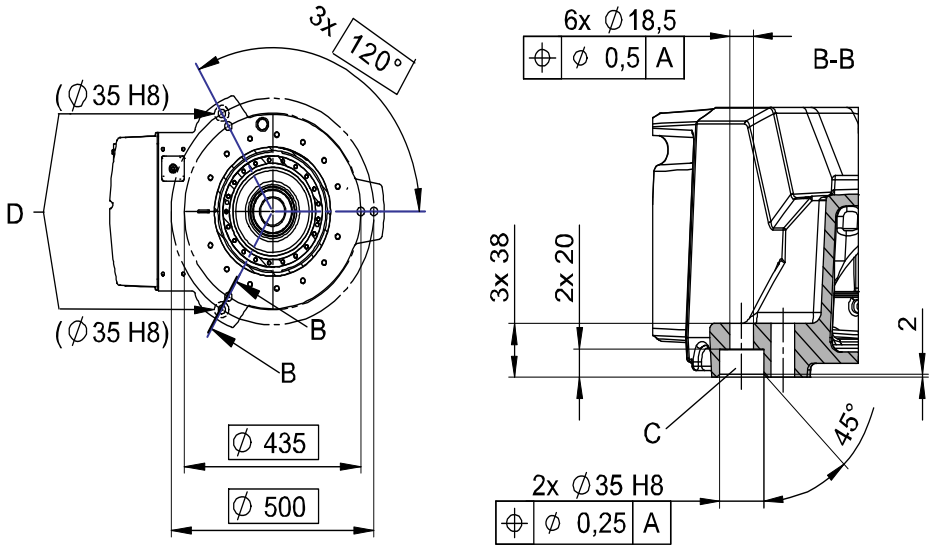

xx0800000271

A	Center axis 1. See graphic in *Fitting equipment on base and frame on page 65*.
C	Hole for guide sleeve
D	Rear bolt holes

Continues on next page

Dimension, mounting surface and guide sleeve

The figure shows the dimension of the mounting surface and guide sleeves.

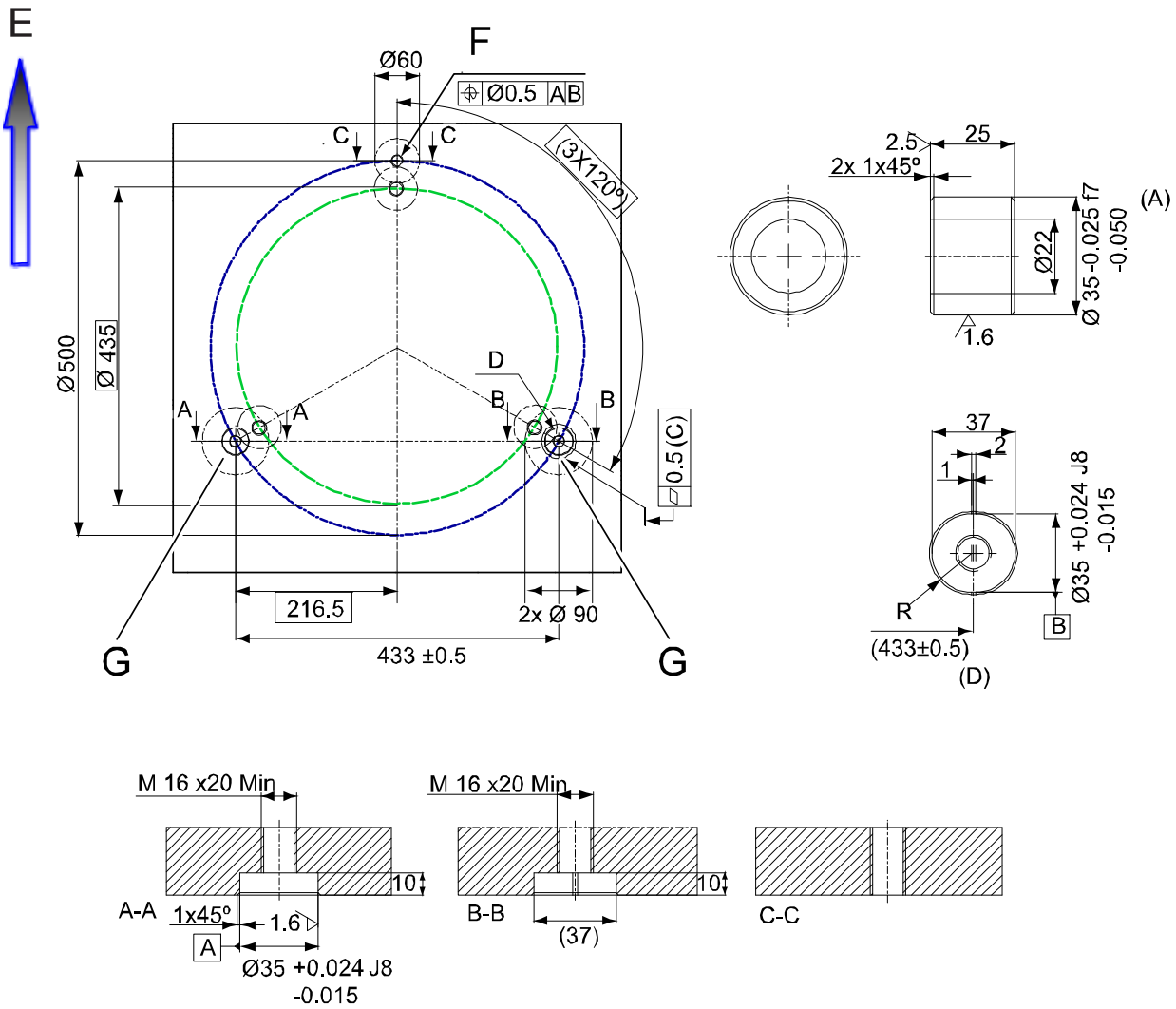

xx0800000295

E	Position of the front of the robot
F	4xM16, depth 30 minimum
G	Guide sleeves (2 pcs)

Continues on next page

Specification, attachment screws

The table specifies the type of securing screws and washers to be used to secure the robot to the foundation or base plate.

Securing parts/Facts	Dimension	Note
Securing screws, oiled	M16 x 60, quality 8.8-A3F	6 pcs Tightening torque: 200 Nm
Washers	17 x 30 x 3	6 pcs
Guide sleeves	Art. no see *Reference information*.	Added to the rear bolt holes, to allow the same robot to be re-mounted without program adjustments.
Tightening torque	See *Reference information*.	Oiled screws
Level surface requirements	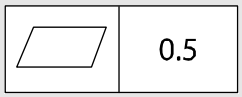 xx0300000251	

Orienting and securing the robot

Use this procedure to orient and secure the robot.

	Action	Note
1.	Make sure the installation site for the robot conforms to the specifications in section *Pre-installation procedure on page 44*.	
2.	Prepare the installation site with attachment holes.	Hole configuration of the base is shown in the figure in: • *Hole configuration, base on page 60*
3.	**CAUTION!** The different variants of the robot weighs according to the list. All lifting equipment used must be sized accordingly! • IRB 4600 - 60/2.05: 425 kg • IRB 4600 - 45/2.05: 425 kg • IRB 4600 - 40/2.55: 435 kg • IRB 4600 - 20/2.50: 418 kg	
4.	**CAUTION!** When the robot is put down after being lifted or transported, there is a risk of it tipping, if not properly secured.	

Continues on next page

Continued

	Action	Note
5.	Lift the robot to its installation site.	How to lift the robot is described in section: • *Lifting robot with roundslings on page 53*
6.	Fit two *guide sleeves* to the *rear bolts* in the base.	
7.	Guide the robot gently, using the attachment screws while lowering it into its mounting position.	Make sure the robot base is correctly fitted onto the guide sleeves.
8.	Fit the *securing screws* and *washers* in the attachment holes of the base.	
9.	Tighten the bolts in a criss-cross pattern to ensure that the base is not distorted.	

Securing robot on a mounting plate

When bolting a mounting plate or frame to a concrete floor, follow the general instructions for expansion-shell bolts.

Screw joints must be able to withstand the stress loads defined in section *Loads on foundation, robot on page 45*.

2.3.5. Fitting equipment on robot

Introduction

The robot features mounting holes for additional equipment.

Access to any of the following mounting holes may be obstructed by any additional cabling, equipment etc. fitted by the robot user. Make sure the required mounting holes are accessible when planning the robot cell.

NOTE!

Never drill a hole in the robot without first consulting ABB!

Fitting equipment on robot - Load areas

The shaded area indicates the permitted positions (center of gravity) for any extra equipment fitted in the holes intended for this purpose.

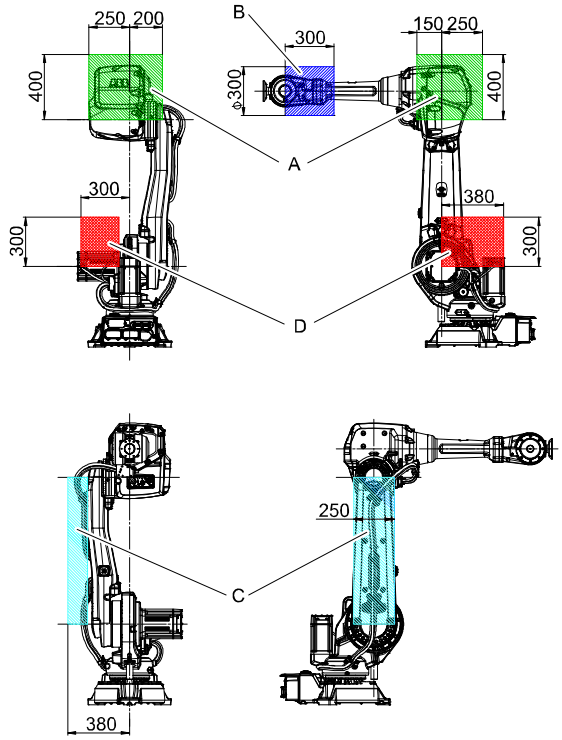

xx0800000275

Variant	Max load A	Max load B	Max load C	Max load A+C	Max load D
IRB 4600-60/2.05	15 kg	5 kg [1]	15 kg	15 kg	35 kg
IRB 4600-45/2.05	15 kg	5 kg [2]	15 kg	15 kg	35 kg
IRB 4600-40/2.55	15 kg	5 kg [3]	15 kg	15 kg	35 kg
IRB 4600-20/2.50	10 kg	1 kg	10 kg	10 kg	35 kg

- [1] Payload + B = Max 60 kg
- [2] Payload + B = Max 45 kg
- [3] Payload + B = Max 40 kg

NOTE! Maximum loads must never be exceeded!

Continues on next page

Fitting equipment on base and frame

The illustrations show the fitting holes available for fitting extra equipment on the base and frame of the robot.

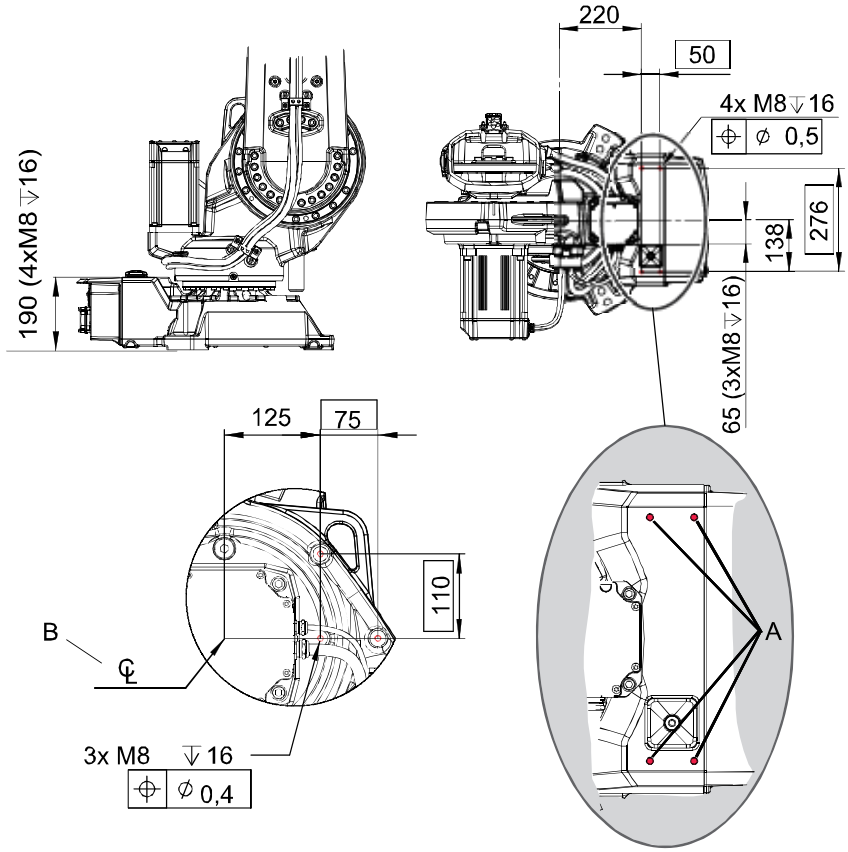

xx0800000276

A	Attachment holes on base
B	Center axis 2

Continues on next page

Continued

Fitting equipment on lower and upper arm

The illustrations show the fitting holes available for fitting extra equipment on the lower and upper arm of the robot.

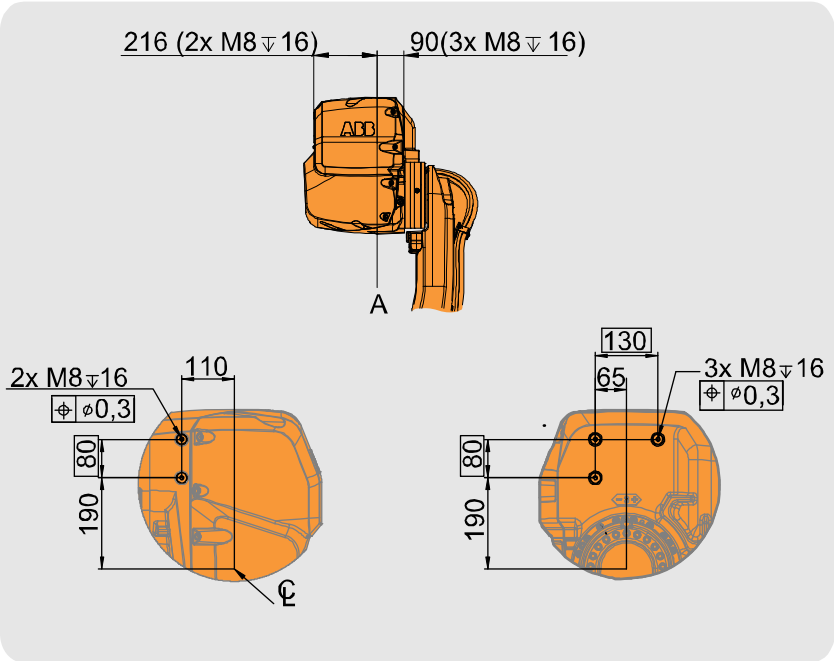

xx0800000280

A	Center axis 4

Continues on next page

Continued

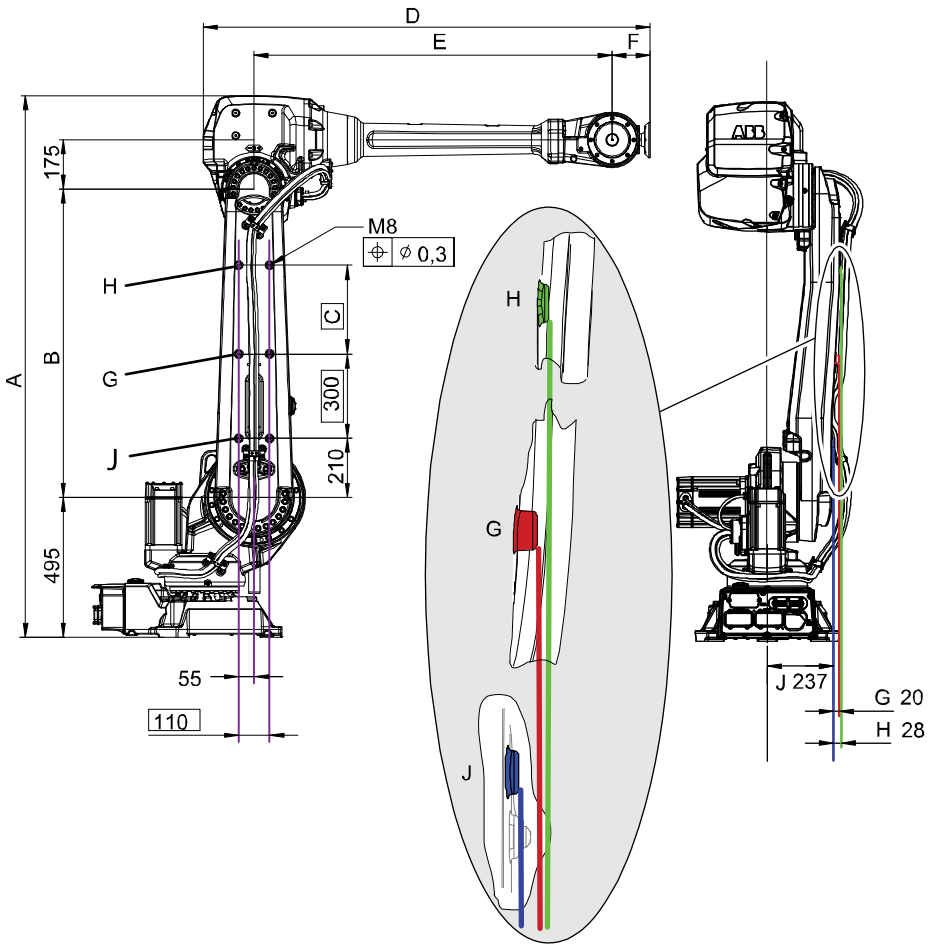

xx0800000279

Variant	A (mm)	B (mm)	C (mm)	D (mm)	E (mm)	F (mm)	G (mm)	H (mm)	J (mm)
60/2.05	1727	900	1)	1276	960	135	20	1)	237
45/2.05	1727	900	1)	1276	960	135	20	1)	237
40/2.55	1922	1095	315	1586	1270	135	20	28	237
20/2.50	1922	1095	315	1496.5	1230.5	85	20	28	237

1) Pos. H, (most upper holes for fitting equipment on lower arm) only applicable to IRB 4600 - 40/2.55 and 20/2.50. Measurement C therefore only applicable to these variants.

Attachment screws IRB 4600 - 60/2.05, 45/2.05: 4x M8, through.

Attachment screws IRB 4600 - 40/5.55, 20/2.50: 6x M8, through.

Continues on next page

Fitting equipment on wrist - IRB 4600 -60/2.05, -45/2.05, -40/2.55

The illustration shows the fitting holes available for fitting extra equipment on the wrist of the robot, variants IRB 4600 -60/2.05, -45/2.05 and -40/2.55.

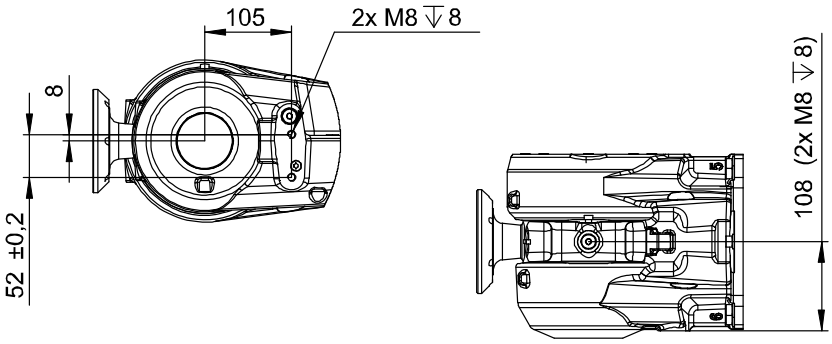

xx0800000277

NOTE! Do not remove screws indicated in the illustration below!

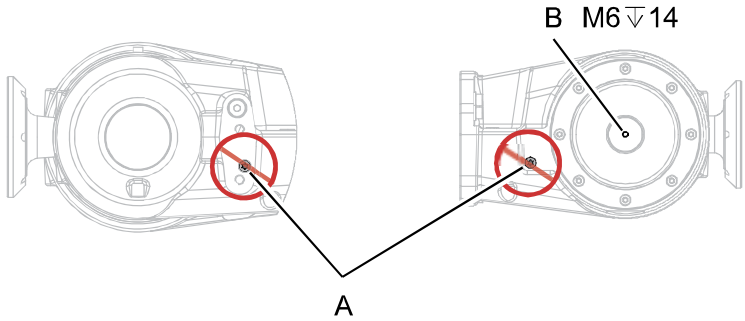

xx0800000281

A	Screws not to be removed! Do not use these holes for fitting equipment on the wrist!
B	Screw hole intended for swivel fitting.

Fitting equipment on mounting flange - IRB 4600 -60/2.05, -45/2.05, -40/2.55

The illustration shows the mechanical interface for the mounting flange, robot version IRB 4600 -60/2.05, -45/2.05, -40/2.55.

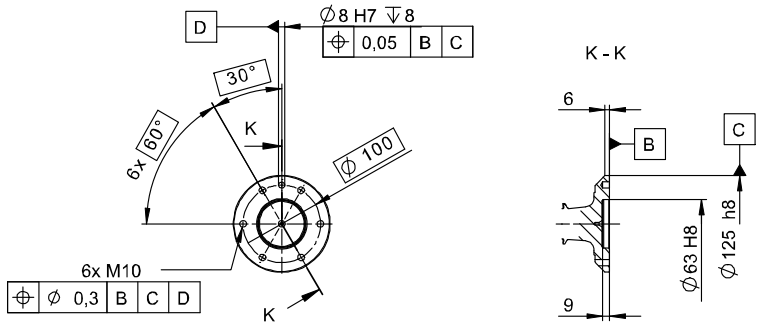

xx0800000282

NOTE!!

Use attachment screws M10, quality 12.9 and 15 mm *used* threadlength.

Continues on next page

Fitting equipment on wrist and mounting flange- IRB 4600 -20/2.50

The illustration shows the fitting holes available for fitting extra equipment on the wrist of the robot, variants IRB 4600 -20/2.50.

The illustration also shows the mechanical interface for the mounting flange, robot version IRB 4600 -20/2.50.

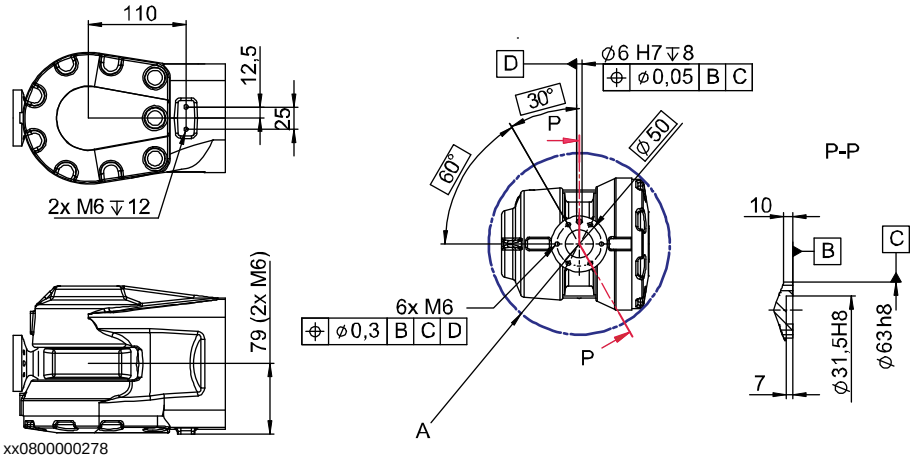

NOTE!

Use attachment screws M6, quality 12.9 and 10 mm *used* threadlength.

2.3.6. Loads

General

Any loads mounted on the robot must be defined correctly and carefully (with regard to the position of center of gravity and mass moments of inertia) in order to avoid jolting movements and overloading motors, gears and structure.

CAUTION!

Incorrectly defined loads may result in operational stops or major damage to the robot.

References

Load diagrams, permitted extra loads (equipment) and their positions are specified in the *Product Specification*. The loads must also be defined in the software as detailed in *Operating manual IRC5 with FlexPendant*.

Stop time and braking distances

Robot motor brake performance depends on any loads attached. For further information about brake performance, please contact ABB.

2.4 Restricting the working range

2.4.1. Introduction

General

When installing the robot, make sure that it can move freely within its entire working space. If there is a risk that it may collide with other objects, its working space should be limited.

The working range of the following axis may be restricted:

- Axis 1, hardware (mechanical stop) and software
- Axis 2, software
- Axis 3, software.

This section describes how to install hardware that restricts the working range.

Notice that adjustments must also be made in the software. References to software manuals are given in the following installation procedures.

2.4.2. Mechanically restricting the working range of axis 1

Mechanically restricting the working range

The information in this section is valid both for the floor and the suspended mounted robot.

The working range of axis 1 is limited by fixed mechanical stops. The working range can be reduced further by adding movable mechanical stops. The mechanical turning range can be limited between ±129° to ±16.5° in steps of 22.5° from synchronization position.

NOTE!

The software working range limitations must be adjusted to correspond to the changes in the mechanical limitations of the working range. The system parameters that must be changed in RobotWare 5 (*Upper joint bound* and *Lower joint bound*) are described in *Technical reference manual - System parameters*.

Required equipment

Equipment, etc.	Spare part no.	Note
Mechanical stop, axis 1	See Spare parts!	Includes two additional stop lugs, attachment screws, washers and instruction
Attachment screw	See Spare parts!	2 pcs/stop lug Hex socket head cap screw M12x40, quality 8.8-A3F
Washer	See Spare parts!	2 pcs/lug 13x24x2.5
Standard toolkit	-	The content is defined in the section *Standard toolkit on page 276*.
Other tools and procedures may be required. See references to these procedures in the step-by-step instructions below.		These procedures include references to the tools required.

Continues on next page

Additional stops

The additional stops are fitted as shown in the figure.

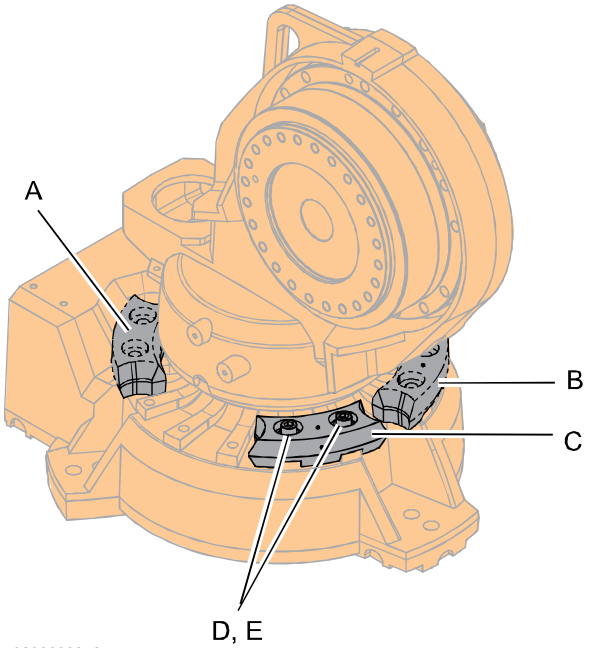

xx0800000273

A	Movable mechanical stop. Limited to -129°
B	Movable mechanical stop. Limited to +16.5°
C	Movable mechanical stop. Limited to -16.5°
D	Attachment screws
E	Washers

Fitting, mechancial stop axis 1

How to fit the additional mechanical stop to the base is described in the procedure.

Mounting instructions are also supplied with the kit.

	Action	Note
1.	Determine the position of the stop lugs.	See the figure *Additional stops on page 73* for guidance.
2.	Fit the stop lugs firmly with *attachment screws and washers* according to the figure *Additional stops on page 73*.	Specified in *Required equipment on page 72*. Tightening torque: 82 Nm

2.5 Cooling fan

2.5.1. Installation of cooling fan for motors, axes 1 and 2 (option)

General

A cooling fan can be installed on motor axis 1 or 2!

Location of cooling fans

The fans are installed on the motors, axes 1-2, as shown in the figure below.

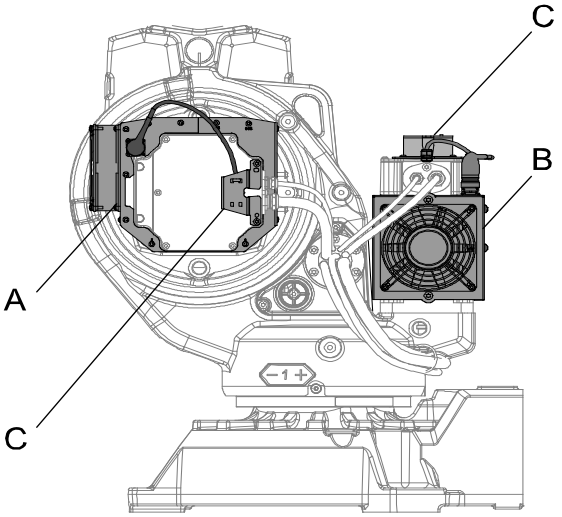

xx0900000135

A	Fan, motor axis 2
B	Fan, motor axis 1
C	Protection cover

Continues on next page

Cooling fan

The details of the cooling fan are shown in the figure below.

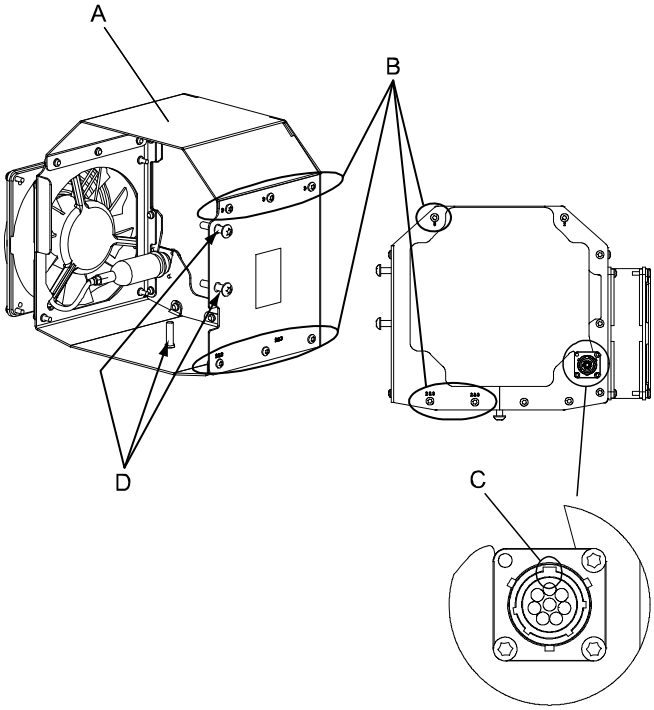

xx0500002158

A	Fanbox(motor axis 2)
B	Attachment screws, fanbox plates (9 pcs)
C	Groove in the connector
D	Tightening screws, fanbox (3 pcs)

Continues on next page

2.5.1. Installation of cooling fan for motors, axes 1 and 2 (option)

Continued

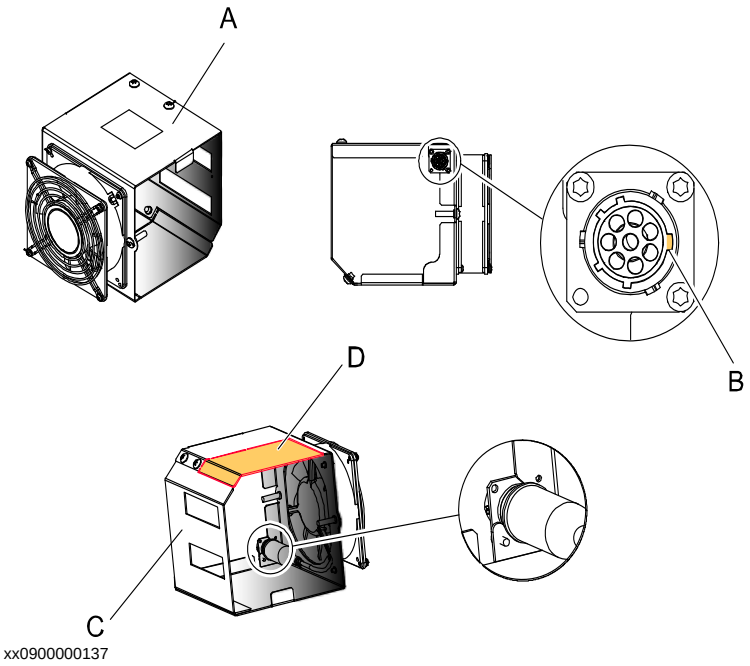

A	Fanbox(motor axis 1)
B	Groove in the connector
C	Back plate
D	Section of the fanbox that can be removed, if needed

Required equipment

Equipment	Art. no.	Note
Cooling fan axis 1, set	-	For Spare part no. see chapter *Spare parts,* section: • *Spare parts options on page 297*
Cooling fan axis 2, set	-	For Spare part no. see chapter *Spare parts,* section: • *Spare parts options on page 297*
Locking liquid	-	Loctite 243. Used for the three tightening screws.
Standard toolkit	-	The content is defined in the section *Standard toolkit on page 276*.
Circuit diagram	-	See the chapter *Circuit diagram*.
Other tools and procedures may be required. See references to these procedures in the step-by-step instructions below.		These procedures include references to the tools required.

Continues on next page

Installation, fan on motor axis 1

Use this procedure to install the cooling fan on motor axis 1.

	Action	Note
1.	**DANGER!** Turn off all electric power, hydraulic and pneumatic pressure supplies to the robot!	
2.	Remove the back plate of the fanbox.	See the figure in: • *Cooling fan on page 75*
3.	Place the fanbox around motor axis 1.	See the figure in: • *Cooling fan on page 75*
4.	Refit the back plate of the fanbox.	
5.	**TIP!** If needed, it is possible to remove a section of the fanbox.	See the figure in: • *Cooling fan on page 75*
6.	Push the fanbox in line with the connection box.	
7.	Fit the fanbox with two attachment screws M6x25.	
8.	Connect the fan connector to motor and fan.	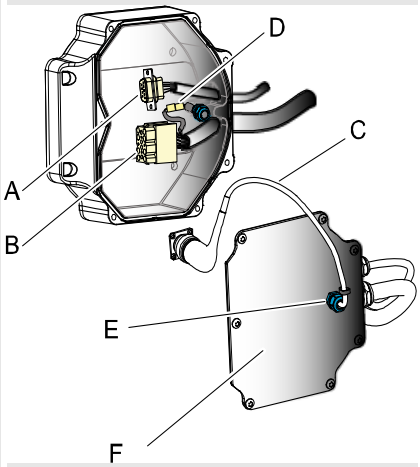 xx0900000405 Parts: • A: Connector, signal • B: Connector, power • C: Fan cable • D: Connector, fan • E: Cable gland • F: Motor cover, with fan cable

Continues on next page

2.5.1. Installation of cooling fan for motors, axes 1 and 2 (option)

Continued

	Action	Note
9.	After fitting the motor cover, fit the *protection cover* using two attachment screws for the motor cover.	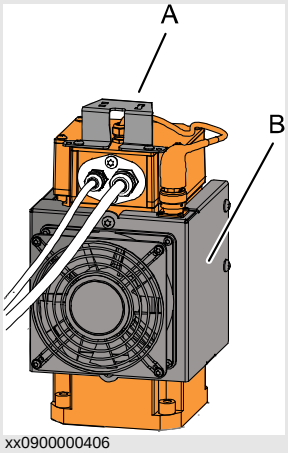 xx0900000406 Parts: • A: Protection cover • B: Fan
10.	Secure the fan cable to the protection cover with a cable strap.	

Installation, fan on motor axis 2

Use this procedure to install the cooling fan on motor axis 2.

	Action	Note
1.	**DANGER!** Turn off all electric power, hydraulic and pneumatic pressure supplies to the robot!	
2.	Remove the back plate of the fanbox.	See the figure in: • *Cooling fan on page 75*
3.	Place the fanbox around motor axis 1.	
4.	Refit the back plate of the fanbox.	See the figure in: • *Cooling fan on page 75*
5.	Fit the fanbox with two attachment screws M6x30.	

Continues on next page

	Action	Note
6.	Connect the fan connector to motor and fan.	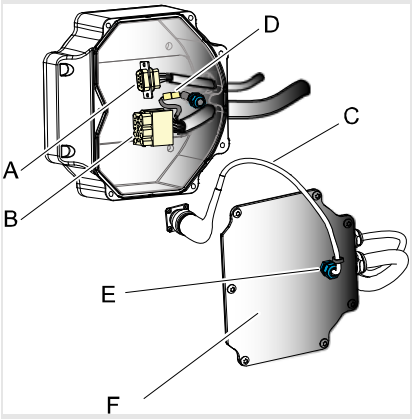 xx0900000405 Parts: • A: Connector, signal • B: Connector, power • C: Fan cable • D: Connector, fan • E: Cable gland • F: Motor cover, with fan cable
7.	After fitting the motor cover, fit the *protection cover* using two attachment screws for the motor cover.	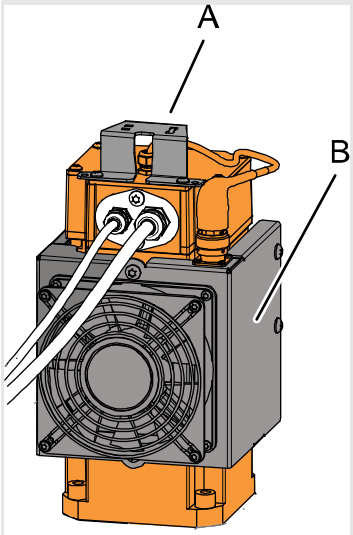 xx0900000406 Parts: • A: Protection cover • B: Fan

2.6 Foundry Plus, Cable protection

2.6.1. Installation of Foundry Plus Cable guard (option no. 908-1)

Introduction

For information how to install the Foundry Plus, Cable guard contact *After sales* at ABB.

2.7 Robot in hot environments

2.7.1. Start of robot in hot environments

Introduction

This procedure describes how to start the robot in a hot environment. This procedure must be performed the first time the robot is started in a hot environment or if it has not been used for some time in a hot environment.

There is a possibility that some overpressure has been built up in the system. This overpressure must be released before starting up the robot.

Releasing overpressure in gearboxes

Use this procedure before the start of the robot in a hot environment to release potential overpressure being built up in gearboxes.

	Action	Note
1.	**DANGER!** Turn off all electric power, hydraulic and pneumatic pressure supplies to the robot!	
2.	**CAUTION!** Before approaching the potentially hot robot component, observe the safety information in section *CAUTION - Hot parts may cause burns! on page 17*.	
3.	Open oil plug filling *very carefully*! **NOTE!** Open the oil plug just enough for the overpressure to be released.	**TIP!** Hold a cloth or some paper over the oil plug while opening it to prevent surplus oil causing burns or other injuries.
4.	Let the overpressure leave the gearbox.	
5.	Refit the oil plug.	
6.	Continue releasing the overpressure on all gearboxes.	

2.8 Robot in cold environments

2.8.1. Start of robot in cold environments

Introduction

This procedure describes how to start the robot in a cold environment.

Starting in cold environment

Use this procedure to start the robot in a cold environment if it is not starting the normal way:

	Action	Note
1.	Turn off motion supervision.	
2.	Start the robot.	

If still not starting...

If the robot is still not starting after turning off motion supervision, use this procedure:

	Action	Note
1.	Start the robot with its normal program but with lowered velocity.	Velocity can be regulated with the RAPID code instructions and the instruction AccSet.

Adjusting velocity

Depending on how cold the environment is and the program being used, the ramping up of velocity has to be adjusted. The table shows examples of how to adjust velocity:

Workcycles	AccSet	Velocity
3 Work cycles	20.20	100
5 Work cycles	40.40	400
5 Work cycles	60.60	600
5 Work cycles	100.100	1000
More than 5 Work cycles	100.100	Max.

If the program consists of large wrist movements, it is possible that the reorientation velocity, which is always high in predefined velocities, needs to be included in the ramping up.

2.9 Electrical connections

2.9.1. Robot cabling and connection points

Introduction

Connect the robot and controller to each other after securing them to the foundation. The lists below specify which cables to use for each respective application.

Main cable categories

All cables between the robot and controller are divided into the following categories:

Cable category	Description
Robot cables	Handles power supply to and control of the robot's motors as well as feedback from the serial measurement board. Specified in the table *Robot cables on page 84*.
Customer cables (option)	Handles communication with equipment fitted on the robot by the customer, including databus communication, low voltage signals and high voltage power supply + protective ground. See the product manual for the controller [1].
External axes cables (option)	Handles power supply to and control of the external axes' motors as well as feedback from the servo system. See the *Application manual - Additional axes and stand alone controller (M2004)*[1].

[1] Art. no. is specified in section *References*.

The cable categories are divided into sub-categories, specified below:

Continues on next page

Continued

Robot cables

These cables are included in the standard delivery. They are completely pre-manufactured and ready to plug in.

Cable sub-category	Description	Connection point, cabinet	Connection point, robot
Robot cable, power	Transfers drive power from the drive units in the control cabinet to the robot motors.	XS1	R1.MP
Robot cable, signals	Transfers resolver data from and power supply to the serial measurement board.	XS2	R1.SMB

Robot cable, power

Cable	Art. no.
Robot cable, power: 7 m	3HAC026787-001
Robot cable, power: 15 m	3HAC026787-002
Robot cable, power: 22 m	3HAC026787-003
Robot cable, power: 30 m	3HAC026787-004

Robot cable, signals

Cable	Art. no.
Robot cable signal, shielded: 7 m	3HAC2493-1
Robot cable signal, shielded: 15 m	3HAC2530-1
Robot cable signal, shielded: 22 m	3HAC2540-1
Robot cable signal, shielded: 30 m	3HAC2566-1

2.9.2. Customer connection on robot

Location of customer connection

For the connection of extra equipment to the robot, cables and air hose are integrated into the robot´s cabling, and there is one UTOW71210SH06 and one UTOW71626SH06 connector on the front part of the upper arm.

The customer connections are located on the robot as shown in the figure.

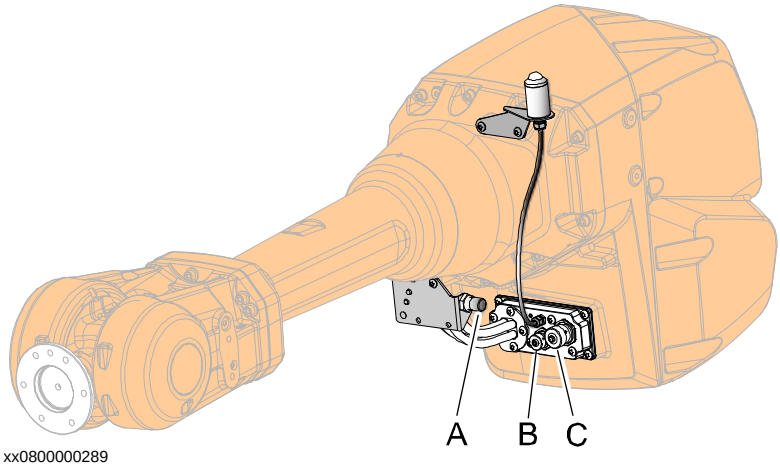

xx0800000289

Customer connection upper arm

A	Air M16x1.5 (24° cone sealing)
B	R2.CP
C	R2.CS

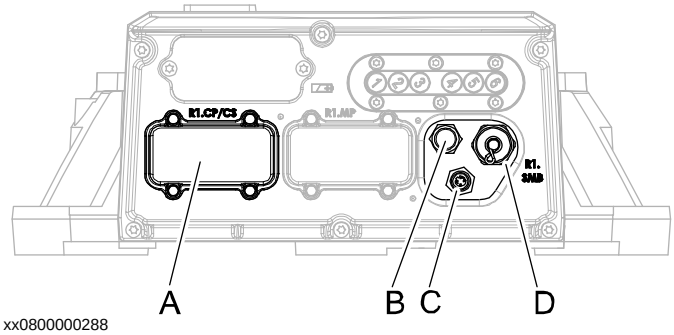

xx0800000288

Customer connections base

A	R1.CP/CS
B	Air M16x1.5
C	R1.CBUS
D	R1.SMB

Continues on next page

Continued

Extra equipment connections

Connections to the:

- air hose (3/8") is located on the front part of the upper arm and at the base. Max. 8 bar. Inner hose diameter: 9.5 mm.
- signal cabling (option) is located on the front of the upper arm.

Number of signals, customer connections R1.CP/CS:

- 23 (50V, 0.5A)
- 9 (300V, 2A). 8 are double crimped in R1.CP/CS and one is only accessible in the robot base.
- 2 DeviceNet R1.CP/CS
- One protective ground

Number of signals, customer connections R1.CBUS:

- 4 EtherNet R1.CBUS

Connection sets

To connect power and signal conductors to the robot base/upper arm connectors, the following parts are recommended.

Connection set	Connector	Art. no.	Content
PROC1 on base	R1.CP/CS	3HAC16667-1	• Sockets for cable area of 0.14-2.5 mm² • Hood foundry • Hinged frame, hood • Multicontact-module, female
Connector set on base	R1.CP/CS	3HAC033181-001	• Hose coupling • M12 connector, male
R2.CP/R2.CS	R2.CP/ R2.CS	3HAC025396-001	• Pins for cable area 0.21 - 0.93 mm² • Bottle shaped shrinking hose • Angle shaped shrinking hose

2.9.3. Customer connections on upper arm

Customer connections on upper arm

The figure shows the customer connections on the upper arm, including the optional signal lamp that can be fitted to the armhouse.

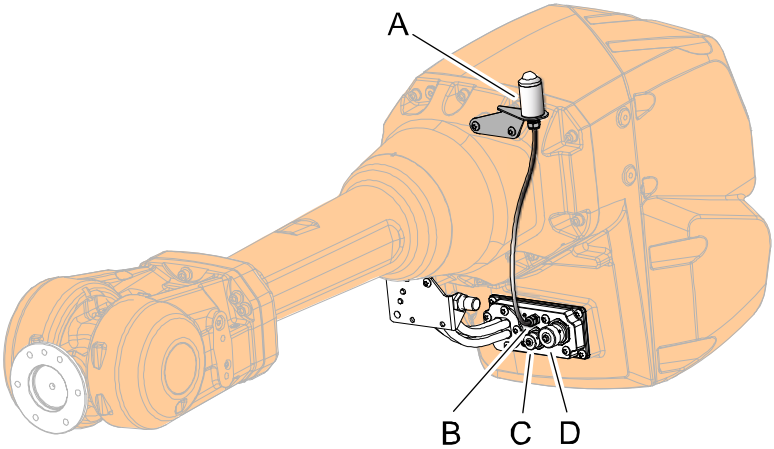

xx0800000290

A	Signal lamp
B	R3.H1 +, R3.H2 -
C	R2.CP
D	R2.CS

Power supply connections on upper arm

Signal name	Customer Terminal Controller	Customer Contact on Upper arm, R2	Customer Contact on robot base (cable between robot and controller not supplied)
CPA	XP6.1	R2.CP.A	R1.CP/CS.d1
CPB	XP6.2	R2.CP.B	R1.CP/CS.d6
CPC	XP6.3	R2.CP.C	R1.CP/CS.d3
CPD	XP6.4	R2.CP.D	R1.CP/CS.d4
CPE	XP6.1	R2.CP.E	R1.CP/CS.d1
CPF	XP6.2	R2.CP.F	R1.CP/CS.d6
CPG		R2.CP.G (Earth)	
CPH	-	R2.CP.H	R1.CP/CS.d7
CPJ	XP6.3	R2.CP.J	R1.CP/CS.d3
CPK	XP6.4	R2.CP.K	R1.CP/CS.d4

Continues on next page

Signal connection on upper arm

Signal name	Customer Terminal Controller	Customer Contact on Upper arm, R2	Customer Contact on robot base (cable between robot and controller not supplied)
CSA	XP5.1.1	R2.CS.A	R1.CP/CS.b1
CSB	XP5.1.2	R2.CS.B	R1.CP/CS.b2
CSC	XP5.2.1	R2.CS.C	R1.CP/CS.b3
CSD	XP5.2.2	R2.CS.D	R1.CP/CS.b4
CSE	XP5.2.3	R2.CS.E	R1.CP/CS.b5
CSF	XP5.2.4	R2.CS.F	R1.CP/CS.b6
CSG	XP5.1.9	R2.CS.G	R1.CP/CS.b7
CSH	XP5.1.10	R2.CS.H	R1.CP/CS.b8
CSJ	XP5.1.11	R2.CS.J	R1.CP/CS.b9
CSK	XP5.1.12	R2.CS.K	R1.CP/CS.b10
CSL	XP5.1.3	R2.CS.L	R1.CP/CS.b11
CSM	XP5.1.4	R2.CS.M	R1.CP/CS.b12
CSN	XP5.1.5	R2.CS.N	R1.CP/CS.b13
CSP	XP5.1.6	R2.CS.P	R1.CP/CS.b14
CSR	XP5.3.1	R2.CS.R	R1.CP/CS.b15
CSS	XP5.3.2	R2.CS.S	R1.CP/CS.b16
CST	XP5.3.3	R2.CS.T	R1.CP/CS.b18
CSU	XP5.3.4	R2.CS.U	R1.CP/CS.b19
CSV	XP5.3.5	R2.CS.V	R1.CP/CS.b20
CSW	XP5.3.6	R2.CS.W	R1.CP/CS.b21
CSX	XP5.2.9	R2.CS.X	R1.CP/CS.b22
CSY	XP5.2.10	R2.CS.Y	R1.CP/CS.b23
CSZ	XP5.2.11	R2.CS.Z	R1.CP/CS.b24

3 Maintenance

3.1. Introduction

Structure of this chapter

This chapter details all maintenance activities recommended for the robot and any external units of the robot.

It is based on the maintenance schedule located at the beginning of the chapter. The schedule contains information about required maintenance activities including intervals and refers to procedures for the activities.

Each procedure contains all the information required to perform the activity, that is, required tools and materials.

The procedures are gathered in different sections and divided according to the maintenance activity.

Safety information

Before any service work is commenced, it is extremely important that all safety information is observed!

There are general safety aspects that must be read through, as well as more specific safety information that describes the danger and safety risks when performing the procedures. Read the chapter *Safety on page 13* before performing any service work.

NOTE!

If the robot is connected to power, always make sure that the robot is connected to *earth* before starting any maintenance work!

For more information see:

- Product manual - IRC5

3.2 Maintenance schedule and expected component life

3.2.1. Specification of maintenance intervals

Introduction

The intervals are specified in different ways depending on the type of maintenance activity to be carried out and the working conditions of the robot:

- Calendar time: specified in months regardless of whether the robot system is run or not
- Operating time: specified in operating hours. More frequent running of the robot means more frequent maintenance activities.
- SIS: specified by the robot's SIS (Service Information System). A typical value is given for a typical work cycle, but the value will differ depending on how hard each part is run. The SIS is further detailed in the Operating manual *Service Information System*. Document number can be found in section *References*.

3.2.2. Maintenance schedule

General

The robot must be maintained regularly to ensure proper function. The maintenance activities and intervals are specified in the table below.

Non-predictable situations also give rise to inspections of the robot. Any damages must be attended to immediately!

The inspection intervals *do not* specify the life of each component.

Values for these are specified in the section *Expected component life on page 94*

Activities and intervals, standard equipment

The table below specifies the required maintenance activities and intervals:

Maintenance activity	Equipment	Interval	Detailed in section
Cleaning	Robot	-	• *Cleaning, robot on page 150*
Inspection	Axis 1 gearbox, oil level	Every: • 12 months [2)]	• *Inspecting oil level, gearbox axis 1 on page 95*
Inspection	Axis 2 gearbox, oil level	Every: 12 months[2)]	• *Inspecting oil level, gearbox axis 2 on page 98*
Inspection	Axis 3 gearbox, oil level	Every: 12 months[2)]	• *Inspecting oil level, gearbox axis 3 on page 100*
Inspection	Axis 4 gearbox, oil level	Every: 12 months[2)]	• *Inspecting oil level, gearbox axis 4 on page 102*
Inspection	Axis 5 gearbox, oil level	Every: 12 months[2)]	• *Inspecting oil level, gearbox axes 5 - 6 on page 104*
Inspection	Axis 6 gearbox, oil level	Every: 12 months[2)]	• *Inspecting oil level, gearbox axes 5 - 6 on page 104*
Inspection	Robot harness	Every: 12 months[4)]	• *Inspecting the cable harness on page 108*
Inspection	Information labels	Every: 12 months	• *Inspecting information labels on page 110*
Inspection	Dampers	Every: 12 months	• *Inspecting dampers on page 116*
Inspection	Pressure relief valve	Every: • 12 months[5)]	• *Inspecting the pressure relief valve on page 118*
Inspection	Mechanical stop, axis 1	Every: 12 months	• *Inspecting mechanical stop pin, axis 1 on page 112*

Continues on next page

Continued

Maintenance activity	Equipment	Interval	Detailed in section
Changing	Axis 1 gearbox oil: Kyodo Yushi TMO 150	First change when DTC [1] reads: 6,000 hours Second change when DTC [1] reads: 24,000 hours Following changes: Every 24,000 hours	Do not mix with other oils! • *Changing oil, gearbox axis 1 on page 124*
Changing	Axis 2 gearbox oil: Kyodo Yushi TMO 150	First change when DTC [1] reads: 6,000 hours Second change when DTC [1] reads: 24,000 hours Following changes: Every 24,000 hours	Do not mix with other oils! • *Changing oil, gearbox axis 2 on page 129*
Changing	Axis 3 gearbox oil: Kyodo Yushi TMO 150	First change when DTC [1] reads: 6,000 hours Second change when DTC [1] reads: 24,000 hours Following changes: Every 24,000 hours	Do not mix with other oils! • *Changing oil, gearbox axis 3 on page 132*
Changing	Axis 4 gearbox oil: Mobilgear 600 XP320	No change needed	• *Changing oil, gearbox axis 4 on page 138*
Changing	Axes 5 and 6 gearbox, oil: Optimol Optigear BM 100	First change when DTC [1] reads: 6,000 hours Second change when DTC [1] reads: 24,000 hours Following changes: Every 24,000 hours	• *Changing oil, gearbox axes 5 and 6 on page 142*
Overhaul	Robot	Every: 40,000 hours	• *Expected component life on page 94*
Replacement	SMB Battery pack	Battery low alert [3]	• *Replacing SMB battery on page 147*

- [1] DTC = Duty Time Counter. Shows the operational time of the robot.
- [2] If the robot is run at ambient temperatures higher than 40°C, the equipment requires maintenance every 12,000 hours.
- [3] Battery low alert (38213 Battery charge low) is displayed when remaining backup capacity (robot powered off) is less than 2 months. Typical lifetime of a new battery is 36 months if the robot is powered off 2 days/week or 18 months if the robot is

Continues on next page

powered off 16 hours/day. The lifetime can be extended (approx. 3 times) for longer production breaks by a battery shutdown service routine. See Operating manual - IRC5 with FlexPendant for instructions.

- [4] Replace when damage or cracks is detected or life limit is approaching as specified in section *Expected component life on page 94*.
- [5] Check more often if the environment is very contaminated.

Activities and intervals, optional equipment

The table below specifies the required maintenance activities and intervals for common optional equipment. The maintenance of other external equipment for the robot is detailed in separate documentation.

Maintenance activity	Equipment	Interval	Note	Detailed in section
Inspection	Signal lamp			*Inspecting Signal lamp (option)*
Inspection	Additional mechanical stop, axis 1	Every: 12 months		• *Inspecting additional mechanical stops on page 114*
Inspection	Motor fans, axes 1, 2	Every 12 months	Inspect the fans for contamination that could hinder the air supply. Clean if necessary.	-

3.2.3. Expected component life

General

The expected life of a specific component of the robot can vary greatly depending on how hard it is run.

Expected component life

Component	Expected life	Note
Cable harness Normal usage [1]	40,000 hours [3]	Not including: • Optional upper arm harnesses
Cable harness Extreme usage [2]	20,000 [3]	Not including: • Optional upper arm harnesses
Gearboxes [4]	40,000 hours	

[1] Examples of "normal usage" in regard to movement: most material handling applications.

[2] Examples of "extreme usage" in regard to movement: presstending, very severe palletizing applications, major use of axis 1 movement.

[3] Severe chemical, thermal or similar environments can result in shortened life expectancy.

[4] Depending on application, the lifetime can vary. The Service Information System (SIS), integrated in the robot software, can be used as a guidance for planning service of gearbox for the individual robot. This applies to gearboxes on axes 1, 2 and 3. The lifetime of gearbox axes 4, 5 and 6 is not calculated by SIS (See the *Operating manual - Service Infomation System*) In applications such as Foundry or Washing the robot can be exposed to chemicals, high temperature or humidity which can have an effect on the lifetime of gearboxes. Contact the local *ABB Robotics Service team* for more information.

The SIS for an M2004 system is described in the *Operating manual - Service Information System*. Document number can be found in section .

3.3 Inspection activities

3.3.1. Inspecting oil level, gearbox axis 1

Location of gearbox, axis 1

The gearbox axis 1 is located between the frame and base of the robot. The oil plug inspection is shown in the figure.

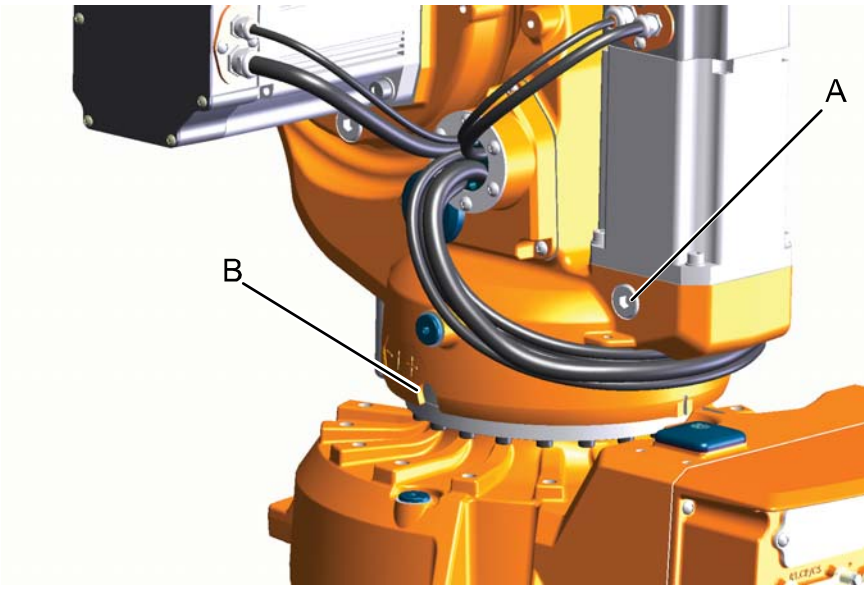

xx0800000304

A	Oil plug, inspection
B	Oil plug, gearbox

Required equipment

Equipment	Note
Lubrication oil.	The type and amount of oil in the gearbox is detailed in section *Type of oil, gearboxes on page 122*.
Standard toolkit	The content is defined in the section *Standard toolkit on page 276*.
Other tools and procedures may be required. See references to these procedures in the step-by-step instructions below.	These procedures include references to the tools required.

Continues on next page

Inspecting oil level, gearbox axis 1 (Standard robot)

Use this procedure to inspect the oil level in gearbox axis 1 of a standard robot.

CAUTION!

The gearbox can contain an *excess of pressure* that can be hazardous. Open the oilplug carefully in order to let out the excess pressure.

	Action	Note
1.	**WARNING!** Handling gearbox oil involves several safety risks. Before proceeding, please read the safety information in the section *WARNING - Safety risks during work with gearbox lubricants (oil or grease) on page 40*.	
2.	**DANGER!** Turn off all electric power, hydraulic and pneumatic pressure supplies to the robot!	
3.	Open the oil plug, inspection.	See the figure in: • *Location of gearbox, axis 1 on page 95*
4.	Required oil level: • 3 ±3 mm below the lower edge of the oil plug hole.	
5.	Add oil if required.	How to fill oil is described in section: • *Changing oil, gearbox axis 1 on page 124*
6.	Refit the oil plug, inspection.	Tightening torque: • 60 Nm

Continues on next page

Inspecting oil level, gearbox axis 1 (Suspended robot)

Use this procedure to inspect the oil level in gearbox axis 1 of a suspended robot provided it is fitted in a suspended position.

NOTE!

The oil level can only be inspected with the robot mounted in a suspended position! The level of oil will be above the oil plug hole and will therefore result in oil leakage if opened.

CAUTION!

The gearbox can contain an *excess of pressure* that can be hazardous. Open the oilplug carefully in order to let out the excess pressure.

	Action	Note
1.	**DANGER!** Turn off all electric power, hydraulic and pneumatic pressure supplies to the robot!	
2.	Open the *oil plug* on gearbox axis 1.	See the figure in: • *Location of gearbox, axis 1 on page 95*
3.	Required oil level: • up to the lower edge of the oil plug hole.	**NOTE!** The oil plugs on gearbox axis 1 are now on top.
4.	Add oil if required.	How to fill oil is described in section: • *Changing oil, gearbox axis 1 on page 124*
5.	Refit the oil plug.	Tightening torque: • 3 Nm

3.3.2. Inspecting oil level, gearbox axis 2

Location of gearbox axis 2

The gearbox axis 2 is located in the lower arm rotational center, underneath the motor attachment. The oil plugs are shown in the figure.

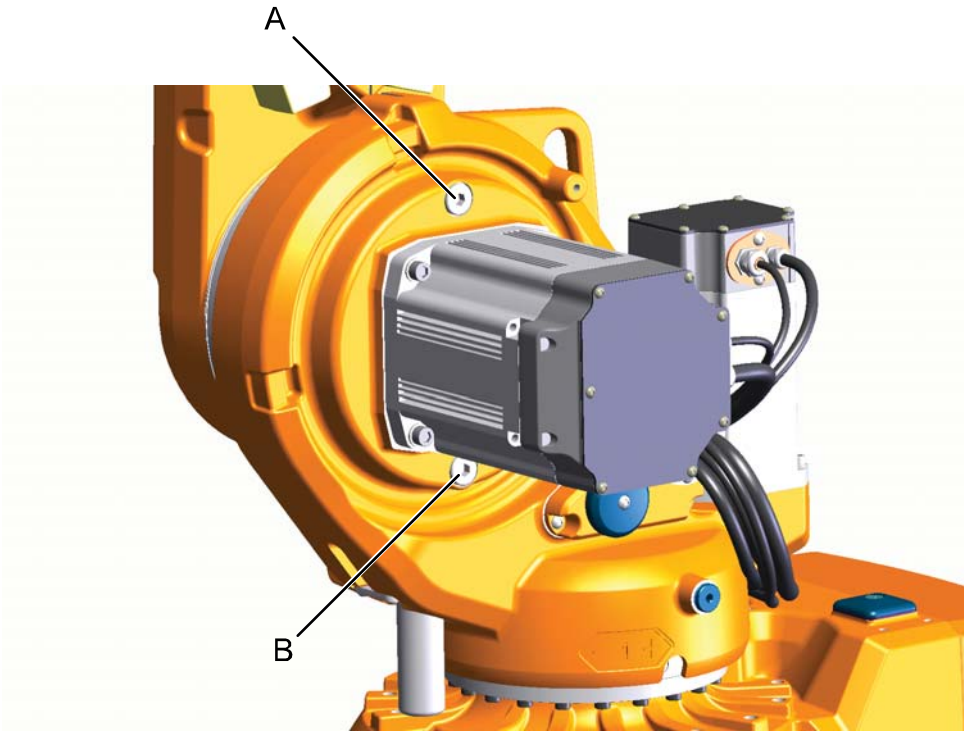

xx0800000305

A	Oil plug, filling
B	Oil plug, draining (Quick connect fitting)

Required equipment

Equipment	Note
Lubrication oil	The type and amount of oil in the gearbox is detailed in section *Type of oil, gearboxes on page 122*.
Standard toolkit	The content is defined in the section *Standard toolkit on page 276*.
Other tools and procedures may be required. See references to these procedures in the step-by-step instructions below.	These procedures include references to the tools required.

Continues on next page

Inspecting oil level, gearbox axis 2

Use this procedure to inspect the oil level in gearbox axis 2.

CAUTION!

The gearbox can contain an *excess of pressure* that can be hazardous. Open the oilplug carefully in order to let out the excess pressure.

	Action	Note
1.	**WARNING!** Handling gearbox oil involves several safety risks. Before proceeding, please read the safety information in the section *WARNING - Safety risks during work with gearbox lubricants (oil or grease) on page 40*.	
2.	**DANGER!** Turn off all electric power, hydraulic and pneumatic pressure supplies to the robot!	
3.	Open the correct *oil plug* depending on how the robot is fitted: • Standard: *oil plug, filling* • Suspended: *oil plug, draining (Quick connect fitting)* **NOTE!** Always open the oil plug on top, depending how the robot is fitted!	See the figure in: • *Location of gearbox axis 2 on page 98*
4.	Measure the oil level at the oil plug hole.	Required oil level: • 42 ±5 mm below the lower edge of the oil plug hole
5.	Add oil if required.	How to fill oil is described in section • *Changing oil, gearbox axis 2 on page 129*
6.	Refit the oil plug, filling.	Tightening torque: • 60 Nm

3.3.3. Inspecting oil level, gearbox axis 3

Location of gearbox, axis 3

The gearbox axis 3 is located in the upper arm rotational center, underneath the motor attachment. The *oil plugs* are shown in the figure.

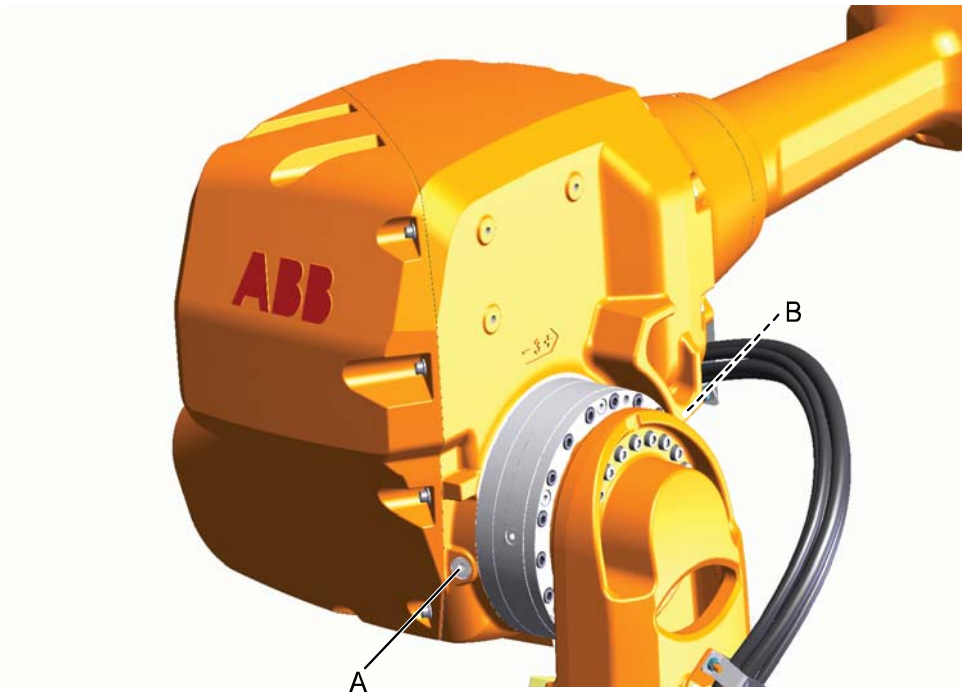

xx0800000306

A	Oil plug, armhouse
B	Oil plug, gearbox (not visible in this figure)

Required equipment

Equipment	Note
Lubrication oil	The type and amount of oil in the gearbox is detailed in section *Type of oil, gearboxes on page 122*.
Standard toolkit	The content is defined in the section *Standard toolkit on page 276*.
Other tools and procedures may be required. See references to these procedures in the step-by-step instructions below.	These procedures include references to the tools required.

Continues on next page

Inspecting the oil level, gearbox axis 3

Use this procedure to inspect the oil level in gearbox axis 3.

CAUTION!

The gearbox can contain an *excess of pressure* that can be hazardous. Open the oilplug carefully in order to let out the excess pressure.

	Action	Note
1.	**WARNING!** Handling gearbox oil involves several safety risks. Before proceeding, please read the safety information in the section *WARNING - Safety risks during work with gearbox lubricants (oil or grease) on page 40*.	
2.	Move the robot to where the upper arm is placed in a +30° position.	
3.	**DANGER!** Turn off all electric power, hydraulic and pneumatic pressure supplies to the robot!	
4.	Open the *oil plug, armhouse*.	See the figure in: • *Location of gearbox, axis 3 on page 100*
5.	Required oil level: • When the upper arm is placed in a +30° position, the oil in the gearbox shall be just below the edge of the oil plug hole.	
6.	Add oil if required.	How to fill oil is described in section: • *Changing oil, gearbox axis 3 on page 132*
7.	Refit the oil plug.	Tightening torque: • 10 Nm

3.3.4. Inspecting oil level, gearbox axis 4

Location of gearbox, axis 4

The gearbox axis 4 is located in the upper armhouse. The oil plug is shown in the figure.

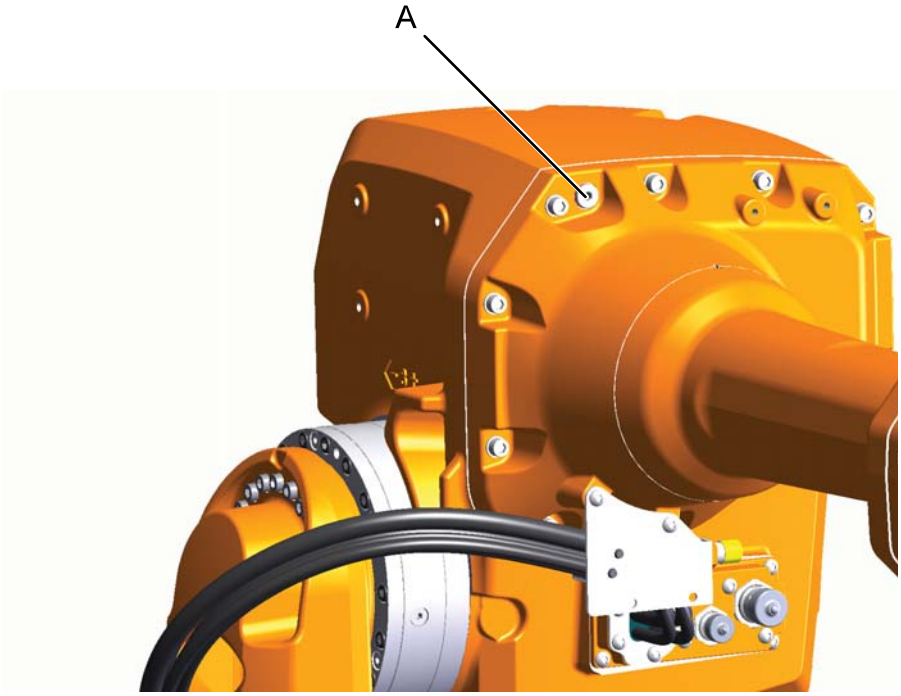

xx0800000307

A	Oil plug, for filling and draining

Required equipment

Equipment	Note
Lubrication oil	The type and amount of oil in the gearbox is detailed in section *Type of oil, gearboxes on page 122*.
Standard toolkit	The content is defined in the section *Standard toolkit on page 276*.
Other tools and procedures may be required. See references to these procedures in the step-by-step instructions below.	These procedures include references to the tools required.

Continues on next page

Inspecting the oil level, gearbox axis 4

Use this procedure to inspect the oil level in gearbox axis 4.

CAUTION!

The gearbox can contain an *excess of pressure* that can be hazardous. Open the oilplug carefully in order to let out the excess pressure.

	Action	Note
1.	**WARNING!** Handling gearbox oil involves several safety risks. Before proceeding, please read the safety information in the section *WARNING - Safety risks during work with gearbox lubricants (oil or grease) on page 40*.	
2.	Move the robot to where the upper arm is placed in a -90° position. That is, the upper arm shall be pointing staight up.	
3.	**DANGER!** Turn off all electric power, hydraulic and pneumatic pressure supplies to the robot!	
4.	Open the *oil plug, filling*.	See the figure in: • *Location of gearbox, axis 4 on page 102*
5.	Required oil level: • 35 ±5 mm below the edge of the oil plug hole, when the upper arm is pointing straight up.	
6.	Add oil if required.	How to fill oil is described in section: • *Changing oil, gearbox axis 4 on page 138*
7.	Refit the oil plug, filling.	Tightening torque: • 10 Nm

3.3.5. Inspecting oil level, gearbox axes 5 - 6

Location of gearbox, axes 5-6

The gearbox axes 5-6 is located in the wrist unit. The oil plug is shown in the figure.

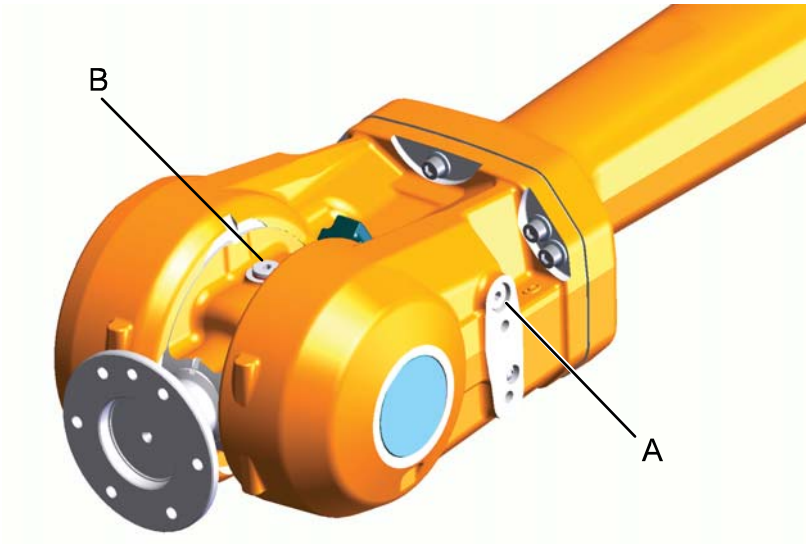

xx0800000308

The figure shows IRB 4600 -60/2.05, -45/2.05, -40/2.55 with wrist 60 kg

A	Oil plug, wrist
B	Oil plug, tilt house

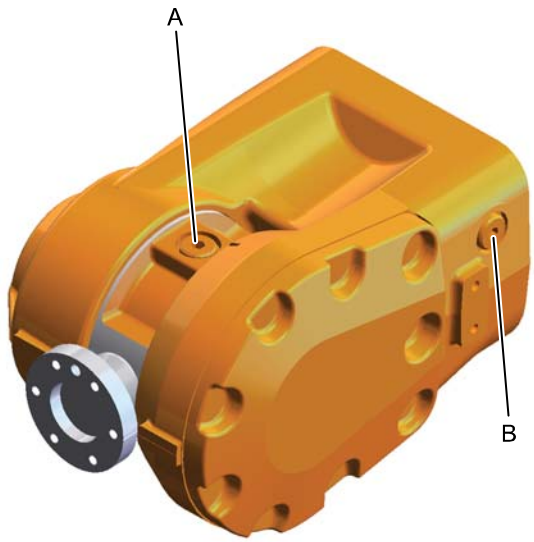

xx0900000139

The figure shows IRB 4600 -20/2.50 with wrist 12/20 kg

A	Oil plug, draining
B	Oil plug, filling (also used as air inlet when draining from oil plug A)

Continues on next page

Required equipment

Equipment	Note
Lubrication oil	The type and amount of oil in the gearbox is detailed in section *Type of oil, gearboxes on page 122*.
Standard toolkit	The content is defined in the section *Standard toolkit on page 276*.
Other tools and procedures may be required. See references to these procedures in the step-by-step instructions below.	These procedures include references to the tools required.

Inspecting oil level, gearbox axes 5-6 - wrist 60 kg

Use this procedure to inspect the oil level in gearbox axes 5-6.

CAUTION!

The gearbox can contain an *excess of pressure* that can be hazardous. Open the oilplug carefully in order to let out the excess pressure.

	Action	Note
1.	**WARNING!** Handling gearbox oil involves several safety risks. Before proceeding, please read the safety information in the section *WARNING - Safety risks during work with gearbox lubricants (oil or grease) on page 40*.	
2.	Move the robot to where the upper arm is placed in its calibration position.	
3.	**DANGER!** Turn off all electric power, hydraulic and pneumatic pressure supplies to the robot!	
4.	Open the *oil plug, wrist*.	See the figure in: • *Location of gearbox, axes 5-6 on page 104*
5.	Required oil level: • 3 ±3 mm below the edge of the oil plug hole.	**NOTE!** Open the *oil plug, tilthouse* when inspecting. This will level up oil in axes 5 and 6. See the figure in: • *Location of gearbox, axes 5-6 on page 104*

Continues on next page

Continued

	Action	Note
6.	Add *oil* if required.	How to fill oil is decribed in section: • *Changing oil, gearbox axes 5 and 6 on page 142*
7.	Refit the oil plugs.	Tightening torque: • 10 Nm

Inspecting oil level, gearbox axes 5-6 alternative method - wrist 60 kg

Use this procedure to inspect the oil level in gearbox axes 5-6 as an alternative method.

CAUTION!

The gearbox can contain an *excess of pressure* that can be hazardous. Open the oilplug carefully in order to let out the excess pressure.

	Action	Note
1.	**WARNING!** Handling gearbox oil involves several safety risks. Before proceeding, please read the safety information in the section *WARNING - Safety risks during work with gearbox lubricants (oil or grease) on page 40*.	
2.	Move the robot to where the upper arm is placed in its calibration position.	
3.	Move the upper arm to a 90° position.	This will put the *oil plug, wrist* on top. See the figure in: • *Location of gearbox, axes 5-6 on page 104* **NOTE!** In this position it is **not** possible to open the *oil plug, tilthouse*, in order to level up oil in axes 5 and 6!
4.	**DANGER!** Turn off all electric power, hydraulic and pneumatic pressure supplies to the robot!	
5.	Open the *oil plug, wrist*.	See the figure in: • *Location of gearbox, axes 5-6 on page 104*
6.	Required oil level: • 63 ±3 mm below the edge of the oil plug hole.	

Continues on next page

	Action	Note
7.	Add oil if required.	How to fill oil is described in section: • *Changing oil, gearbox axes 5 and 6 on page 142*
8.	Refit *oil plug, wrist*.	Tightening torque: • 10 Nm

Inspecting oil level, gearbox axes 5-6 - wrist 12/20 kg

Use this procedure to fill oil in the gearbox.

CAUTION!

The gearbox can contain an *excess of pressure* that can be hazardous. Open the oilplug carefully in order to let out the excess pressure.

	Action	Note
1.	Move the robot to a position where the upper arm is close to horizontal and axis 4 in the calibration position.	
2.	**DANGER!** Turn off all electric power, hydraulic and pneumatic pressure supplies to the robot!	
3.	Remove the oil plug filling *oil plug filling*.	See the figure in: • *Location of gearbox, axes 5-6 on page 104*
4.	Required oil level: • Level with the edge of the oil plug hole.	
5.	If necessary, refil oil.	How to fill oil is described in section: • *Changing oil, gearbox axes 5 and 6 on page 142*
6.	Refit the oil plug.	Tightening torque: • 10 Nm

3.3.6. Inspecting the cable harness

Location of cable harness

The figure shows the location of the cable harness.

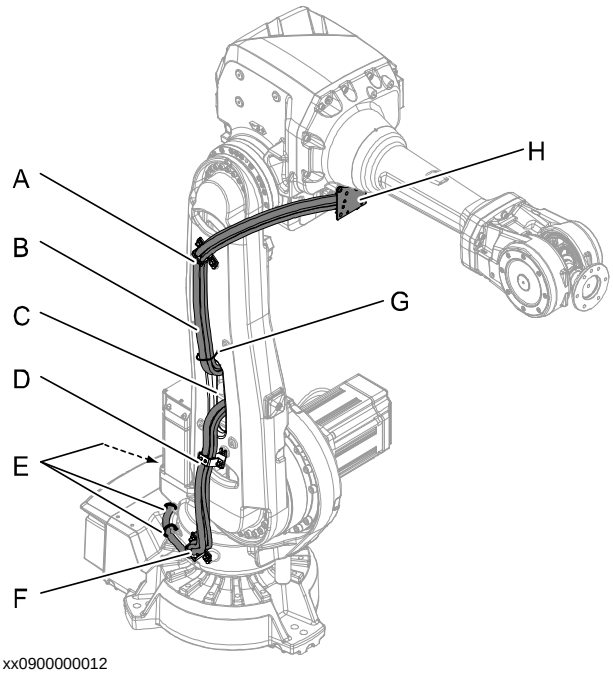

xx0900000012

A	Bracket, lower arm
B	Cable harness
C	Hole in lower arm
D	Bracket, lower arm
E	Cable straps, one not visible here (steel)
F	Bracket, frame
G	Cable strap, lower arm (plastic)
H	Bracket, armhouse

Required equipment

Equipment	Note
Standard toolkit	The content is defined in the section *Standard toolkit on page 276*.
Other tools and procedures may be required. See references to these procedures in the step-by-step instructions below.	These procedures include references to the tools required.
Circuit diagram	See chapter *Circuit diagram*.

Continues on next page

Inspecting the cable harness

Use this procedure to inspect the cable harness.

	Action	Note
1.	**DANGER!** Turn off all electric power, hydraulic and pneumatic pressure supplies to the robot!	
2.	Make an overall visual inspection of the cable harness in order to detect wear or damage.	
3.	Check the *connectors at the base*.	See the figure in: • *Location of cable harness on page 108*
4.	Check the *connectors at the armhouse*.	See the figure in: • *Location of cable harness on page 108*
5.	Check all *brackets* and *straps* are properly attached to the robot.	See the figure in: • *Location of cable harness on page 108*
6.	Replace the cable harness if wear, cracks or damage is detected.	How to replace the cable harness is described in sections: • *Removing the complete cable harness on page 159* • *Refitting the complete cable harness on page 169*

3.3.7. Inspecting information labels

Location of information labels

The figure shows the location of the information labels to be inspected.

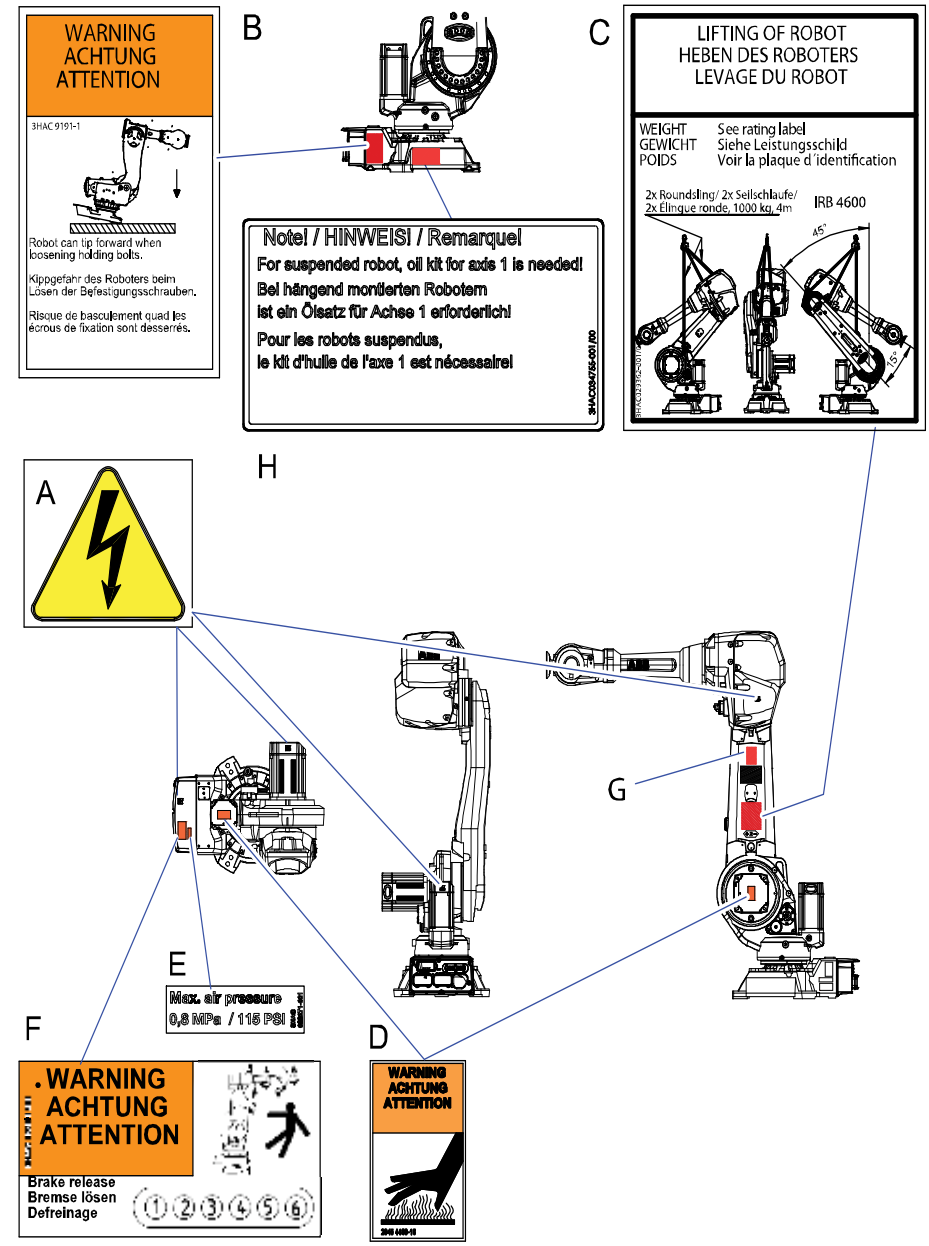

xx0800000310

A	Warning - Symbol of flash (4 pcs)
B	Warning - Risk of tipping
C	Label - Lifting instruction
D	Warning - "High temperature" (2 pcs)
E	Label - Max. air pressure
F	Warning - Brake release unit
G	Label - Calibration
H	Label -Suspended robot

Continues on next page

Required equipment

Equipment	Spare part no.	Note
Labels and plate set	-	Includes all labels specified in the figure. Labels include text in english, german and french.

Inspecting labels

Use this procedure to inspect the labels on the robot.

	Action	Note
1.	**DANGER!** Turn off all electric power, hydraulic and pneumatic pressure supplies to the robot!	
2.	Check all labels.	See the figure in *Location of information labels on page 110*.
3.	Replace any missing or damaged labels.	

3.3.8. Inspecting mechanical stop pin, axis 1

Location of mechanical stop pin, axis 1

The mechanical stop pin is located on the frame as shown in the figure.

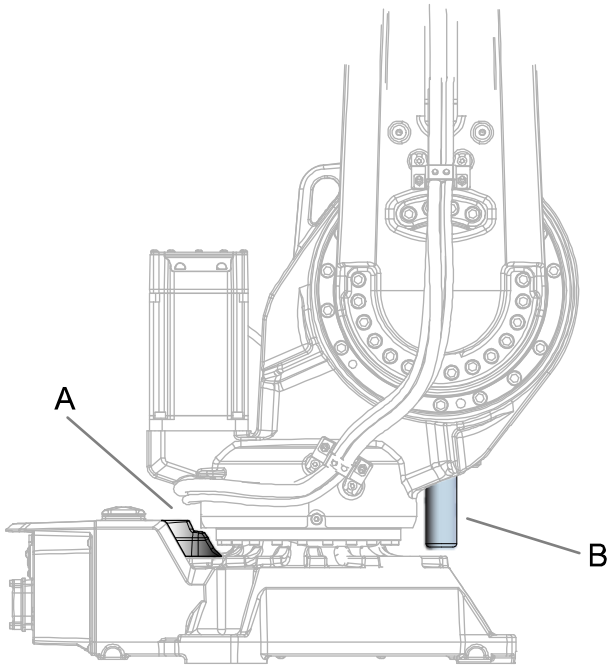

xx0800000298

A	Fixed stop
B	Mechanical stop pin, axis 1

Required equipment

Equipment	Note
Mechanical stop pin axis 1	For spare part no. see chapter Spare parts, section: • *Spare parts list, lower arm and motors on page 284*
Standard toolkit	The content is defined in the section *Standard toolkit on page 276*.
Other tools and procedures may be required. See references to these procedures in the step-by-step instructions below.	These procedures include references to the tools required.

Continues on next page

Inspection of mechanical stop pin, axis 1

Use this procedure to inspect the mechanical stop pin, axis 1.

	Action	Note
1.	**DANGER!** Turn off all electric power, hydraulic and pneumatic pressure supplies to the robot!	
2.	Regularly check that the *mechanical stop pin* is not bent or damaged in any other way.	See the figure in: • *Location of mechanical stop pin, axis 1 on page 112*
3.	**NOTE!** If the mechanical stop pin has been deformed or damaged, it must be replaced.	How to replace the stop pin is described in section: • *Replacing stop pin axis 1 on page 225*
4.	Check that the mechanical stop pin is properly attached.	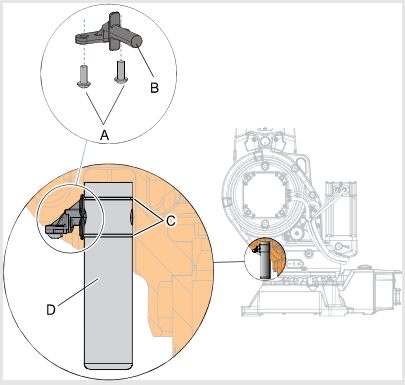 xx0800000452 Parts: • A: Attachment screws • B: Bracket • C: O-ring (2 pcs) • D: Stop pin
5.	Check that the stop pin can move freely in both directions.	

3.3.9. Inspecting additional mechanical stops

Location of additional mechanical stops

The figure shows the location of the additional stops.

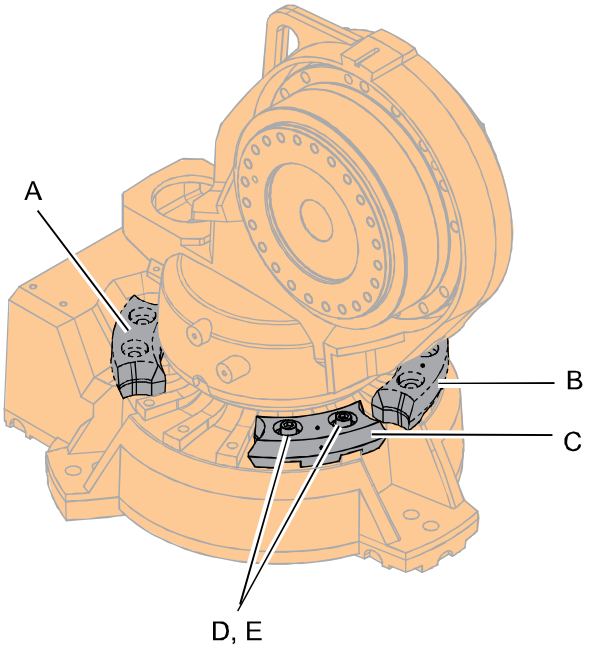

xx0800000273

A	Movable mechanical stop. Limited to -129°
B	Movable mechanical stop. Limited to +16.5°
C	Movable mechanical stop. Limited to -16.5°
D	Attachment screws
E	Washers

Required equipment

Equipment etc.	Note
Mechanical stop set, axis 1	Includes: • Stop • Attachment screws plus washers • Document for movable mechanical stop For spare part no. see chapter *Spare Parts*.
Standard toolkit	The content is defined in the section *Standard toolkit on page 276*.
Other tools and procedures may be required. See references to these procedures in the step-by-step instructions below.	These procedures include references to the tools required.

Continues on next page

Inspecting additional mechanical stops

Use this procedure to inspect the additional mechanical stops on axis 1.

	Action	Note
1.	**DANGER!** Turn off all electric power, hydraulic and pneumatic pressure supplies to the robot!	
2.	Check the *additional mechanical stops* on axis 1 for damage.	See the figure in: • *Location of additional mechanical stops on page 114*
3.	Make sure the stops are properly attached.	Tightening torque: • 82 Nm
4.	If any damage on stops or attachment screws etc. is detected, the *mechanical stops* must be replaced!	Attachment screws: • M12x40, quality 8.8-A3F • 2 pcs/stop lug

3.3.10. Inspecting dampers

Location of dampers

The figure shows the location of all dampers to be inspected.

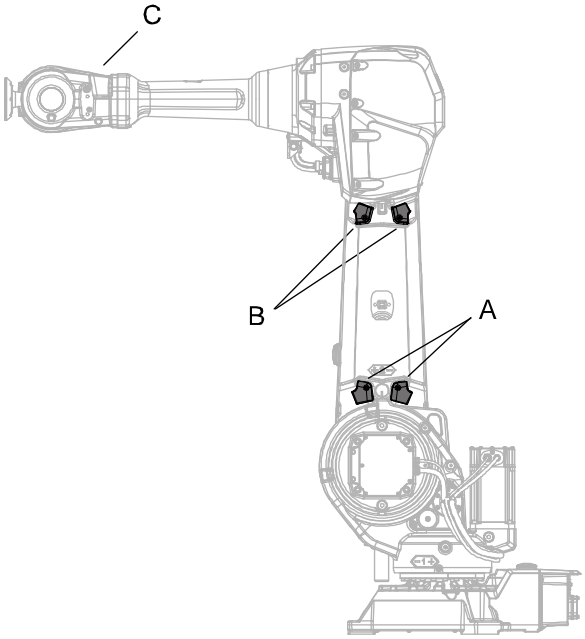

xx0800000297

A	Dampers axis 2
B	Dampers axis 3
C	Damper axis 5

Required equipment

Equipment	Note
Damper axes 2 and 3	For spare part no. see chapter Spare parts, section: • *Lower arm and motors on page 284*
Damper axis 5	For spare part no. see chapter Spare parts, section: • *Wrist unit (12/20 kgand 60kg) on page 292*
Standard toolkit	The content is defined in the section *Standard toolkit on page 276*.

Continues on next page

Inspecting dampers

Use this procedure to inspect the dampers.

NOTE!

If a damper is damaged it must be replaced!

	Action	Note
1.	**DANGER!** Turn off all electric power, hydraulic and pneumatic pressure supplies to the robot!	
2.	Check all *dampers* for damage or cracks.	See the figure in: • *Location of dampers on page 116*
3.	Check all dampers for existing impressions larger than 2-3 mm.	
4.	Check attachment screws for deformation.	
5.	If any damage is detected the damper must be replaced.	

3.3.11. Inspecting the pressure relief valve

Location of the pressure relief valve

The figure shows the location of the pressure relief valve.

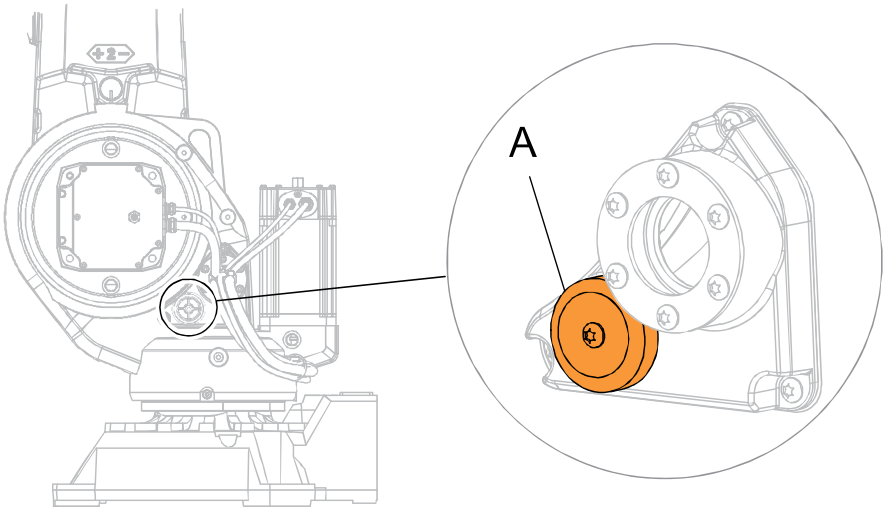

xx0900000131

A	Pressure relief valve

Required equipment

Equipment	Note
Standard toolkit	The content is defined in the section *Standard toolkit on page 276*.

Inspecting pressure relief valve

Use this procedure to inspect the pressure relief valve.

	Action	Note
1.	**DANGER!** Turn off all electric power, hydraulic and pneumatic pressure supplies to the robot!	
2.	**DANGER!** It is important to keep the pressure relief valve open and clean. If the air pressure is stopped up, too much pressure can be built up which can be hazardous.	
3.	Check if the *pressure relief valve* is not contaminated or covered with litter.	See the figure in: • *Location of the pressure relief valve on page 118*

Continues on next page

Continued

	Action	Note
4.	Clean if necessary.	**NOTE!** Use a cloth or a brush!

3.3.12. Inspecting Signal lamp (option)

Location of signal lamp

Signal lamp is an option.

Located as shown in the figure.

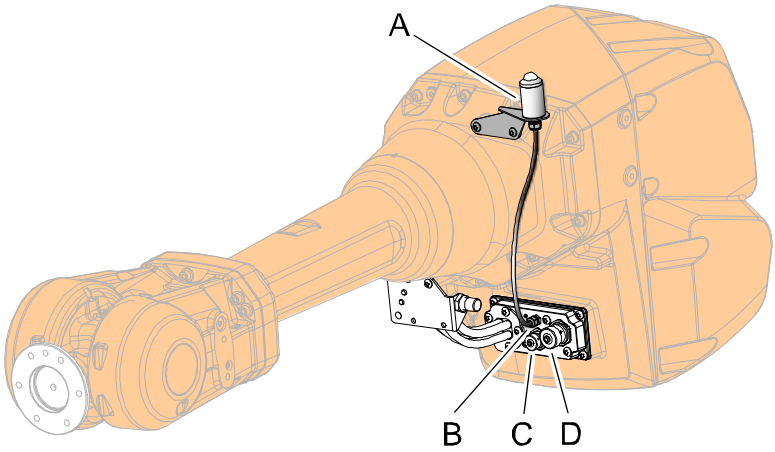

xx0800000290

A	Signal lamp
B	R3.H1 +, R3.H2 -
C	R2.CP
D	R2.CS

Required equipment

Equipment	Note
Signal lamp	For spare parts no. see chapter Spare parts, section: • *Spare parts options on page 297*
Standard toolkit	The content is defined in the section *Standard toolkit on page 276*.
Other tools and procedures may be required. See references to these procedures in the step-by-step instructions below.	These procedures include references to the tools required.

Continues on next page

Inspecting signal lamp

Use this procedure to inspect the function of the signal lamp.

NOTE!

If the signal lamp is damaged, it shall be replaced!

	Action	Note
1.	Check that the signal lamp is lit when motors are put in operation ("MOTORS ON").	
2.	If the signal lamp is not lit, continue tracing the fault with the steps below.	
3.	**DANGER!** Turn off all electric power, hydraulic and pneumatic pressure supplies to the robot!	
4.	Check whether the signal lamp is broken. If so, replace.	
5.	Check the cable connections.	
6.	Measure the voltage in connectors, motor axis 3.	24V
7.	Check the cabling. If a fault is detected, replace.	

3.4 Replacement / Changing activities

3.4.1. Type of oil, gearboxes

Introduction

In this section the type of oil in gearboxes is described. The amount for each gearbox can be found in *Type of oil and amount on page 123*.

Location of gearboxes

The figure shows the location of the gearboxes.

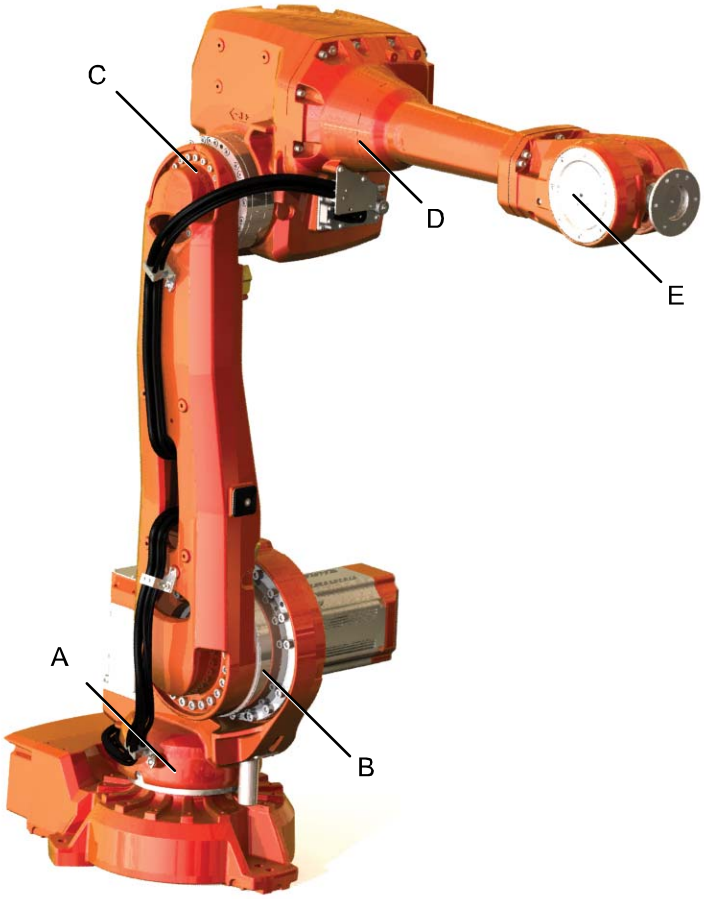

xx0800000311

The figure shows IRB 4600 (with wrist 60 kg).

A	Gearbox, axis 1
B	Gearbox, axis 2
C	Gearbox, axis 3
D	Gearbox, axis 4
E	Gearbox, axes 5-6

Continues on next page

Type of oil and amount

The table shows the type of oil that is used in gearboxes. It also shows the amount of oil in each gearbox.

Gearbox	Type of oil	Art. no.	Amount
Axis 1(floor mounted)	Kyodo Yushi TMO 150	3HAC032140-001	1,000 ml
Axis 1 (suspended mounted)	Kyodo Yushi TMO 150	3HAC032140-001	1,400 ml
Axis 2	Kyodo Yushi TMO 150	3HAC032140-001	3,000 ml
Axis 3	Kyodo Yushi TMO 150	3HAC032140-001	700 ml
Axis 4	Mobilgear XP320	11712016-604	3,000 ml
Axes 5 - 6 (Wrist 60 kg)	Optimol Optigear BM 100 (IRB 4600-60/2.05, -45/2.05. -40/2.55)	3HAC0860-1	2,000 ml
Axes 5 - 6 (Wrist 12/20 kg)	Optimol Optigear BM 100 (IRB 4600-20/2.55)	3HAC0860-1	800 ml

Oil collecting vessel

The table shows the size of the oil collecting vessels for the different gearboxes.

Gearbox	Capacity of oil collecting vessel
Axis 1	1,500 ml
Axis 2	3,500 ml
Axis 3	1,000 ml
Axis 4	3,500 ml
Axes 5-6 (Wrist 60 kg)	2,500 ml
Axes 5-6 (Wrist 12/20 kg)	1,000 ml

Equipment

Equipment	Note
Oil dispenser	Includes pump with outlet pipe. Use the suggested dispenser or a similar one: • Orion OriCan art. no. 22590 (pneumatic)
Nipple for quick connect fitting, with o-ring	Used on gearbox axis 2.
Expansion container, gearbox axis 1	Used when the robot is fitted in a suspended position.

3.4.2. Changing oil, gearbox axis 1

Location of oil plugs

The axis 1 gearbox is located between the frame and base of the robot.

The oil plug is shown in the figure.

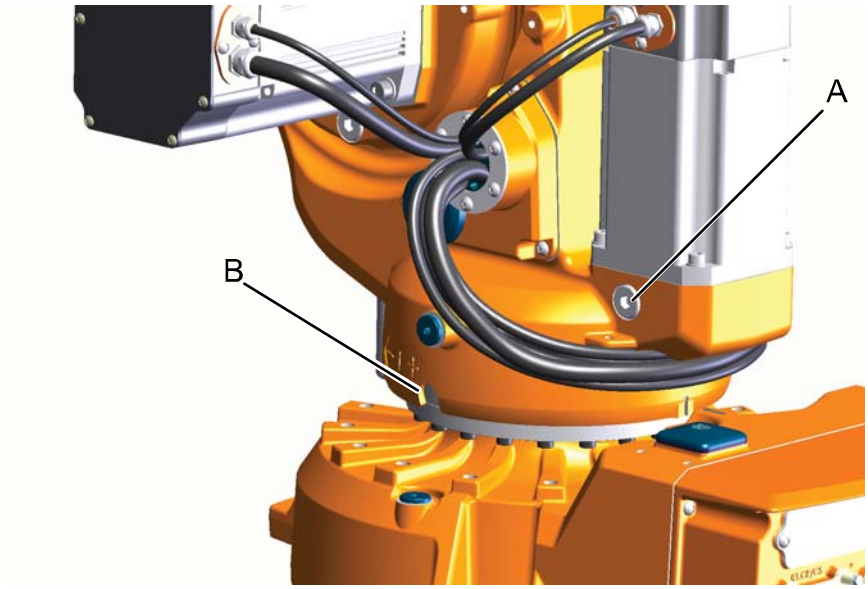

xx0800000304

A	Oil plug, filling
B	Oil plug, draining

Required equipment

Equipment	Note
Lubrication oil	The type and amount of oil in the gearbox is detailed in section: • *Type of oil, gearboxes on page 122*
Oil collecting vessel	For capacity of vessel see section: • *Type of oil, gearboxes on page 122*
Oil dispenser	One example of oil dispenser can be found in section: • *Type of oil, gearboxes on page 122*
Standard toolkit	The content is defined in the section *Standard toolkit on page 276*.

Continues on next page

Draining oil, gearbox axis 1

Use this procedure to drain oil from the gearbox.

Oil must be sucked out from the gearbox. It is recommended to use a pneumatic oil dispenser to drain oil from the gearbox.

CAUTION!

The gearbox can contain an *excess of pressure* that can be hazardous. Open the oilplug carefully in order to let out the excess pressure.

	Action	Note
1.	**DANGER!** Turn off all electric power, hydraulic and pneumatic pressure supplies to the robot!	
2.	**WARNING!** Handling gearbox oil involves several safety risks. Before proceeding, please read the safety information in the section *WARNING - Safety risks during work with gearbox lubricants (oil or grease) on page 40*.	
3.	Put an *oil collecting vessel* as close as possible to the draining hole of the gearbox.	For the capacity of vessel, see section: • *Type of oil, gearboxes on page 122*
4.	Replace *oil plug draining* quickly with a nipple (M10x1.5) where a draining hose is fitted.	See the figure in: • *Location of oil plugs on page 124* **NOTE!** Draining is time-consuming. Elapsed time varies depending on the temperature of the oil.
5.	Connect the *oil dispenser*.	One example can be found in section: • *Type of oil, gearboxes on page 122*
6.	Open the *oil plug filling*. **WARNING!** If the oil plug filling is not open when the oil dispenser is working, there is a risk of damaging vital parts in the gearbox!	See the figure in: • *Location of oil plugs on page 124*
7.	Start sucking the oil out from the gearbox with the oil ejector equipment.	

Continues on next page

Continued

	Action	Note
8.	**WARNING!** Used oil is hazardous material and must be disposed of in a safe way. See section *Decommissioning* for more information!	
9.	**NOTE!** There will be some oil left in the gearbox after draining.	
10.	Refit the *oilplugs*.	See the figure in: • *Location of oil plugs on page 124* Tightening torque: • *Oil plug filling*: 60 Nm • *Oil plug draining*: 3 Nm

Continues on next page

Filling oil, gearbox axis 1

Use this procedure to fill oil in the gearbox.

CAUTION!

The gearbox can contain an *excess of pressure* that can be hazardous. Open the oilplug carefully in order to let out the excess pressure.

	Action	Note
1.	**DANGER!** Turn off all electric power, hydraulic and pneumatic pressure supplies to the robot!	
2.	**WARNING!** Handling gearbox oil involves several safety risks. Before proceeding, please read the safety information in the section *WARNING - Safety risks during work with gearbox lubricants (oil or grease) on page 40*.	
3.	Open the *oil plug, filling*.	See the figure in; • *Location of oil plugs on page 124*
4.	Refill the gearbox with *lubrication oil*. **NOTE!** The amount of oil to be filled depends on the amount previously being drained.	The type and amount of oil in the gearbox is detailed in section: • *Type of oil, gearboxes on page 122*
5.	Inspect the oil level.	How to inspect the oil level is described in section: • *Inspecting oil level, gearbox axis 1 on page 95*
6.	Refit the *oil plug*.	Tightening torque: • 60 Nm

Continues on next page

Continued

Expansion container gearbox axis 1, suspended robot

When the robot is fitted in a suspended position, it is important to fit an expansion container for oil, on gearbox axis 1.

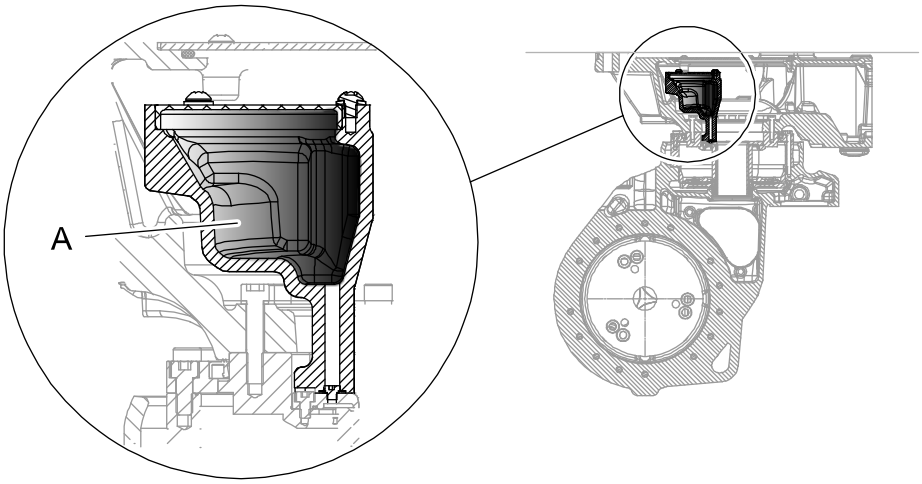

xx0900000129

A	Expansion container

NOTE!

The expansion container is delivered with the robot if ordered as option suspended/inverted. If a floor mounted robot shall be fitted in a suspended position, an expansion container must be fitted. This can be ordered from ABB. See chapter *Spare parts* section *Options on page 297*.

3.4.3. Changing oil, gearbox axis 2

Location of oil plugs

The axis 2 gearbox is located in the lower arm rotational center, underneath the motor attachment.

Oil plugs are shown in the figure.

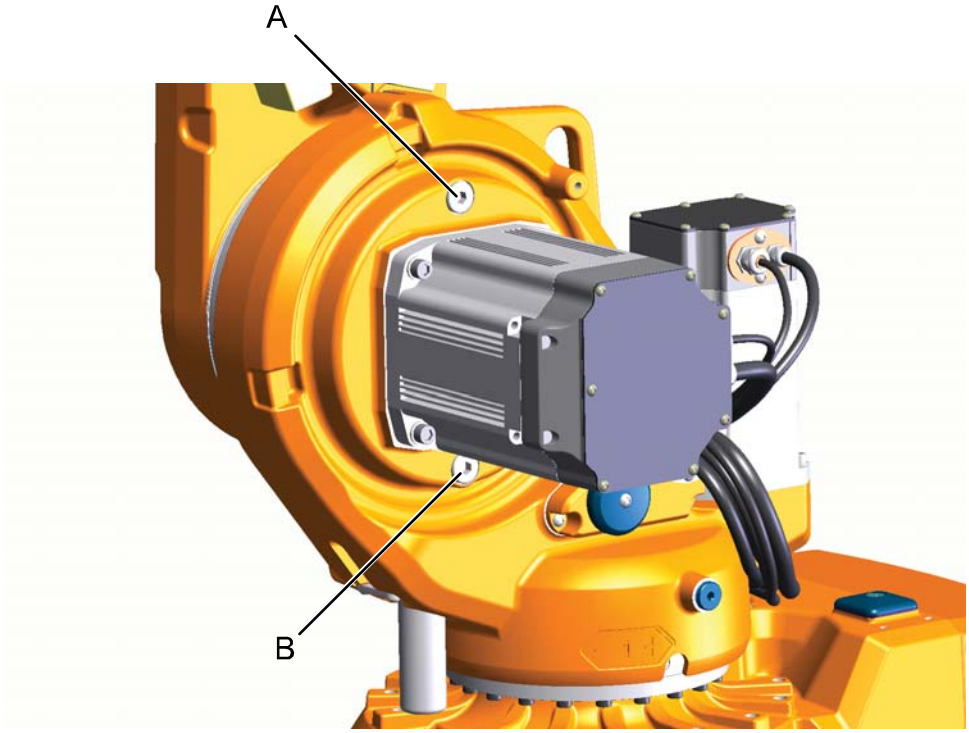

xx0800000305

A	Oil plug, filling
B	Oil plug, draining (Quick connect fitting)

Required equipment

Equipment	Note
Lubrication oil	The type and amount of oil in the gearbox is detailed in section: • *Type of oil, gearboxes on page 122*
Oil collecting vessel	The capacity of oil collecting vessel: • *Type of oil, gearboxes on page 122*
Standard toolkit	The content is defined in the section *Standard toolkit on page 276*.
Nipple (TEMA IF 3820 S06)	To be fitted on a hose, and then used for draining connected to the *quick connect fitting*. See the figure in: • *Location of oil plugs on page 129*

Continues on next page

Draining oil

Use this procedure to drain oil from the gearbox.

CAUTION!

The gearbox can contain an *excess of pressure* that can be hazardous. Open the oilplug carefully in order to let out the excess pressure.

	Action	Note
1.	**DANGER!** Turn off all electric power, hydraulic and pneumatic pressure supplies to the robot!	
2.	**WARNING!** Handling gearbox oil involves several safety risks. Before proceeding, please read the safety information in the section *WARNING - Safety risks during work with gearbox lubricants (oil or grease) on page 40*.	
3.	Either • connect a nipple to the *quick connect fitting* in the hole for draining or • remove the *quick connect fitting*.	See the figure in: • *Location of oil plugs on page 129*
4.	Open *oil plug, filling*.	See the figure in: • *Location of oil plugs on page 129* **NOTE!** Drainage will be quicker if the oil plug, filling is removed.
5.	Drain the gearbox oil using an *oil collecting vessel*.	The capacity of oil collecting vessel: • *Type of oil, gearboxes on page 122* **NOTE!** Draining is time-consuming. Elapsed time varies depending on the temperature of the oil.
6.	**WARNING!** Used oil is hazardous material and must be disposed of in a safe way. See section *Decommissioning* for more information!	

Continues on next page

	Action	Note
7.	**NOTE!** There will be some oil left in the gearbox after draining.	
8.	Refit *oil plug*.	Tightening torque: • 60 Nm

Filling oil

Use this procedure to fill oil in the gearbox.

CAUTION!

The gearbox can contain an *excess of pressure* that can be hazardous. Open the oilplug carefully in order to let out the excess pressure.

	Action	Note
1.	**DANGER!** Turn off all electric power, hydraulic and pneumatic pressure supplies to the robot!	
2.	**WARNING!** Handling gearbox oil involves several safety risks. Before proceeding, please read the safety information in the section *WARNING - Safety risks during work with gearbox lubricants (oil or grease) on page 40*.	
3.	Open *oil plug, filling*.	See the figure in: • *Location of oil plugs on page 129*
4.	Refill the gearbox with *lubrication oil*. **NOTE!** The amount of oil to be filled depends on the amount previously being drained.	The type and amount of oil in the gearbox is detailed in section: • *Type of oil, gearboxes on page 122*
5.	Inspect the oil level.	How to inspect the oil level is described in section: • *Inspecting oil level, gearbox axis 2 on page 98*
6.	Refit *oil plug*.	Tightening torque: • 60 Nm

3.4.4. Changing oil, gearbox axis 3

Location of oil plugs

The gearbox axis 3 is located in the upper arm rotational center.

The oil plug is shown in the figure.

xx0800000306

A	Oil plug, armhouse
B	Oil plug, gearbox (not visible in this figure)

Required equipment

Equipment	Note
Lubrication oil	The type and amount of oil in the gearbox is detailed in section: • *Type of oil, gearboxes on page 122*
Oil collecting vessel	The capacity of the vessel is detailed in section: • *Type of oil, gearboxes on page 122*
Oil dispenser	One example of oil dispenser can be found in section: • *Type of oil, gearboxes on page 122*
Standard toolkit	The content is defined in the section *Standard toolkit on page 276*.

Continues on next page

Draining oil

Use this procedure to drain oil from the gearbox.

There is an alternative method to drain the oil from the gearbox. See *Draining oil - alternative method on page 134*.

CAUTION!

The gearbox can contain an *excess of pressure* that can be hazardous. Open the oilplug carefully in order to let out the excess pressure.

	Action	Note
1.	Move the robot to an upright position as shown in the figure.	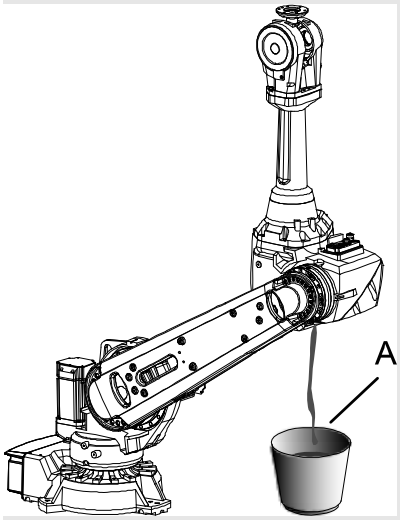 xx0800000327 • A: Oil collecting vessel
2.	**DANGER!** Turn off all electric power, hydraulic and pneumatic pressure supplies to the robot!	
3.	**WARNING!** Handling gearbox oil involves several safety risks. Before proceeding, please read the safety information in the section *WARNING - Safety risks during work with gearbox lubricants (oil or grease) on page 40*.	
4.	Open the *oil plug, armhouse*.	See the figure in: • *Location of oil plugs on page 132*
5.	Open the *oil plug, gearbox* and use it as a ventilation hole.	See the figure in: • *Location of oil plugs on page 132*

Continues on next page

Continued

	Action	Note
6.	Drain the gearbox oil using an *oil collecting vessel*.	For the capacity of the vessel, see section: • *Type of oil, gearboxes on page 122* **NOTE!** Draining is time-consuming. Elapsed time varies depending on the temperature of the oil.
7.	**WARNING!** Used oil is hazardous material and must be disposed of in a proper way. See section *Decommissioning* for more information.	

Draining oil - alternative method

Use this procedure to drain the oil from the gearbox, as an alternative method.

If this method is used, oil must be sucked out of the gearbox using an oil dispenser.

CAUTION!

The gearbox can contain an *excess of pressure* that can be hazardous. Open the oilplug carefully in order to let out the excess pressure.

	Action	Note
1.	Move the upper arm of the robot to a position where the *oil plug, gearbox* is pointing at the floor.	See the figure in: • *Location of oil plugs on page 132*
2.	**DANGER!** Turn off all electric power, hydraulic and pneumatic pressure supplies to the robot!	
3.	Use an *oil dispenser* fitted to the *oil plug, gearbox* to drain the oil.	An example of oil dispenser is detailed in section: • *Type of oil, gearboxes on page 122* See the figure in: • *Location of oil plugs on page 132*
4.	Replace the *oil plug, gearbox* with a nipple where a draining hose is fitted.	See the figure in: • *Location of oil plugs on page 132*

Continues on next page

Continued

	Action	Note
5.	Connect the *oil dispenser*.	One example can be found in section: • *Type of oil, gearboxes on page 122*
6.	Open the *oil plug, armhouse* now pointing upwards and use it as a ventilation hole.	See the figure in: • *Location of oil plugs on page 132* **WARNING!** The oil plug, gearbox must be open when the oil dispenser equipment is used! Otherwise sealings and other parts will be damaged.
7.	Start sucking the oil out from the gearbox with the oil ejector equipment.	For capacity of the vessel see section: • *Type of oil, gearboxes on page 122*
8.	**WARNING!** Used oil is hazardous material and must be disposed of in a proper way. See section *Decommissioning* for more information.	
9.	**NOTE!** There will be some oil left in the gearbox after draining!	
10.	Refit the *oilplugs*.	See the figure in: • *Location of oil plugs on page 132* Tightening torque: • Oil plug armhouse: 10 Nm • Oil plug gearbox: 3 Nm

Continues on next page

Filling oil

Use this procedure to fill oil in the gearbox.

CAUTION!

The gearbox can contain an *excess of pressure* that can be hazardous. Open the oilplug carefully in order to let out the excess pressure.

	Action	Note
1.	Move the upper arm to a position where the wrist is pointing towards the floor as shown in the figure.	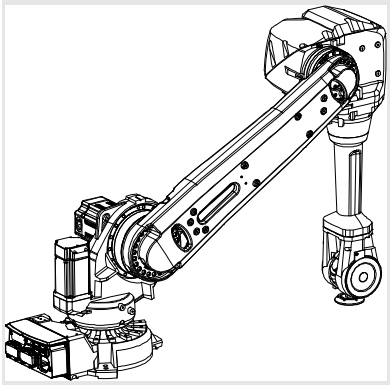 xx0800000329
2.	**DANGER!** Turn off all electric power, hydraulic and pneumatic pressure supplies to the robot!	
3.	**WARNING!** Handling gearbox oil involves several safety risks. Before proceeding, please read the safety information in the section *WARNING - Safety risks during work with gearbox lubricants (oil or grease) on page 40*.	
4.	Open the *oil plug, armhouse*.	See the figure in: • *Location of oil plugs on page 132*
5.	Refill the gearbox with *lubrication oil*. **NOTE!** The amount of oil to be filled depends on the amount previously being drained.	The type and amount of oil in the gearbox is detailed in section: • *Type of oil, gearboxes on page 122*
6.	Inspect the *oil level*.	How to inspect oil is described in section: • *Inspecting oil level, gearbox axis 3 on page 100*

Continues on next page

Continued

	Action	Note
7.	Refit *oil plug*.	Tightening torque: • 10 Nm

3.4.5. Changing oil, gearbox axis 4

Location of oil plugs

The gearbox axis 4 is located in the front of the upper armhouse.

The oil plug is shown in the figure.

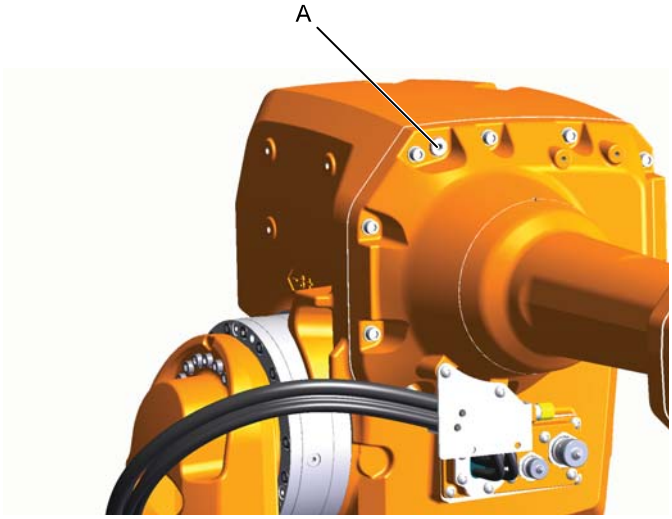

xx0800000307

A	Oil plug, for filling and draining

Required equipment

Equipment	Note
Lubrication oil	The type and amount of oil in the gearbox is detailed in section: • *Type of oil, gearboxes on page 122*
Oil collecting vessel	For capacity of the vessel, see section: • *Type of oil, gearboxes on page 122*
Standard toolkit	The content is defined in the section *Standard toolkit on page 276*.

Continues on next page

Draining oil

Use this procedure to drain oil from the gearbox.

CAUTION!

The gearbox can contain an *excess of pressure* that can be hazardous. Open the oilplug carefully in order to let out the excess pressure.

	Action	Note
1.	Move the robot to the position shown in the figure.	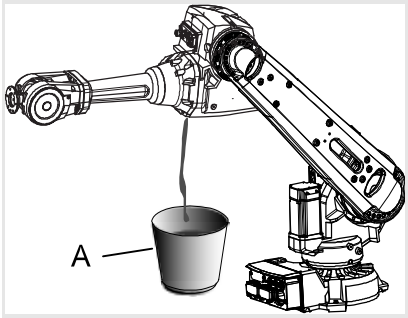 xx0800000328 • A: Oil collecting vessel
2.	**DANGER!** Turn off all electric power, hydraulic and pneumatic pressure supplies to the robot!	
3.	**WARNING!** Handling gearbox oil involves several safety risks. Before proceeding, please read the safety information in the section *WARNING - Safety risks during work with gearbox lubricants (oil or grease) on page 40*.	
4.	Open *oil plug, draining*.	See the figure in: • *Location of oil plugs on page 138*
5.	Drain the gearbox oil using an *oil collecting vessel*.	For capacity of the vessel, see section: • *Type of oil, gearboxes on page 122* **NOTE!** Draining is time-consuming. Elapsed time varies depending on the temperature of the oil.

Continues on next page

Continued

	Action	Note
6.	**WARNING!** Used oil is hazardous material and must be disposed of in a safe way. See section *Decommissioning* for more information!	

Filling oil

Use this procedure to fill oil in the gearbox.

CAUTION!

The gearbox can contain an *excess of pressure* that can be hazardous. Open the oilplug carefully in order to let out the excess pressure.

	Action	Note
1.	Move the upper arm to the position shown in the figure.	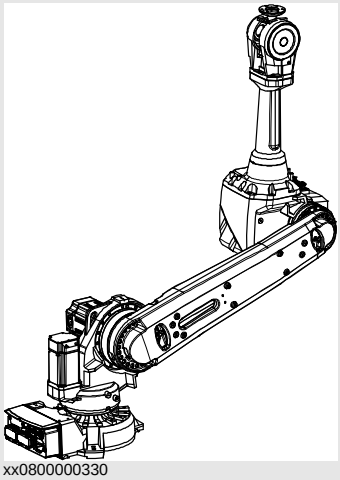 xx0800000330
2.	**DANGER!** Turn off all electric power, hydraulic and pneumatic pressure supplies to the robot!	
3.	**WARNING!** Handling gearbox oil involves several safety risks. Before proceeding, please read the safety information in the section *WARNING - Safety risks during work with gearbox lubricants (oil or grease) on page 40*.	
4.	Open *oil plug, filling*.	See the figure in: • *Location of oil plugs on page 138*

Continues on next page

Continued

	Action	Note
5.	Refill the gearbox with *lubrication oil*. **NOTE!** The amount of oil to be filled depends on the amount previously being drained.	The type and amount of oil in the gearbox is detailed in section: • *Location of gearboxes on page 122*
6.	Refit *oil plug*.	Tightening torque: • 10 Nm

3.4.6. Changing oil, gearbox axes 5 and 6

Location of oil plugs

The gearbox axes 5 and 6 is located in the wrist unit.

The oil plug is shown in the figure.

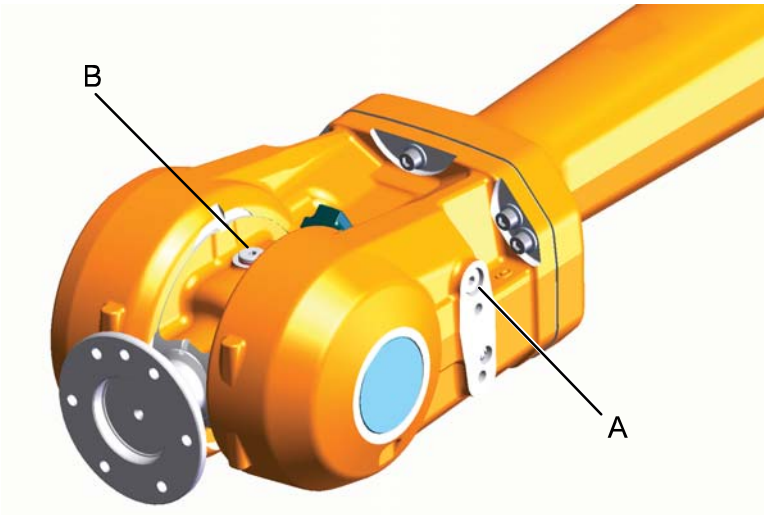

xx0800000308

The figure shows wrist variant 60 kg

A	Oil plug, wrist
B	Oil plug, tilthouse

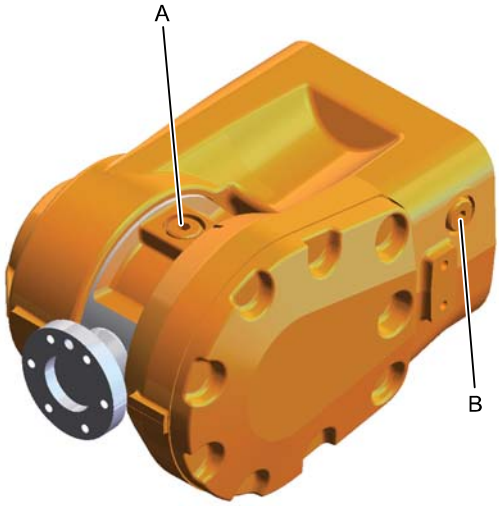

xx0900000139

The figure shows wrist variant 12/20 kg

A	Oil plug, draining
B	Oil plug (air inlet when draining oil)

NOTE!

The gearbox for axes 5 and 6 is the same.

Continues on next page

Required equipment

Equipment	Note
Lubrication oil	The type and amount of oil in the gearbox is detailed in section • *Type of oil, gearboxes on page 122*
Oil collecting vessel	For capacity of the vessel, see section: • *Type of oil, gearboxes on page 122*
Standard toolkit	The content is defined in the section *Special tools on page 277*.

Draining gearbox 5-6 - wrist 60 kg

Use this procedure to drain oil from the gearbox.

CAUTION!

The gearbox can contain an *excess of pressure* that can be hazardous. Open the oilplug carefully in order to let out the excess pressure.

	Action	Note
1.	Move the *upper arm* to a position where it is pointing downwards.	
2.	Move axis 5 to a position where the *oil plug, tilthouse* is pointing downwards.	The turning disk shall be in a horisontal position.
3.	**DANGER!** Turn off all electric power, hydraulic and pneumatic pressure supplies to the robot!	
4.	**WARNING!** Handling gearbox oil involves several safety risks. Before proceeding, please read the safety information in the section *WARNING - Safety risks during work with gearbox lubricants (oil or grease) on page 40*.	
5.	Put an *oil collecting vessel* under the wrist in order to collect drained oil.	For capacity of the vessel, see section: • *Type of oil, gearboxes on page 122*
6.	Open the *oil plug tilthouse*.	See the figure in: • *Location of oil plugs on page 142*
7.	Open *oil plug, wrist*. This is done for the ventilation of the gearbox and to fascilitate draining.	See the figure in: • *Location of oil plugs on page 142*

Continues on next page

Continued

	Action	Note
8.	Drain the gearbox oil.	**NOTE!** Draining is time-consuming. Elapsed time varies depending on the temperature of the oil.
9.	**WARNING!** Used oil is hazardous material and must be disposed of in a safe way. See section *Decommissioning* for more information!	

Draining gearbox 5-6 - wrist 12/20 kg

Use this procedure to drain oil from the gearbox.

CAUTION!

The gearbox can contain an *excess of pressure* that can be hazardous. Open the oilplug carefully in order to let out the excess pressure.

	Action	Note
1.	Move the upper arm to a horizontal position.	
2.	Turn axis 4 to the calibration position.	
3.	**DANGER!** Turn off all electric power, hydraulic and pneumatic pressure supplies to the robot!	
4.	**WARNING!** Handling gearbox oil involves several safety risks. Before proceeding, please read the safety information in the section *WARNING - Safety risks during work with gearbox lubricants (oil or grease) on page 40*.	
5.	Remove the *oil plugs* in the wrist.	See the figure in: • *Location of oil plugs on page 142*
6.	Turn axis 4 through 90° so the oil plug on the side of the wrist is pointings downwards.	
7.	The turn axis 4 another 90°.	
8.	Let the remaining oil run out through the hole on the tilt house.	

Continues on next page

Filling oil gearbox 5-6 - wrist 60 kg

Use this procedure to fill oil in the gearbox.

CAUTION!

The gearbox can contain an *excess of pressure* that can be hazardous. Open the oilplug carefully in order to let out the excess pressure.

	Action	Note
1.	Move the upper arm to a position where the *oil plug, wrist* is pointing upwards.	See the figure in: • *Location of oil plugs on page 142*
2.	Move axis 5 to a position where the *oil plug, tilthouse* is pointing upwards.	See the figure in: • *Location of oil plugs on page 142*
3.	**DANGER!** Turn off all electric power, hydraulic and pneumatic pressure supplies to the robot!	
4.	**WARNING!** Handling gearbox oil involves several safety risks. Before proceeding, please read the safety information in the section *WARNING - Safety risks during work with gearbox lubricants (oil or grease) on page 40*.	
5.	Open *oil plug, wrist*.	See the figure in: • *Location of oil plugs on page 142*
6.	Open *oil plug, tilthouse*.	See the figure in: • *Location of oil plugs on page 142*
7.	Refill oil using *oil plug, wrist*. **NOTE!** There will be some oil left in the gearbox after draining.	There will be oil left in the gearbox after draining. Therefore the amount of oil filled will be less than the amount stated in section: • *Type of oil, gearboxes on page 122* When filling oil in a wrist (60 kg) begin by only filling 1.500 ml. Check oil level. If needed add more oil.
8.	Refill the gearbox with *lubrication oil*. **NOTE!** The amount of oil to be filled depends on the amount previously being drained.	The type and amount of oil in the gearbox is detailed in section: • *Type of oil, gearboxes on page 122*
9.	Inspect the *oil level*.	How to inspect the oil level is described in section: • *Inspecting oil level, gearbox axes 5 - 6 on page 104*

Continues on next page

	Action	Note
10.	Refit both oil plugs.	Tightening torque: • 10 Nm

Filling oil gearbox 5-6 - wrist 12/20 kg

Use this procedure to fill oil in the gearbox.

CAUTION!

The gearbox can contain an *excess of pressure* that can be hazardous. Open the oilplug carefully in order to let out the excess pressure.

	Action	Note
1.	Run the upper arm to a horizontal position.	
2.	Turn axis 4 to the calibration position.	
3.	**DANGER!** Turn off all electric power, hydraulic and pneumatic pressure supplies to the robot!	
4.	**WARNING!** Handling gearbox oil involves several safety risks. Before proceeding, please read the safety information in the section *WARNING - Safety risks during work with gearbox lubricants (oil or grease) on page 40*.	
5.	Fill oil in the hole located on the tilthouse until the oil reaches up to the hole located on the side of the wrist.	
6.	**NOTE!** If the robot is fitted in a suspended position, the wrist should be turned 180°.	
7.	Refit the oil plugs.	Tightening torque: • 10 Nm

3.4.7. Replacing SMB battery

NOTE!

The lifetime of the SMB lithium battery can be extended significantly during a production break. In order to extend the lifetime of the battery during a production break, activate sleep mode in IRC5 by a service routine that is described in the *Operating manual - IRC5 with the FlexPendant*, chapter *Battery shutdown service routine*.

Location of SMB battery

The SMB battery is located at the base of the robot, as shown in the figure.

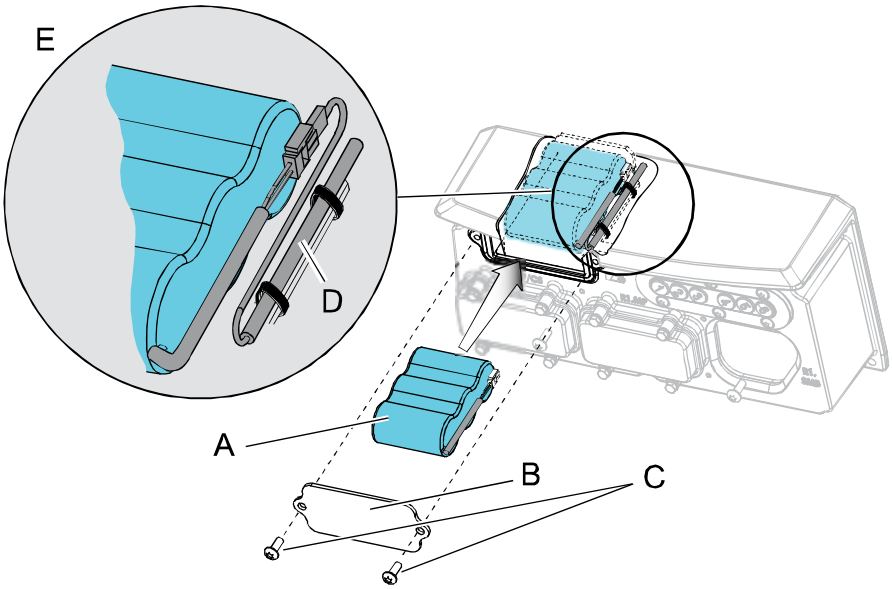

xx0800000322

A	SMB battery
B	Battery cover
C	Attachment screws
D	SMB battery cable
E	How to arrange the battery cable

Required equipment

Equipment	Note
SMB battery pack	Battery includes protection circuits. Replace it only with given spare part no. or an ABB approved equivalent. See *Spare parts* for spare part no.
Standard toolkit	The content is defined in the section *Standard toolkit on page 276*.
Circuit diagram	See the chapter *Circuit diagram*.

Continues on next page

Removing SMB battery

Use this procedure to remove the SMB battery.

	Action	Note
1.	Move the robot to its calibration position.	This is done in order to facilitate the updating of the revolution counter.
2.	**DANGER!** Turn off all electric power, hydraulic and pneumatic pressure supplies to the robot!	
3.	esd **WARNING!** The unit is sensitive to ESD. Before handling the unit please read the safety information in the section *WARNING - The unit is sensitive to ESD! on page 39*	
4.	Remove the *SMB battery cover*.	See the figure in *Location of SMB battery on page 147*.
5.	Pull out the *SMB battery*.	See the figure in *Location of SMB battery on page 147*.
6.	Disconnect the *battery cable* and remove the battery.	See the figure in *Location of SMB battery on page 147*.
7.	How to dispose of the used SMB battery, see chapter *Decommissioning*.	

Continues on next page

Refitting SMB battery

Use this procedure to refit the SMB battery.

	Action	Note
1.	**DANGER!** Turn off all electric power, hydraulic and pneumatic pressure supplies to the robot!	
2.	esd **WARNING!** The unit is sensitive to ESD. Before handling the unit please read the safety information in the section *WARNING - The unit is sensitive to ESD! on page 39*	
3.	Reconnect the *battery cable* to the *SMB battery*.	See the figure in *Location of SMB battery on page 147*.
4.	Put the battery unit into its recess while arranging the SMB cables as shown in the figure.	See the figure in *Location of SMB battery on page 147*.
5.	Secure the *SMB cover* with its *attachment screws*.	See the figure in *Location of SMB battery on page 147*.
6.	Update the revolution counter.	Detailed in chapter *Calibration - Updating the revolution counters.*
7.	**DANGER!** Make sure all safety requirements are met when performing the first test run. These are further detailed in the section *DANGER - First test run may cause injury or damage! on page 37*.	

3.5 Cleaning activities

3.5.1. Cleaning, robot

WARNING!

Turn off all electrical power supplies to the robot before entering the robot work space!

General

To secure high uptime it is important that the robot is cleaned regularly. The frequency of cleaning depends on the environment that the robot is working in.

Depending on the protection of the robot, different methods of cleaning of the robot are allowed. This section describes how to clean a robot with protection *Standard* and *Foundry Plus*.

NOTE!

Always check the serial number sign for verification about the robot protection class.

Cleaning Activities

This instruction specifies allowed cleaning methods for each protection class.

Cleaning Method	Standard	Foundry Plus
Vacuum cleaner.	Yes.	Yes.
Wipe with cloth.	Yes. With light cleaning detergent.	Yes. With light cleaning detergent or spirit.
Rinse with water.	Yes. It is highly recommended that water contains a rust prevention solution and that the robot is dried afterwards.	Yes. It is highly recommended that water contains a rust prevention solution.
High pressure water or steam according to chapter Cleaning with water and steam below.	No.	Yes. It is highly recommended that water and steam contains rust preventive, without cleaning detergents.

Cleaning with water and steam

Cleaning methods that can be used for ABB robots with protection *Standard*, *Foundry Plus*, *Wash*, *Foundry Prime*.

Equipment, etc.	Note
Vacuum cleaner	
Cloth with mild detergent	

Continues on next page

Equipment, etc.	Note
Water cleaner	• Max. water pressure at the nozzel: 700 kN/m ^{2} (7 bar) (1) • Fan jet nozzle should be used, min. 45° spread • Distance from nozzle to encapsulation: min. 0.4 m • Flow: max. 20 liters/min (1).
Steam cleaner	• Water pressure at nozzle: max. 2,500 kN/m ^{2} (25 bar) • Type of nozzle: fan jet, min. 45° spread • Distance from nozzle to encapsulation: min. 0.4 m • Water temperature: max. 80° C

1) Typical tap water pressure and flow

Cables

Movable cables need to be able to move freely:

- Remove waste material, for example sand, dust, and chips, if it prevents cable movement.
- Clean the cables if they have a crusty surface for example from dry release agents.

Do's and don'ts!

The section below specifies some special considerations when cleaning the robot.

Always!

- Always use cleaning equipment as specified above! Any other cleaning equipment may shorten the life of the robot.
- Always check that all protective covers are fitted to the robot before cleaning!

Never!

- Never point the water jet at connectors, joints, sealings or gaskets!
- Never use compressed air to clean the robot!
- Never use solvents that are not approved by ABB to clean the robot!
- Never spray from a distance closer then 0.4m!
- Never remove any covers or other protective devices before cleaning the robot!

4 Repair

4.1. Introduction

Structure of this chapter

This chapter details all repair activities recommended for the robot and any external units of the robot.

It is made up of separate procedures, each detailing a specific repair activity. Each procedure contains all the information required to perform the activity, for example spare parts numbers, required special tools and materials.

The procedures are gathered in sections, divided according to the component location on the robot.

Required equipment

All equipment required to perform a specific repair activity is listed together with the current procedure.

The equipment is also gathered in different lists in chapter *Reference information*.

Safety information

Before any service work is commenced, it is extremely important that all safety information is read!

There are general safety aspects that must be read through, as well as more specific safety information that describes the danger and safety risks when performing specific steps in a procedure. Make sure to read through the chapter *Safety on page 13* before commencing any service work.

NOTE!

If the robot is connected to power, always make sure that the robot is connected to *earth* before starting any repair work!

See *Product manual IRC5*.

4.2 General procedures

4.2.1. Performing a leak-down test

General

After refitting any motor and gearbox, the integrity of all seals enclosing the gearbox oil must be tested. This is done in a leak-down test.

Required equipment

Equipment, etc.	Art. no.
Leakdown tester	3HAC0207-1
Leak detection spray	-

Procedure

	Action	Note
1.	Finish the refitting procedure of the motor or gear in question.	
2.	Remove the topmost oil plug on the gear in question and replace it with the *leakdown tester*. Adapters, which are included in the leakdown tester kit, may be required.	Art. no. is specified in *Required equipment on page 154*.
3.	Apply compressed air and raise the pressure with the knob until the correct value is shown on the manometer.	Recommended value: 0.2 - 0.25 bar (20 - 25 kPa)
4.	Disconnect the compressed air supply.	
5.	Wait for approx. 8-10 minutes. No pressure loss may be detected.	If the compressed air is significantly colder or warmer than the gearbox to be tested, a slight pressure increase or decrease may occur. This is quite normal.
6.	Was any pressure drop evident? Localize the leak as detailed below. Remove the leakdown tester and refit the oil plug. The test is complete.	
7.	Spray suspected leak areas with *leak detection spray*. Bubbles indicate a leak.	
8.	When the leak has been localized, take the necessary measures to correct the leak.	

4.2.2. Mounting instructions for bearings

General

This section details how to mount and grease different types of bearings on the robot.

Equipment

Equipment, etc.	Art. no.	Note
Grease	3HAB3537-1	Used to grease the bearings, if not specified otherwise.

Assembly of all bearings

Follow the instructions below when mounting a bearing on the robot.

	Action	Note
1.	To avoid contamination, let a new bearing remain in its wrapping until it is time for fitting.	
2.	Ensure that all parts included in the bearing fitting are free from burrs, grinding waste and other contamination. Cast components must be free from foundry sand.	
3.	Bearing rings, inner rings and roller elements must under no circumstances be subjected to direct impact. Furthermore, the roller elements must not be exposed to any stresses during the assembly work.	

Assembly of tapered bearings

Follow the previous instructions for assembly of all bearings when mounting a tapered bearing on the robot.

In addition to those instructions, the procedure below must be carried out to enable the roller elements to adjust to the correct position against the race flange.

	Action	Note
1.	Tension the bearing gradually until the recommended pre-tension is achieved. **NOTE!** The roller elements must be rotated a specified number of turns before pre-tensioning is carried out and also rotated during the pre-tensioning sequence.	
2.	Make sure the bearing is properly aligned as this will directly affect the lifespan of the bearing.	

Continues on next page

Continued

Greasing of bearings

The bearings must be greased after assembly in accordance to the instructions below:

- The bearings must not be completely filled with grease. However, if space is available beside the bearing fitting, the bearing may be totally filled with grease when mounted, as excessive grease will be pressed out from the bearing when the robot is started.
- During operation, the bearing should be filled to 70-80% of the available volume.
- Ensure that grease is handled and stored properly to avoid contamination.

Grease the different types of bearings as detailed below:

- *Grooved ball bearings* must be filled with grease from both sides.
- *Tapered roller bearings* and axial needle bearings must be greased in the split condition.

4.2.3. Mounting instructions for seals

General

This section details how to mount different types of seals onto the robot.

Equipment

Equipment, etc.	Art. no.	Note
Grease	3HAB3537-1	Used to lubricate the seals.

Rotating seals

The procedure below details how to fit rotating seals.

CAUTION!

Please observe the following before commencing any assembly of seals:

- Protect the sealing surfaces during transport and mounting.
- Keep the seal in its original wrappings or protect it well before actual mounting.
- The fitting of seals and gears must be carried out on clean workbenches.
- Use a protective sleeve for the sealing lip during mounting, when sliding over threads, keyways, etc.

	Action	Note
1.	Check the seal to ensure that: • the seal is of the correct type (provided with cutting edge). • there is no damage to the sealing edge (feel with a fingernail).	
2.	Inspect the sealing surface before mounting. If scratches or damage are found, the seal must be replaced since it may result in future leakage.	
3.	Lubricate the seal with *grease* just before fitting. (Not too early - there is a risk of dirt and foreign particles adhering to the seal.) Fill 2/3 of the space between the dust tongue and sealing lip with grease. The rubber coated external diameter must also be greased, unless otherwise specified.	Art. no. is specified in *Equipment on page 157*.
4.	Mount the seal correctly with a mounting tool. Never hammer directly on the seal as this may result in leakage.	

Continues on next page

Flange seals and static seals

The procedure below details how to fit flange seals and static seals.

	Action
1.	Check the flange surfaces. They must be even and free from pores. It is easy to check flatness using a gauge on the fastened joint (without sealing compound). If the flange surfaces are defective, the parts may not be used because leakage could occur.
2.	Clean the surfaces properly and in accordance with ABB recommendations.
3.	Distribute the sealing compound evenly over the surface, preferably with a brush.
4.	Tighten the screws evenly when fastening the flange joint.

O-rings

The procedure below details how to fit o-rings.

	Action	Note
1.	Ensure that the correct o-ring size is used.	
2.	Check the o-ring for surface defects, burrs, shape accuracy, etc.	Defective o-rings may not be used.
3.	Check the o-ring grooves. The grooves must be geometrically correct and free from pores and contamination.	Defective o-rings may not be used.
4.	Lubricate the o-ring with grease.	
5.	Tighten the screws evenly when assembling.	

4.3 Complete robot

4.3.1. Removing the complete cable harness

Introduction

This procedure describes how to remove the complete cable harness.

How to refit the cable harness is described in section *Refitting the complete cable harness on page 169*.

The removal procedure is presented in the order the work is recommended to be performed. Therefore the order is different in the two procedures removal and refitting of the cable harness. Cross references will make it easy to find what is needed to know as the work continues.

The section *Removing the complete cable harness* consists of the following parts presented in the order the work is recommended to be performed:

- Removal in the *base* *Removing cable harness in base on page 162*
- Removal in the *frame* *Removing cable harness in frame on page 166*
- Removal in *lower arm* and *armhouse* *Removing cable harness in lower arm and armhouse on page 167*.

How to replace the SMB unit, brake release unit and motors can be found in:

- SMB unit *Removing the SMB unit on page 183*
- Brake release unit *Removing the brake release unit on page 189*
- Motors *Removing motors on page 228*

Continues on next page

Location of the cable harness

The location of the cable harness in the base, frame and lower arm is shown in the figures.

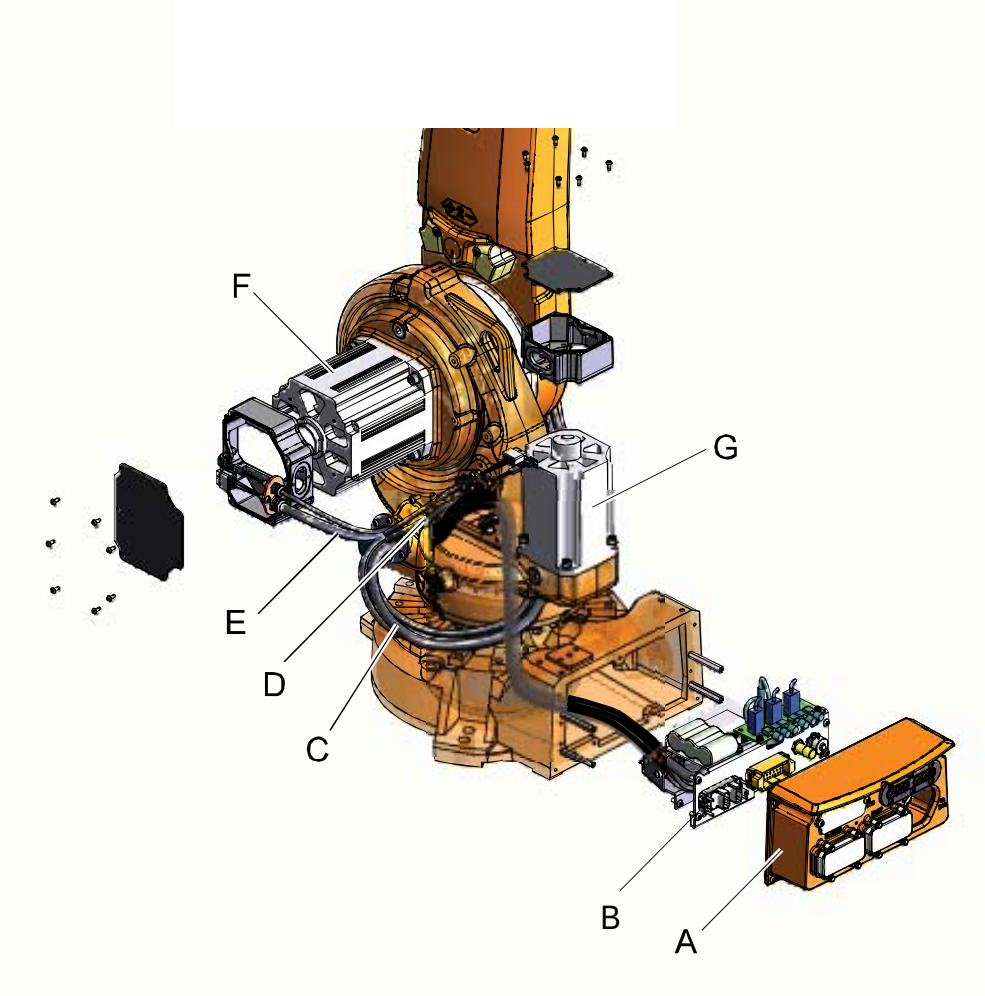

xx0900000009

Cable harness, base and frame.

A	Cover base
B	Bracket
C	Cable harness
D	Motor cable, axis 1
E	Motor cable, axis 2
F	Motor, axis 2
G	Motor, axis 1

Continues on next page

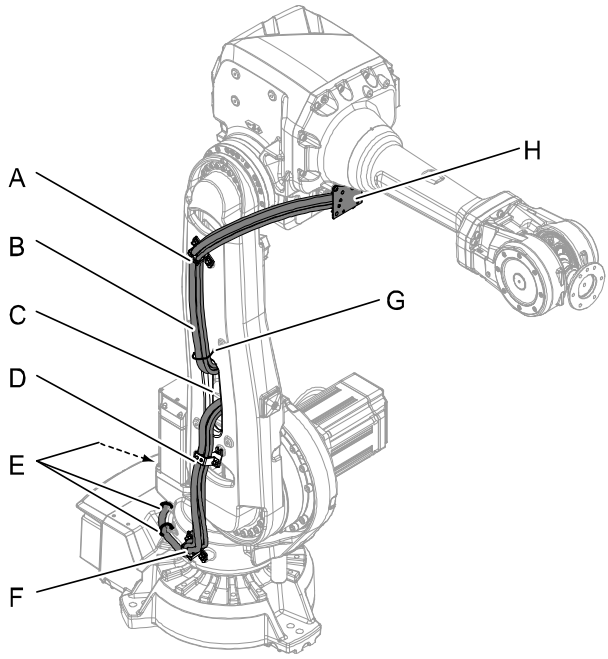

xx0900000012

Cable harness, lower arm.

A	Bracket, lower arm
B	Cable harness
C	Hole in lower arm
D	Bracket, lower arm
E	Cable straps, one not visible here (steel)
F	Bracket, frame
G	Cable strap, lower arm (plastic)
H	Bracket, armhouse

Required equipment

Equipment	Note
Standard toolkit	The content is defined in the section *Standard toolkit on page 276*.
Other tools and procedures may be required. See references to these procedures in the step-by-step instructions below.	These procedures include references to the tools required.

Continues on next page

Removing cable harness in base

Use this procedure to remove the cable harness in the base.

	Action	Note
1.	**DANGER!** Turn off all electric power, hydraulic and pneumatic pressure supplies to the robot!	
2.	Disconnect contacts and air connection on the *cover base*: • R1.CP/CS • R1.MP • R1.SMB • Air connection • Position of R1.CBUS (if used)	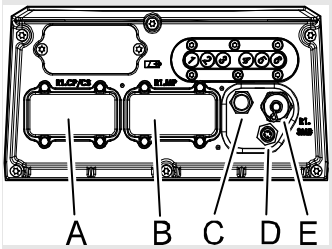 xx0900000014 Parts: • A: R1.CP/CS • B: R1.MP • C: Air connection • D: Position of R1.CBUS (if used) • E: R1.SMB
3.	Remove the *cover base*.	See the figure in: • *Location of the cable harness on page 160* (Cable harness, base and frame)
4.	Disconnect contacts on the brake release unit: • X8 • X9 • X10	
5.	Cut the *cable straps* securing the battery cable. **TIP!** Do not disconnect the battery cable! If the battery is kept connected to the SMB unit, the calibration of the robot will still be intact. If the connection has been broken, recalibration is necessary!	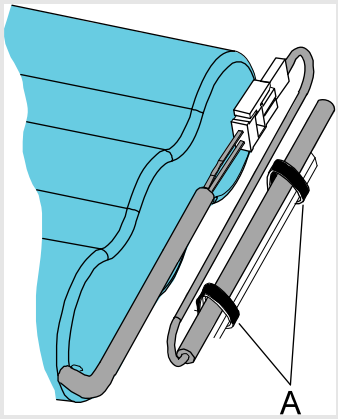 xx0900000099 Parts: • A: Cable straps (2 pcs)

Continues on next page

Continued

	Action	Note
6.	Remove one screw securing the bracket and loosen the three other screws.	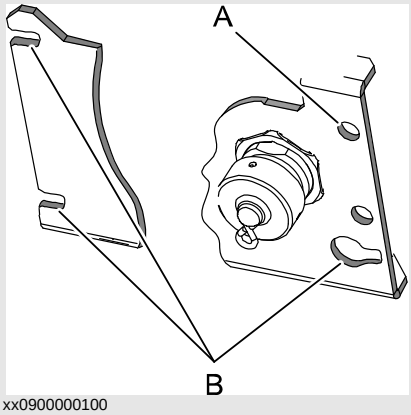 xx0900000100 Parts: • A: Screw to be removed • B: Screws to be loosened (3 pcs)
7.	Remove the *bracket* by sliding it off the remaining three attachment screws and put it at a 90° angle from the base. Putting the bracket at a 90° angle facilitates the disconnecting of cables from the bracket. **NOTE!** This procedure must be performed carefully in order not to damage cables or other components!	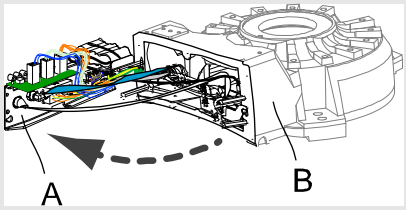 xx0900000013 Parts: • A: Bracket at a 90° angle • B: Base
8.	Disconnect contacts and air connection on the *bracket*: • R1.CP/CS • R1.MP • R1.SMB • Air connection • Position of R1.CBUS (if used)	See the figure in: • *Location of the cable harness on page 160*
9.	Remove the *SMB unit* from its attachment screws. Leave the screws in the base.	How to remove the *SMB unit* is described in section: • *Removing the SMB unit on page 183*
10.	Disconnect contacts on the SMB unit: • R1.SMB1-2 • R1.SMB2-6 • R2.SMB	

Continues on next page

4.3.1. Removing the complete cable harness

Continued

	Action	Note
11.	Disconnect the *screen connections* of: • R1.SMB1-2 • R1.SMB2-6	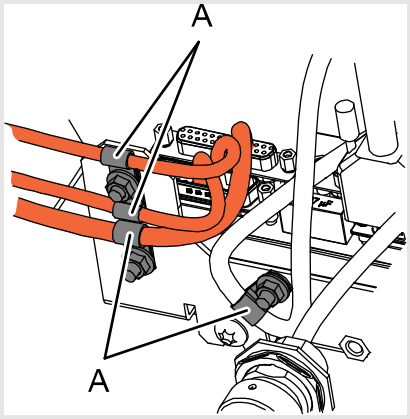 xx0900000097 Parts: • A: Screen connection (4 pcs)
12.	Disconnect the *earth cables*.	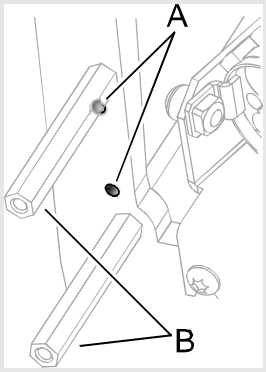 xx0800000015 Parts: • A: Earth • B: Distance screws

Continues on next page

Continued

	Action	Note
13.	Remove the *bracket* securing the cable package inside the base on the left side.	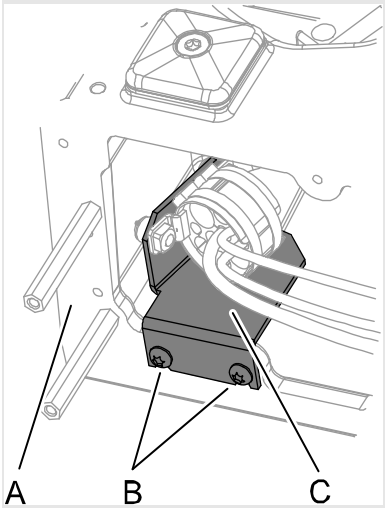 xx0900000018 Parts: • A: Base • B: Attachment screws • C: Bracket
14.	Continue removal of the cable package from the frame.	How to remove the cable package from the frame is described in section • *Removing cable harness in frame on page 166*

Continues on next page

Removing cable harness in frame

Use this procedure to remove the cable harness in the frame.

TIP!

Before starting this procedure, first remove the cable harness in the base. See *Removing cable harness in base on page 162*.

	Action	Note
1.	**DANGER!** Turn off all electric power, hydraulic and pneumatic pressure supplies to the robot!	
2.	Disconnect the *motor cables* on motors axes 1 and 2.	How to remove the motor cables is described in section: • *Removing motors on page 228*
3.	Remove the *bracket* securing the cable package to the frame.	See the figure in: • *Location of the cable harness on page 160* (Cable harness, lower arm)
4.	Cut the *cable straps* securing the cable harness to the frame and lower arm.	See the figure in: • *Location of the cable harness on page 160* (Cable harness, lower arm)
5.	Carefully pull out the cable package through the hole in the frame.	**NOTE!** This procedure must be performed carefully in order not to damage cables or other components!
6.	Continue the removal of the cable package from the lower arm and armhouse.	How to remove the cable package from the lower arm and armhouse is described in section: • *Removing cable harness in lower arm and armhouse on page 167*

Continues on next page

Removing cable harness in lower arm and armhouse

Use this procedure to remove the cable harness in the lower arm and armhouse.

TIP!

Before starting this procedure, first remove the cable harness in the base *Removing cable harness in base on page 162* and frame *Removing cable harness in frame on page 166*.

	Action	Note
1.	**DANGER!** Turn off all electric power, hydraulic and pneumatic pressure supplies to the robot!	
2.	Cut the *cable strap* on the lower arm.	See the figure in: • *Location of the cable harness on page 160* (Cable harness, lower arm)
3.	Remove the *brackets* on the lower arm.	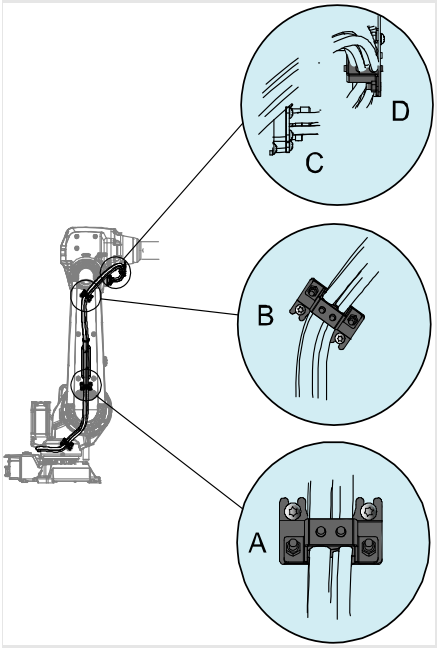 xx0900000020 Parts: • A: Bracket, lower arm • B: Bracket, lower arm • C: Bracket, armhouse • D: Cable bracket

Continues on next page

4.3.1. Removing the complete cable harness

Continued

	Action	Note
4.	Remove the *bracket* on the armhouse.	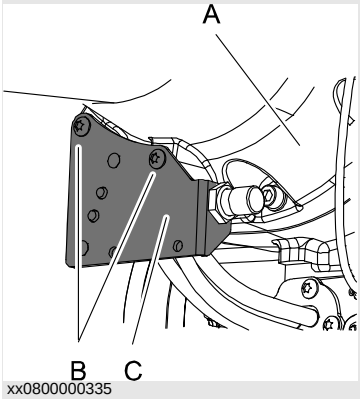 xx0800000335 Parts: • A: Tubular shaft unit • B: Attachment screws • C: Bracket, armhouse
5.	Remove the *cable cover* on the armhouse.	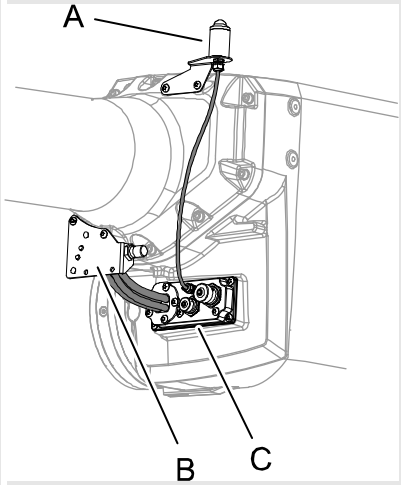 xx0800000338 Parts: • A: Signal lamp • B: Bracket • C: Cable cover, armhouse
6.	Remove signal lamp if used.	
7.	Continue the removal of the cable package by removing the motor cables on motors axes 3, 4, 5 and 6.	How to remove the *motor cables* from *motors axes 3, 4, 5 and 6* is described in section: • *Removing motors on page 228*

4.3.2. Refitting the complete cable harness

Introduction

This procedure describes how to refit the complete cable harness.

How to remove the cable harness is described in *Removing the complete cable harness on page 159*.

The refitting procedure is presented in the order the work is recommended to be performed.

Therefore the order is different in the two procedures removal and refitting of the cable harness. Cross references will make it easy to find what is needed to know as the work continues.

The section *Refitting the complete cable harness* consists of the following parts presented in the order the work is recommended to be performed:

- Refitting in the frame *Refitting the cable harness in the frame on page 172*
- Refitting in the base *Refitting the cable harness in the base on page 174*
- Refitting in the lower arm and armhouse *Refitting the cable harness in the lower arm and armhouse on page 179*.

How to refit the SMB unit, brake release unit and motors can be found in:

- SMB unit *Refitting the SMB unit on page 185*
- Brake release unit *Refitting the brake release unit on page 190*
- Motors *Refitting motors on page 236*

Continues on next page

Location of the cable harness

The location of the cable harness in the base, frame and lower arm is shown in the figures.

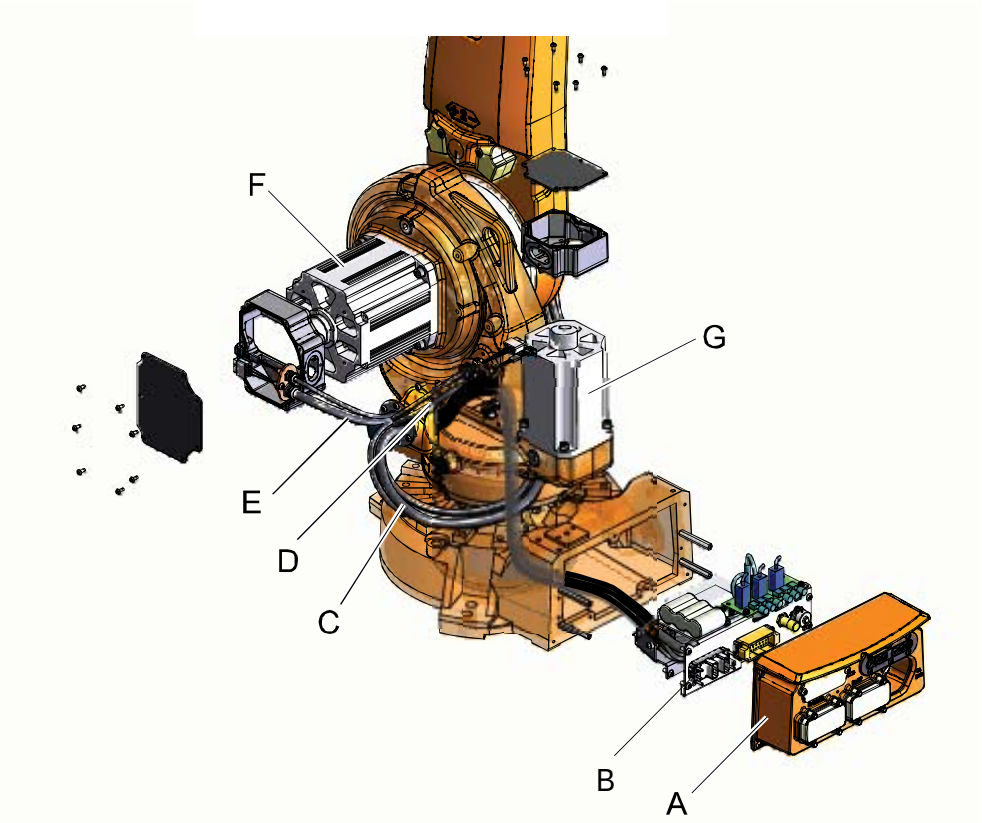

xx0900000009

Cable harness, base and frame.

A	Cover base
B	Bracket
C	Cable harness
D	Motor cable, axis 1
E	Motor cable, axis 2
F	Motor, axis 2
G	Motor, axis 1

Continues on next page

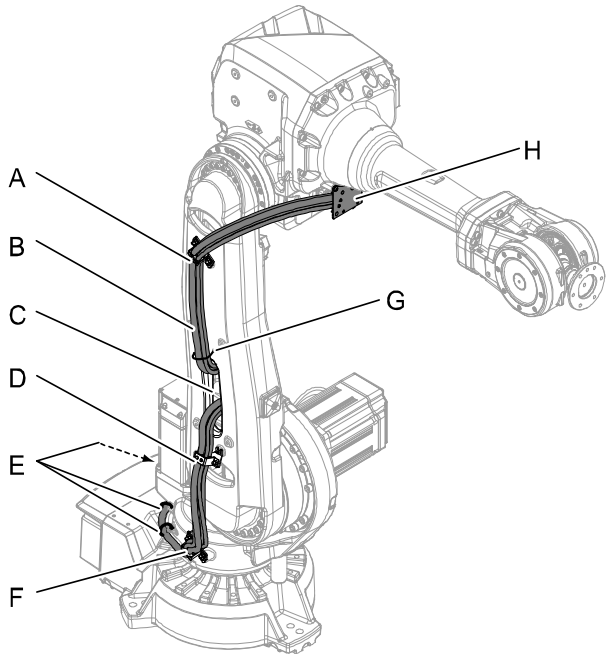

xx0900000012

Cable harness, lower arm.

A	Bracket, lower arm
B	Cable harness
C	Hole in lower arm
D	Bracket, lower arm
E	Cable straps, one not visible here (steel)
F	Bracket, frame
G	Cable strap, lower arm (plastic)
H	Bracket, armhouse

Required equipment

Equipment	Note
Standard toolkit	The content is defined in the section *Standard toolkit on page 276*.
Other tools and procedures may be required. See references to these procedures in the step-by-step instructions below.	These procedures include references to the tools required.
Cable grease	Shell Alvania WR2

Continues on next page

Refitting the cable harness in the frame

Use this procedure to refit the cable harness in the frame.

	Action	Note
1.	**DANGER!** Turn off all electric power, hydraulic and pneumatic pressure supplies to the robot!	
2.	Apply *cable grease* on these surfaces: • cable guide inside the hole • the part of the cable harness that runs through the cable guide.	Cable grease is specified in: • *Required equipment on page 171*
3.	**Use this procedure when replacing the old cable harness:** Push the cable harness carefully into the *hole in the frame* and out of the hole in the base. Perform the procedure in the following order: • R1.MP • R1.CP/CS • R1.SMB1-2 and R1.SMB3-6 • Air hose. **TIP!** In order to protect the connectors from getting residual grease on the cable harness, put some plastic over them prior to pushing it through the hole in the frame.	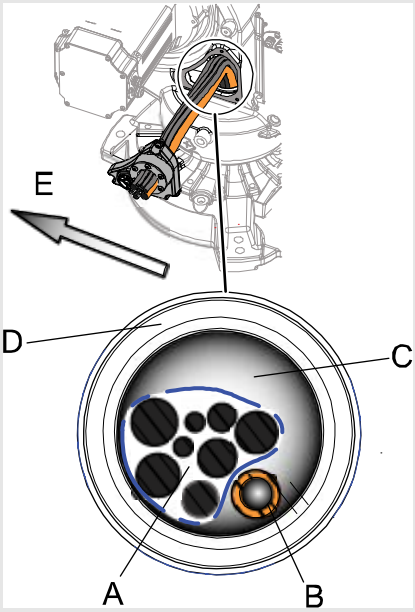 xx0900000096 Parts: • A: Cables • B: Air hose • C: Hole in frame • D: Cable guide • E: Position of the front of the robot **NOTE!** It is vital that the position of the air hose is correct, as shown in the illustration!

Continues on next page

	Action	Note
4.	**Use this procedure when fitting a new cable harness:** Without removing the plastic around cables and hose, carefully push the cable harness through the hole in the frame.	**NOTE!** Check that cables and air hose are placed as shown in the figure above.
5.	Secure the *cover* to the frame with its attachment screws.	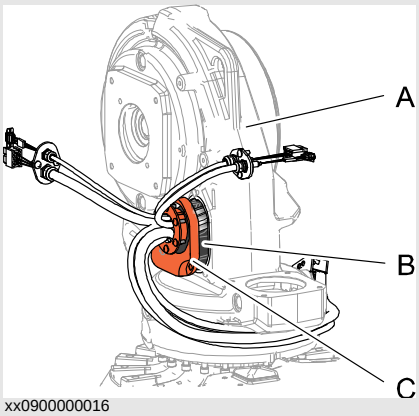 xx0900000016 Parts: • A: Frame • B: Hole in frame • C: Cover
6.	Connect *motor cables* to motors axes 1 and 2.	How to refit the motor cables is described in section: • *Refitting motors on page 236*
7.	Sort out the different cables the way they later will be fit on the bracket in the base.	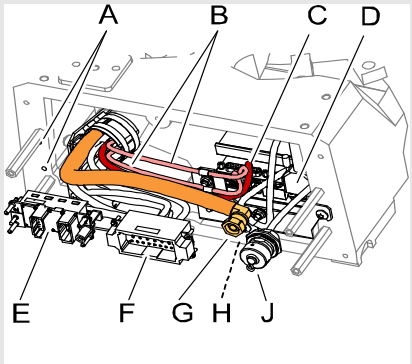 xx0900000017 Connections: • A: Earth cables • B: R1.SMB1-2 • C: R1.SMB3-6 • D: R2.SMB • E: R1.CP/CS • F: R1.MP • G: Air hose • H: Position of R1.CBUS (if used) • J: R1.SMB

Continues on next page

Continued

	Action	Note
8.	Continue the refitting of the cable harness in the base.	How to refit the cable harness in the base is described in section: • *Refitting the cable harness in the base on page 174*

Refitting the cable harness in the base

Use this procedure to refit the cable harness in the base.

TIP!

Before starting this procedure, first refit the cable harness in the *frame*. See:

- *Refitting the cable harness in the frame on page 172*

	Action	Note
1.	**DANGER!** Turn off all electric power, hydraulic and pneumatic pressure supplies to the robot!	
2.	Attach the *cable harness* to the bracket.	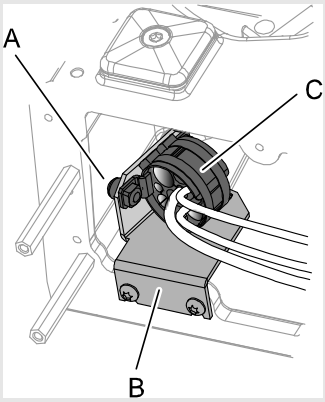 xx0900000098 Parts: • A: Attachment screw and nut • B: Bracket • C: Cable harness

Continues on next page

	Action	Note
3.	Secure the *bracket* on its *attachment screws* in the base. **TIP!** Perform this in the following order: • Put the *attachment screws* in the holes but do not tighten them yet. • Place the *bracket* on the attachment screws. • Secure the bracket with its attachment screws.	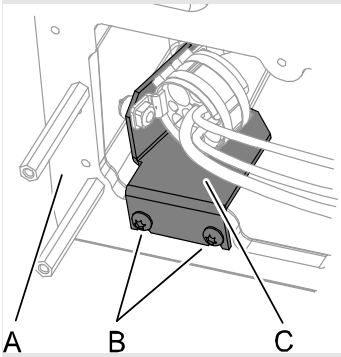 xx0900000018 Parts: • A: Base • B: Attachment screws (2 pcs) • C: Bracket
4.	Refit the *earth cables*.	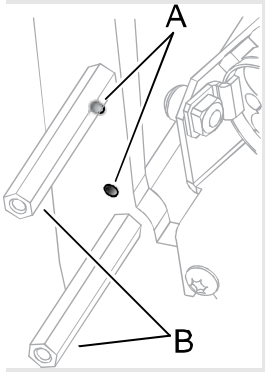 xx0900000015 Parts: • A: Earth • B: Distance screws
5.	Connect the contacts on the SMB unit: • R1.SMB1-2 • R1.SMB3-6 • R2.SMB	
6.	Refit the SMB unit.	How to refit the SMB unit is described in section: • *Refitting the SMB unit on page 185*

Continues on next page

4.3.2. Refitting the complete cable harness

Continued

	Action	Note
7.	Refit the cables with the *screen connections*.	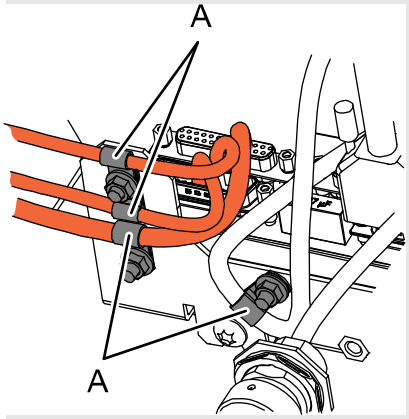 xx0900000097 Parts: • A: Screen connections (4 pcs)
8.	**TIP!** When refitting connectors on the *bracket*, put it at a 90° angle.	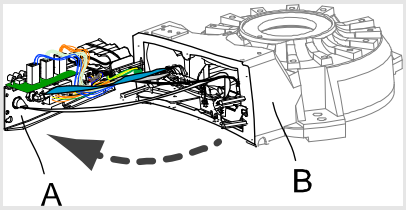 xx0900000013 Parts: • A: Bracket • B: Base

Continues on next page

	Action	Note
9.	Refit the *contacts* and *air hose* on the bracket: • R1.CP/CS • R1.CBUS (if used) • R1.MP • R1.SMB • Air hose **NOTE!** Check that there is no leakage from the air hose.	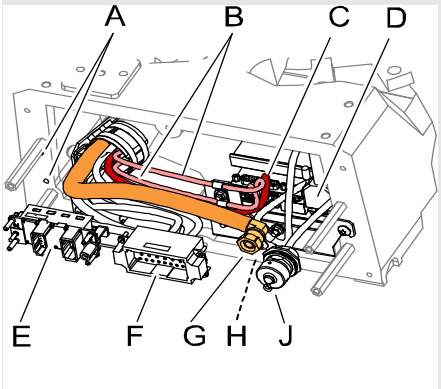 xx0900000017 Contacts: • A: Earth cables • B: R1.SMB1-2 • C: R1.SMB3-6 • D: R2.SMB • E: R1.CP/CS • F: R1.MP • G: Air hose • H: Position of R1.CBUS (if used) • J: R1.SMB
10.	Reconnect contacts on the brake release unit: • X8 • X9 • X10	
11.	Secure the bracket on the distance screws.	
12.	Secure the battery cable with *cable straps*.	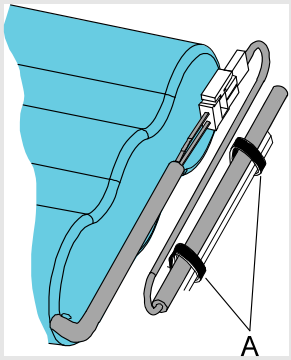 xx0900000099 Parts: • A: Cable straps (2 pcs)
13.	Push carefully back the base cover and at the same time check that no cables are damaged.	

Continues on next page

Continued

	Action	Note
14.	Secure the *base cover* with its attachment screws.	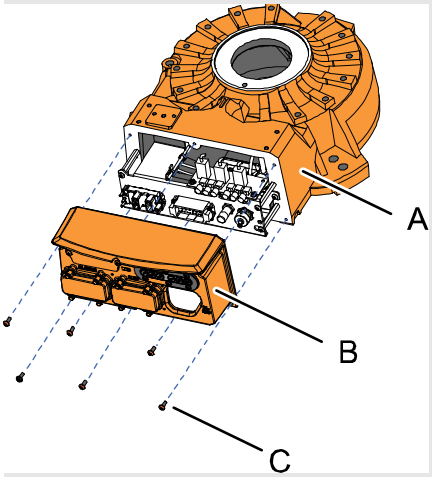 xx0800000456 Parts: • A: Base • B: Base cover • C: Attachment screws (6 pcs)
15.	Refit the *bracket* on the frame.	See the figure in: • *Location of the cable harness on page 170* (Cable harness, lower arm)
16.	Refit the *cable straps* securing the cable harness to the frame.	See the figure in: • *Location of the cable harness on page 170* (Cable harness, lower arm)
17.	Continue the refitting of the cable package on lower arm and armhouse.	How to refit the cable harness on the *lower arm and armhouse* is described in section: • *Refitting the cable harness in the lower arm and armhouse on page 179*

Continues on next page

Refitting the cable harness in the lower arm and armhouse

Use this procedure to refit the cable harness in the *lower arm* and *armhouse*.

TIP!

Before starting this procedure, first refit the cable harness in the *frame* and *base*. See:

- *Refitting the cable harness in the frame on page 172*
- *Refitting the cable harness in the base on page 174*

	Action	Note
1.	**DANGER!** Turn off all electric power, hydraulic and pneumatic pressure supplies to the robot!	
2.	Secure the *brackets* on the lower arm.	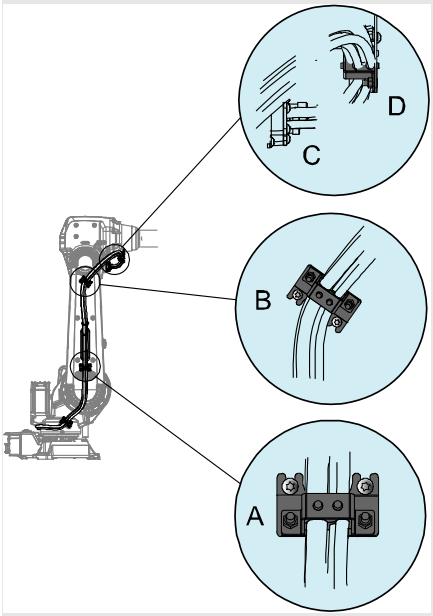 xx0900000020 Parts: • A: Bracket, lower arm • B: Bracket, lower arm • C: Bracket, armhouse • D: Cable bracket
3.	Refit the *cable straps* securing the cable harness to the lower arm.	See the figure in: • *Location of the cable harness on page 170* (Cable harness, lower arm)
4.	Push the cable harness carefully into the armhouse.	

Continues on next page

4.3.2. Refitting the complete cable harness

Continued

	Action	Note
5.	Secure the *bracket, armhouse* with its attachment screws.	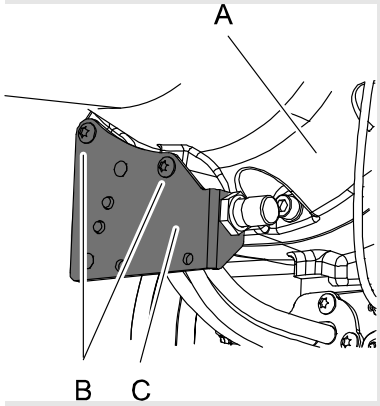 xx0800000335 Parts: • A: Tubular shaft unit • B: Attachment screws • C: Bracket, armhouse
6.	Secure the *cable bracket* to the armhouse with its attachment screws.	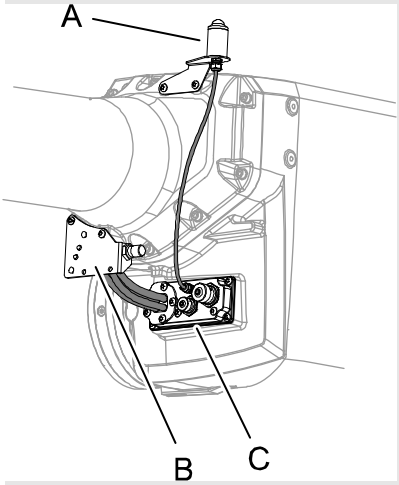 xx0800000338 Parts: • A: Signal lamp • B: Bracket, armhouse • C: Cable bracket
7.	Reconnect the *motor cables* on motors axes 3, 4, 5 and 6.	How to connect motor cables of motors axes 3, 4, 5 and 6 is described in section: • *Refitting motors on page 236*
8.	Recalibrate the robot.	Calibration is detailed in a separate calibration manual enclosed with the calibration tools. General calibration information is included in the section *Calibration*.

Continues on next page

Continued

	Action	Note
9.	**WARNING!** The cover on the armhouse must be fitted when the robot is running. It is a vital part for the stability of the robot.	
10.	**DANGER!** Make sure all safety requirements are met when performing the first test run. These are further detailed in the section *DANGER - First test run may cause injury or damage! on page 37*.	

4.3.3. Replacing SMB unit

Location of SMB unit

The SMB unit (SMB = Serial measurement board) is located in the base below the brake release unit, as shown in the figure.

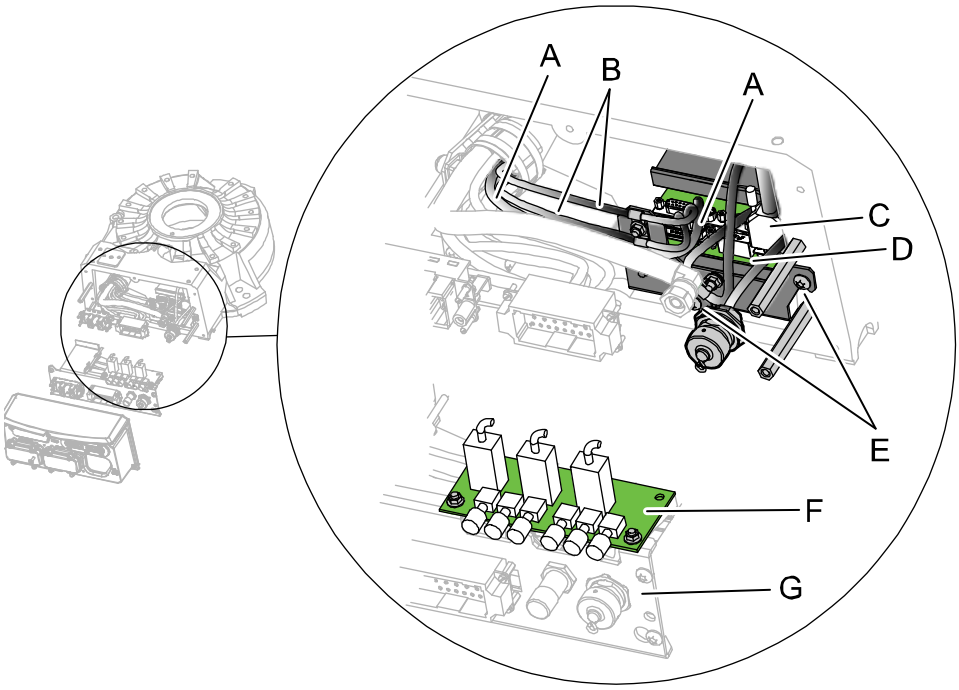

xx0800000466

A	R1.SMB3-6
B	R1.SMB1-2
C	R2.SMB
D	SMB unit
E	Attachment screws M6x16 quality 8.8-A2F (2 pcs)
F	Brake release unit
G	Bracket

Required equipment

Equipment	Note
Standard toolkit	The content is defined in the section *Standard toolkit on page 276*.
Other tools and procedures may be required. See references to these procedures in the step-by-step instructions below.	These procedures include references to the tools required.
SMB unit	For spare part no. see chapter Spare parts, section: • *Spare Parts*

Continues on next page

Removing the SMB unit

Use this procedure to remove the SMB unit.

	Action	Note
1.	**DANGER!** Turn off all electric power, hydraulic and pneumatic pressure supplies to the robot!	
2.	Remove the *base cover*.	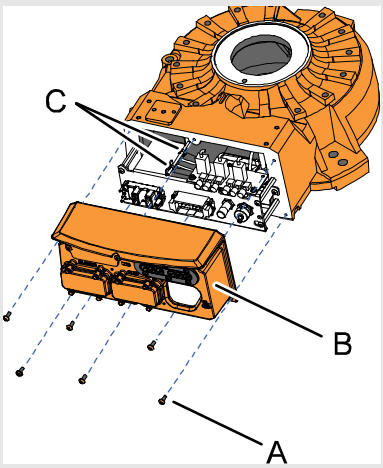 xx0900000103 Parts: • A: Attachment screws (6 pcs) • B: Base cover • C: Cable straps (2 pcs)
3.	Cut the *cable straps* securing the battery cable.	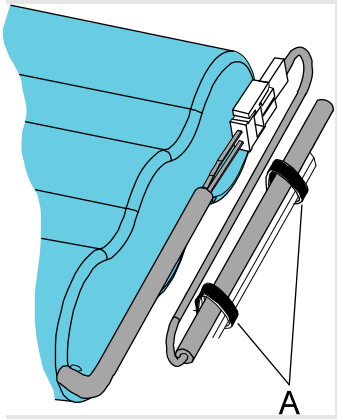 xx0900000099 Parts: • A: Cable straps (2 pcs)

Continues on next page

Continued

	Action	Note
4.	Remove one screw securing the bracket and loosen the other three attachment screws.	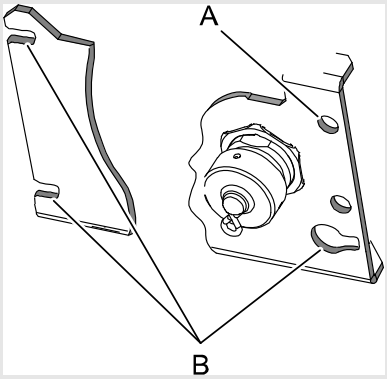 xx0900000100 Parts: • A: Screw to be removed • B: Screws to be loosened (3 pcs)
5.	Remove the *bracket* by sliding it off the remaining three attachment screws and put it at a 90° angle from the base. Putting the bracket at a 90° angle facilitates the disconnecting of cables from the bracket. **NOTE!** This procedure must be performed carefully in order not to damage cables or other components!	Cable harness can stay connected to all connectors except to the SMB unit. 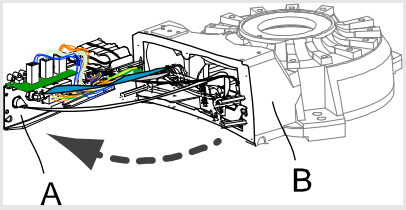 xx0900000013 Parts: • A: Bracket at a 90° angle • B: Base
6.	Disconnect cable clamps.	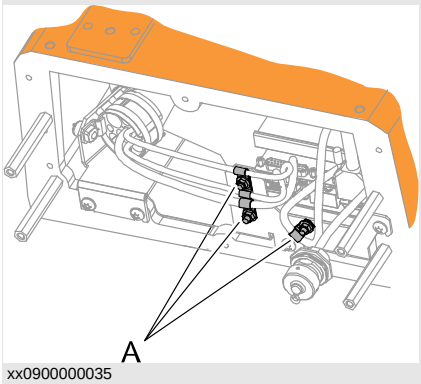 xx0900000035 Parts: • A: Cable clamps
7.	Loosen the *attachment screws* securing the SMB unit just enough to be able to remove the SMB unit.	See the figure in: • *Location of SMB unit on page 182*
8.	Remove the SMB unit.	

Continues on next page

Continued

	Action	Note
9.	Disconnect contacts on the SMB unit: • R1.SMB1-2 • R1.SMB3-6 • R2.SMB • Battery cable	See the figure in: • *Location of SMB unit on page 182*

Refitting the SMB unit

Use this procedure to refit the SMB unit.

	Action	Note
1.	**DANGER!** Turn off all electric power, hydraulic and pneumatic pressure supplies to the robot!	
2.	Reconnect contacts on the SMB unit: • R1.SMB1-2 • R1.SMB3-6 • R2.SMB • Battery cable	See the figure in: • *Location of SMB unit on page 182*
3.	Place the SMB unit on its *attachment screws*.	See the figure in: • *Location of SMB unit on page 182*
4.	Secure the SMB unit with its attachment screws.	
5.	Refit the *cable clamps*.	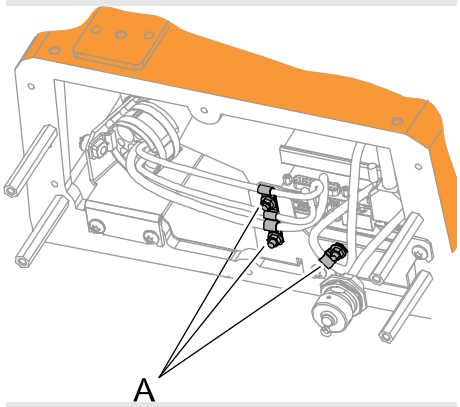 xx0900000035 Parts: • A: Cable clamps

Continues on next page

Continued

	Action	Note
6.	Put back the cable harness in the base and refit the bracket on the distance screws. **NOTE!** This procedure must be performed carefully in order not to damage cables or other components!	See the figure in: • *Location of SMB unit on page 182*
7.	Secure the battery cable with cable straps.	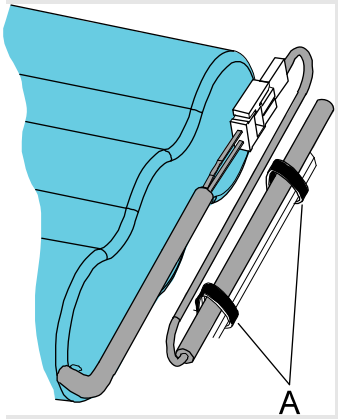 xx0900000099 Parts: • A: Cable straps (2 pcs)
8.	Push carefully back the *base cover* and at the same time check that no cables are damaged.	
9.	Refit the *base cover*.	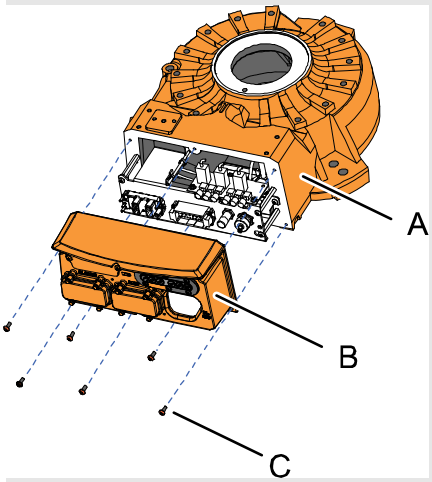 xx0800000456 Parts: • A: Attachment screws (6 pcs) • B: Base cover • C: Base

Continues on next page

Continued

	Action	Note
10.	Recalibrate the robot.	Calibration is detailed in a separate calibration manual enclosed with the calibration tools. General calibration information is included in the section *Calibration*.
11.	**DANGER!** Make sure all safety requirements are met when performing the first test run. These are further detailed in the section *DANGER - First test run may cause injury or damage! on page 37*.	

4.3.4. Replacing the brake release unit

Location of brake release unit

The brake release unit is located as shown in the figure.

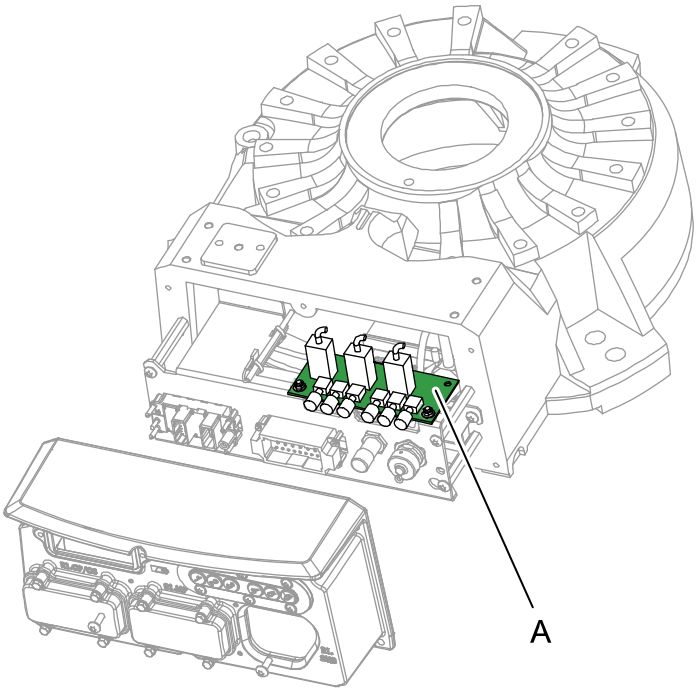

xx0900000101

A	Brake release unit

Connectors on push-button unit

The connectors X8, X9 and X10 are placed on the push-button unit as shown in the figure below.

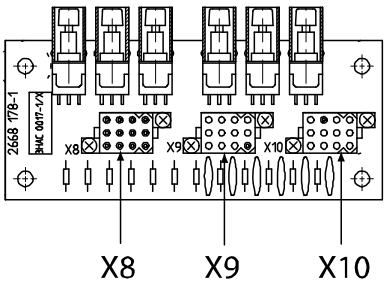

xx0300000201

Continues on next page

Required equipment

Equipment	Note
Standard toolkit	The content is defined in the section *Standard toolkit on page 276*.
Other tools and procedures may be required. See references to these procedures in the step-by-step instructions below.	These procedures include references to the tools required.

Removing the brake release unit

Use this procedure to remove the brake release unit.

	Action	Note
1.	**DANGER!** Turn off all electric power, hydraulic and pneumatic pressure supplies to the robot!	
2.	Remove the *base cover*.	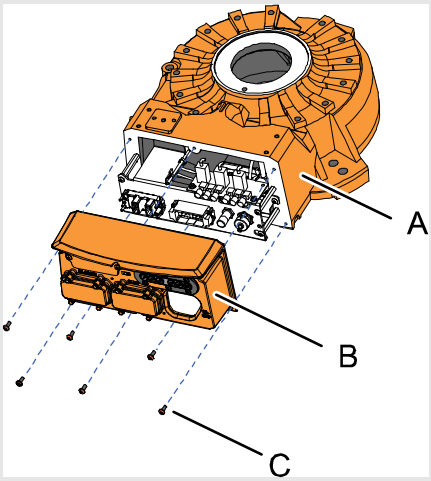 xx0800000456 Parts: • A: Base • B: Base cover • C: Attachment screws M6x16 quality 8.8-A2F (6 pcs)
3.	Disconnect *connectors X8, X9* and *X10* from the brake release unit.	See the figure in: • *Connectors on push-button unit on page 188*
4.	Remove the *nuts* securing the brake release unit.	See the figure in: • *Location of brake release unit on page 188*
5.	Remove the brake release unit.	

Continues on next page

Refitting the brake release unit

Use this procedure to refit the brake release unit.

	Action	Note
1.	**DANGER!** Turn off all electric power, hydraulic and pneumatic pressure supplies to the robot!	
2.	Secure the brake release unit to the *bracket* with its *nuts with flange*.	See the figure in: • *Location of brake release unit on page 188*
3.	Reconnect *connectors X8*, *X9* and *X10* to the brake release unit.	See the figure in: • *Connectors on push-button unit on page 188*
4.	Push carefully back the *base cover* and at the same time check that no cables are damaged.	
5.	Secure the *base cover* with its *attachment screws*.	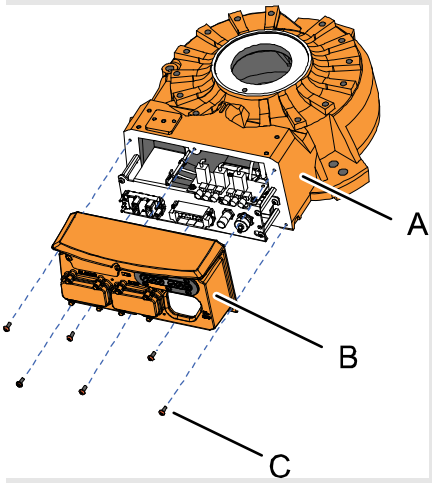 xx0800000456 Parts: • A: Base • B: Base cover • C: Attachment screws M6x16 quality 8.8-A2F (6 pcs)
6.	Check that the*brake release buttons* not are jammed.	How to check and fix the brake release buttons if jammed, is described in section: • *WARNING - The brake release buttons may be jammed after service work on page 38*

Continues on next page

	Action	Note
7.	**WARNING!** Before continuing any service work, please observe the safety information in section *WARNING - The brake release buttons may be jammed after service work on page 38*!	
8.	**DANGER!** Make sure all safety requirements are met when performing the first test run. These are further detailed in the section *DANGER - First test run may cause injury or damage! on page 37*.	

4.3.5. Replacing the base

Location of base and complete arm system

The complete arm system is defined as:

- complete upper arm (includes: wrist unit, tubular shaft unit and armhouse)
- lower arm
- frame.

The location of the base and the complete arm system is shown in the figure.

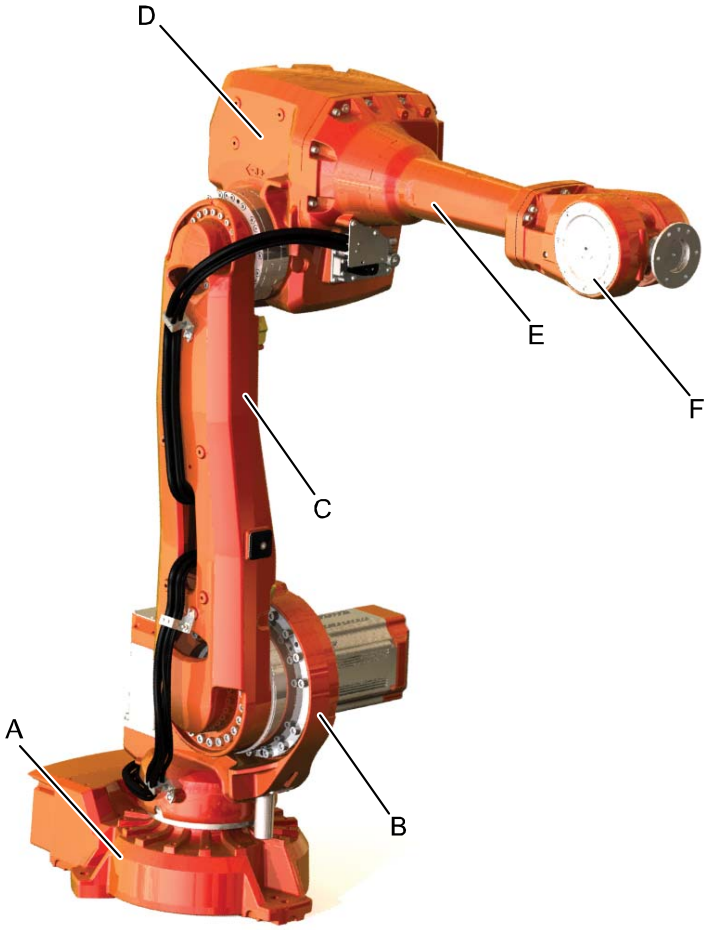

xx0800000345

A	Base
B	Frame
C	Lower arm
D	Armhouse (part of Upper arm complete)
E	Tubular shaft unit (part of Upper arm complete)
F	Wrist unit (part of Upper arm complete)

Continues on next page

Position of robot when replacing base from complete arm system

During the removal and refitting of the base from the complete arm system, the following method is recommended. How to perform the method is detailed in the procedures below. The position of the robot on loading pallets is shown in the figure.

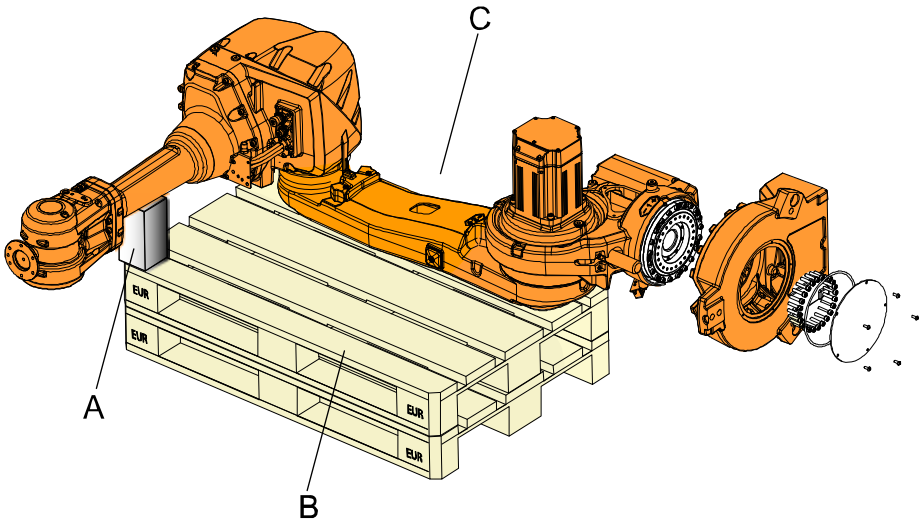

xx0800000352

A	Support for upper arm
B	Loading pallets
C	Robot

Required equipment

Equipment	Note
Standard toolkit	The content is defined in the section *Standard toolkit on page 276*.
Other tools and procedures may be required. See references to these procedures in the step-by-step instructions below.	These procedures include references to the tools required.
Loctite 574	

Continues on next page

Removing the base

Use this procedure to remove the base from the arm system.

CAUTION!

The complete arm system weighs:

- 400 kg

All lifting equipment used must be sized accordingly!

	Action	Note
1.	Move the robot to the position shown in the figure.	 xx0800000336
2.	**DANGER!** Turn off all electric power, hydraulic and pneumatic pressure supplies to the robot!	
3.	Drain the oil from gearbox axis 1. **NOTE!** Draining is time-consuming. Elapsed time varies depending on the temperature of the oil.	How to drain oil is detailed in section • *Changing oil, gearbox axis 1 on page 124*
4.	Remove the *cable harness* in the base and frame of the robot.	How to remove the cable harness in base and frame is detailed in sections: • *Removing cable harness in base on page 162* • *Removing cable harness in frame on page 166*
5.	Secure the robot with roundslings in an overhead crane.	

Continues on next page

	Action	Note
6.	**TIP!** Put the robot on its side on a couple of loading pallets put on top of each other in order to create a more comfortable working situation.	See the figure in: • *Position of robot when replacing base from complete arm system on page 193*
7.	Remove the bolts securing the robot to the foundation and carefully put it on the *loading pallet*s as shown in the figure. **DANGER!** Do not remove either *motor axis 2* or *3* at this stage! This will make the upper and lower arms move in a dangerous way and can cause serious personal injury or mechanical damage to the robot.	See the figure in: • *Position of robot when replacing base from complete arm system on page 193* **WARNING!** It is important to secure the robot properly on the loading pallet. Small movements can make the robot alter its position, which can cause personal injury or mechanical damage.
8.	Remove the *cover plate* at the bottom of the base.	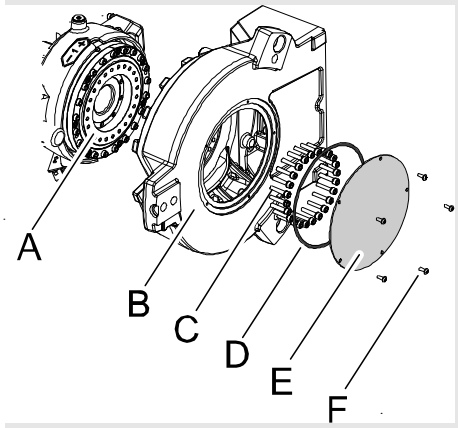 xx0800000357 Parts: • A: Gearbox axis 1 • B: Base • C: Attachment screws M8x40 quality Steel 12.9 Gleitmo and washers (24+24 pcs) • D: O-ring D220x5 • E: Cover plate • F: Attachment screws M6x16 quality 8.8-A2F (5 pcs)

Continues on next page

Continued

	Action	Note
9.	**CAUTION!** The base weighs: • 85 kg (including gearbox axis 1) • 60 kg (excluding gearbox axis 1) All lifting equipment used must be sized accordingly!	
10.	Secure the *base* of the robot with roundslings in an overhead crane or similar.	
11.	Remove the *attachment screws* securing the gearbox to the frame.	
12.	Remove the base carefully.	

Continues on next page

Refitting the base

Use this procedure to refit the base to the complete arm system.

CAUTION!

The complete arm system weighs:

- 400 kg

All lifting equipment used must be sized accordingly!

	Action	Note
1.	**DANGER!** Turn off all electric power, hydraulic and pneumatic pressure supplies to the robot!	
2.	Apply *Loctite 574* around the *screwholes* on gearbox axis 1 as shown in the figure.	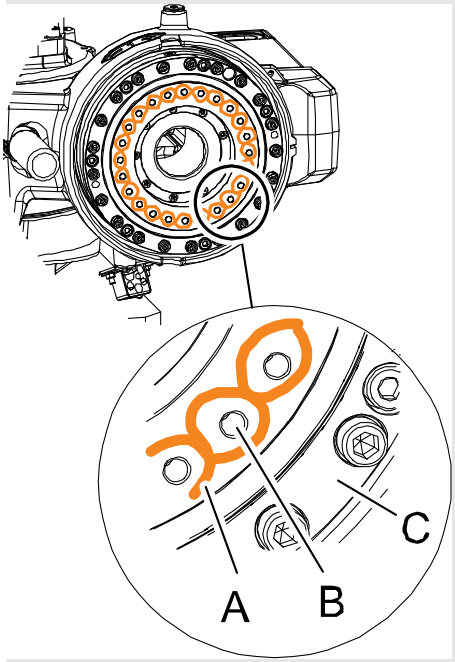 xx0800000353 Parts • A: Loctite 574 • B: Screwhole in gearbox axis 1 • C: Gearbox axis 1
3.	**CAUTION!** The base weighs: • 85 kg (including gearbox axis 1) • 60 kg (excluding gearbox axis 1) All lifting equipment used must be sized accordingly!	

Continues on next page

4.3.5. Replacing the base

Continued

	Action	Note
4.	Secure the *base* with a roundsling in an overhead crane or similar and lift it to the mounting site.	
5.	Refit the base with its *attachment screws* and *washers*.	Tightening torque: 35 Nm. 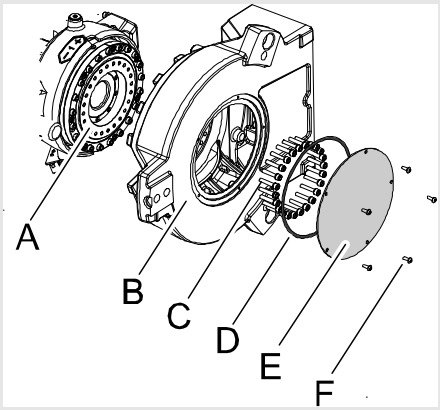 xx0800000357 Parts: • A: Gearbox axis 1 • B: Base • C: Attachment screws M8x40 quality Steel 12.9 Gleitmo and washers (24+24 pcs) • D: O-ring D220x5 • E: Cover plate • F: Attachment screws M6x16 quality 8.8-A2F (5 pcs)
6.	Apply some grease to the *o-ring* and refit the o-ring between the cover and base.	
7.	Refit the *cover plate* at the bottom of the base with its attachment screws.	
8.	Lift the robot carefully from the loading pallets and refit it to the foundation.	
9.	Recalibrate the robot.	Calibration is detailed in a separate calibration manual enclosed with the calibration tools. General calibration information is included in the section *Calibration*.
10.	**DANGER!** Make sure all safety requirements are met when performing the first test run. These are further detailed in the section *DANGER - First test run may cause injury or damage! on page 37*.	

4.4 Upper arm

4.4.1. Replacing the complete upper arm

Location of the complete upper arm

The complete upper arm is located as shown in the figure.

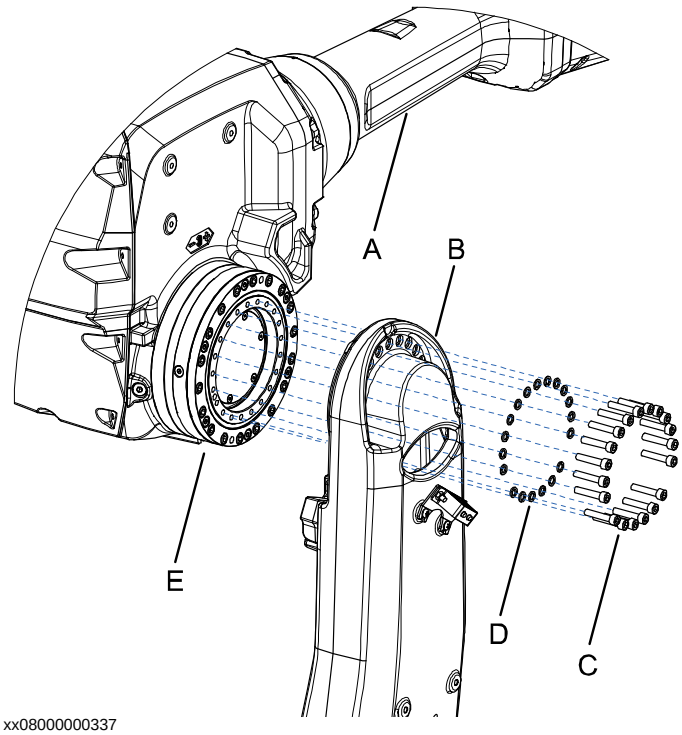

xx08000000337

A	Upper arm
B	Lower arm
C	Attachment screws M8x40 quality steel 12.9 Gleitmo (19 pcs)
D	Washers quality steel 8.4x13x1.5 (19 pcs)
E	Gearbox axis 3

Continues on next page

Required equipment

Equipment	Note
Standard toolkit	The content is defined in the section *Standard toolkit on page 276*.
Other tools and procedures may be required. See references to these procedures in the step-by-step instructions below.	These procedures include references to the tools required.
Armhouse	For spare part no. see chapter Spare parts, section: • *Upper arm(2.05/2.50/2.55) on page 286*
Tubular shaft unit	For spare part no. see chapter Spare parts, section: • *Upper arm(2.05/2.50/2.55) on page 286*

Removing the complete upper arm

Use this procedure to remove the complete upper arm. This procedure can be done without draining the oil from axis 3.

CAUTION!

The complete upper arm, including wrist unit, weighs (without any additional equipment fitted):

- IRB 4600-60/2.05, -45/2.05 and -40/2.55: 140 kg
- IRB 4600-20/2.50: 130 kg

All lifting equipment used must be sized accordingly!

	Action	Note
1.	Replace the upper arm with the robot placed in the position shown in the figure.	 xx0800000336
2.	**DANGER!** Turn off all electric power, hydraulic and pneumatic pressure supplies to the robot!	
3.	Secure the complete upper arm with roundslings in an overhead crane.	

Continues on next page

	Action	Note
4.	Disconnect all *motor cables* from motors axes 3, 4, 5 and 6.	How to disconnect cables from motors is detailed in sections: • *Removing motors on page 228*
5.	Remove the *bracket* fitted on the tubular shaft unit.	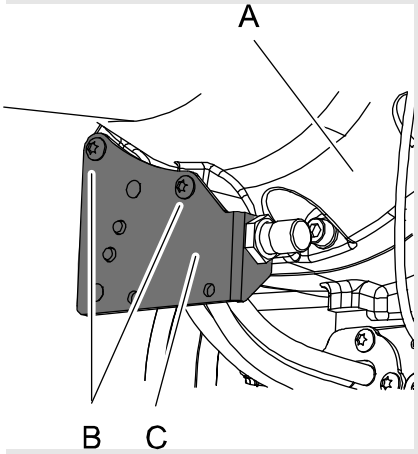 xx0800000335 Parts: • A: Tubular shaft unit • B: Attachment screws M6x16 quality 8.8-A2F (2 pcs) • C: Bracket
6.	Remove the *signal lamp*, if used.	
7.	Remove the *cable bracket* on the armhouse.	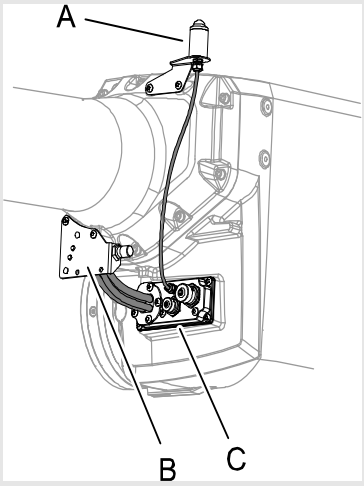 xx0800000338 Parts: • A: Signal lamp • B: Bracket • C: Cable bracket
8.	Carefully pull the cable package out of the hole where the cable bracket was fitted.	

Continues on next page

Continued

	Action	Note
9.	Remove the *attachment screws* securing the lower arm to the gearbox axis 3.	See the figure in: • *Location of the complete upper arm on page 199* **NOTE!** Do not remove the attachment screws securing the gearbox axis 3 to the armhouse!
10.	Remove the complete upper arm.	

Continues on next page

Refitting the complete upper arm

Use this procedure to refit the complete upper arm.

CAUTION!

The complete upper arm, including wrist unit, weighs (without any additional equipment fitted):

- IRB 4600-60/2.05, -45/2.05 and -40/2.55: 140 kg
- IRB 4600-20/2.50: 130 kg

All lifting equipment used must be sized accordingly!

	Action	Note
1.	**DANGER!** Turn off all electric power, hydraulic and pneumatic pressure supplies to the robot!	
2.	Secure the complete upper arm with roundslings in an overhead crane and lift it to the robot.	
3.	Refit the upper arm to the lower arm with its *attachment screws*.	See the figure in: • *Location of the complete upper arm on page 199* Tightening torque: • 35 Nm
4.	Carefully push the cable package through the hole where the *cable bracket* will be fitted.	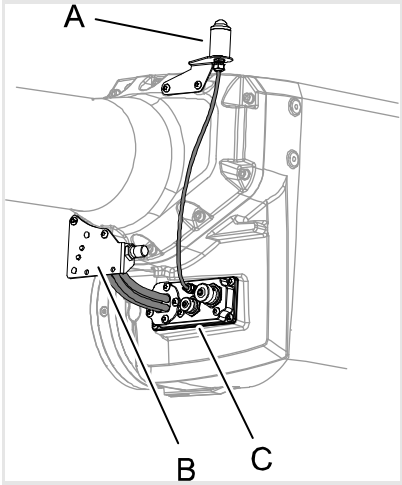 xx0800000338 Parts: • A: Signal lamp • B: Bracket • C: Cable bracket
5.	Refit the *cable bracket* with its attachment screws.	
6.	Reconnect all *motor cables*.	How to connect motor cables is detailed in sections: • *Refitting motors on page 236*

Continues on next page

4.4.1. Replacing the complete upper arm

Continued

	Action	Note
7.	Refit the *bracket* on the *tubular shaft unit*.	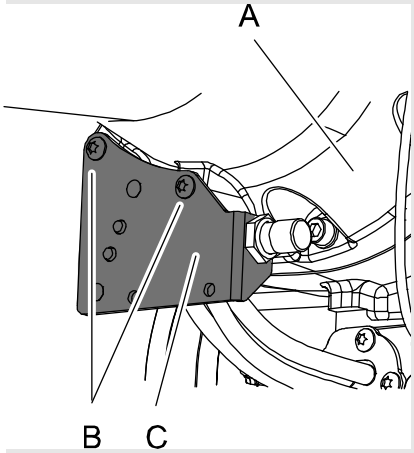 xx0800000335 Parts: • A: Tubular shaft unit • B: Attachment screws M6x16 quality 8.8-A2F (2 pcs) • C: Bracket
8.	Refit the *signal lamp*, if used.	
9.	Recalibrate the robot.	Calibration is detailed in a separate calibration manual enclosed with the calibration tools. General calibration information is included in the section *Calibration*.
10.	**DANGER!** Make sure all safety requirements are met when performing the first test run. These are further detailed in the section *DANGER - First test run may cause injury or damage! on page 37*.	

4.4.2. Replacing complete tubular shaft unit

Location of tubular shaft unit

The tubular shaft unit is located as shown in the figure.

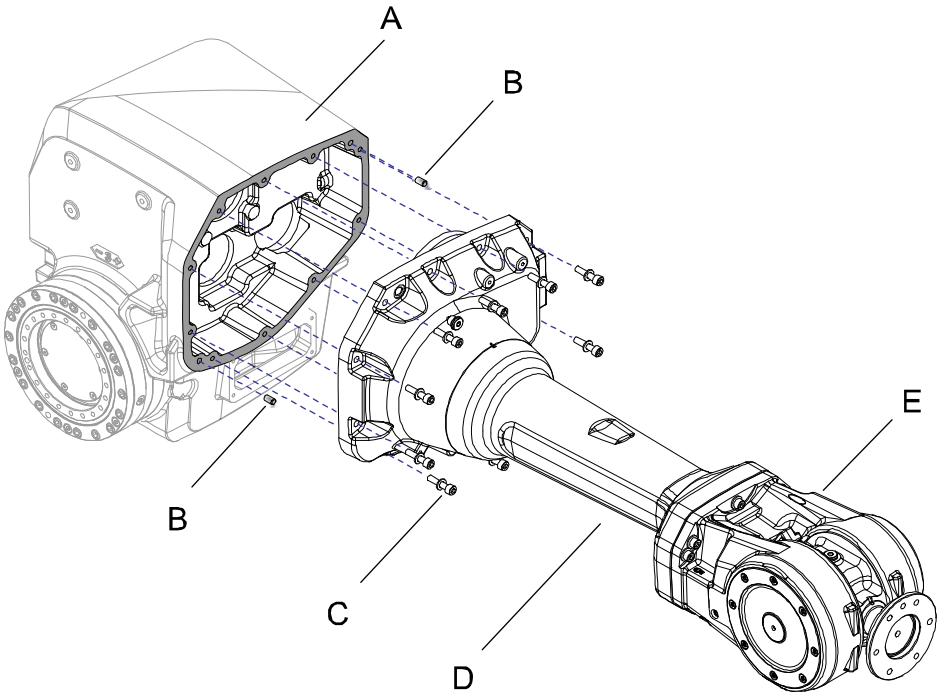

xx0800000334

A	Armhouse
B	Parallel pin, hardened 8x16 m6 (2 pcs)
C	Attachment screws M8x35 quality 8.8-A2F and washers (10 + 10 pcs)
D	Tubular shaft unit
E	Wrist unit

Required equipment

Equipment	Note
Tubular shaft unit	For spare part no. see chapter Spare parts, section: • *Upper arm(2.05/2.50/2.55) on page 286*
Standard toolkit	The content is defined in the section *Standard toolkit on page 276*.
Other tools and procedures may be required. See references to these procedures in the step-by-step instructions below.	These procedures include references to the tools required.

Continues on next page

Removing complete tubular shaft unit

Use this procedure to remove the complete tubular shaft unit.

CAUTION!

The tubular shaft unit (including wrist and gears) weighs:

- IRB 4600-60/2.05, -45/2.05 and -40/2.55: 65 kg
- IRB 4600-20/2.50: 50 kg

All lifting equipment used must be sized accordingly!

	Action	Note
1.	Drain *oil* from gearbox axis 4.	How to drain the oil from the gearbox is described in section: • *Changing oil, gearbox axis 4 on page 138*
2.	Move the robot to the position shown in the figure.	 xx0800000336
3.	**DANGER!** Turn off all electric power, hydraulic and pneumatic pressure supplies to the robot!	
4.	Remove the *bracket* securing the cable package to the tubular shaft unit by removing its attachment screws.	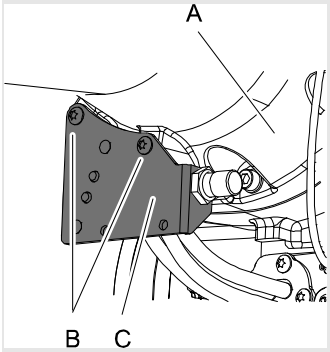 xx0800000335 Parts: • A: Tubular shaft unit • B: Attachment screws M6x16 quality 8.8-A2F (2 pcs) • C: Bracket

Continues on next page

	Action	Note
5.	Disconnect motor cables to motors axes 4, 5 and 6.	How to disconnect motor cables is described in section: • *Removing cable harness in lower arm and armhouse on page 167*
6.	Place the cable package in a way that it will not be damaged in the continued removal procedure.	
7.	Remove motors axes 4, 5 and 6.	How to remove motors is described in section: • *Removing motors on page 228*
8.	Secure the *tubular shaft unit* with roundslings in an overhead crane.	
9.	**TIP!** If only the tubular shaft unit shall be replaced, it is a good idea to remove the *wrist unit* at this stage.	How to remove the wrist unit is detailed in section: • *Removal of wrist unit on page 211*
10.	Remove the *attachment screws* securing the tubular shaft unit.	See the figure in: • *Location of tubular shaft unit on page 205*
11.	Carefully remove the *tubular shaft unit*. The tubular shaft unit is fitted with Loctite. **CAUTION!** Do not damage the gears when removing the tubular shaft unit.	**NOTE!** There are two parallel pins guiding the tubular shaft unit into its place. See figure in *Location of tubular shaft unit on page 205*.

Continues on next page

Refitting complete tubular shaft unit

Use this procedure to refit the tubular shaft unit.

CAUTION!

The tubular shaft unit (including wrist and gears) weighs:

- IRB 4600-60/2.05, -45/2.05 and -40/2.55: 65 kg
- IRB 4600-20/2.50: 50 kg

All lifting equipment used must be sized accordingly!

	Action	Note
1.	**DANGER!** Turn off all electric power, hydraulic and pneumatic pressure supplies to the robot!	
2.	Apply Loctite 574 on the surface between the tubular shaft unit and the armhouse.	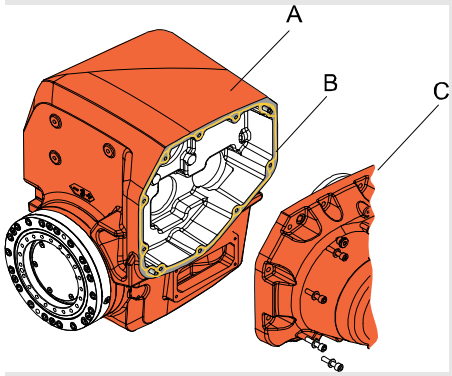 xx080000457 Parts: • A: Armhouse • B: Surface where Loctite 574 shall be applied • C: Tubular shaft unit
3.	Secure the tubular shaft unit with a roundsling in an overhead crane.	
4.	Carefully refit the tubular shaft unit. **CAUTION!** Do not damage the gears when refitting the tubular shaft unit.	**NOTE!** There are two parallel pins guiding the tubular shaft unit into its place.
5.	Secure the tubular shaft unit with its *attachment screws*.	See the figure in: • *Location of tubular shaft unit on page 205* Tightening torque: 22 Nm

Continues on next page

Continued

	Action	Note
6.	Refit the *cable harness*.	How to refit the cable harness is described in section: • *Refitting the cable harness in the lower arm and armhouse on page 179*
7.	Refit *motors axes 4, 5 and 6*.	How to refit motors is described in section: • *Refitting motors on page 236*
8.	Refit the *bracket* securing the cable package to the tubular shaft unit, with its *attachment screws*.	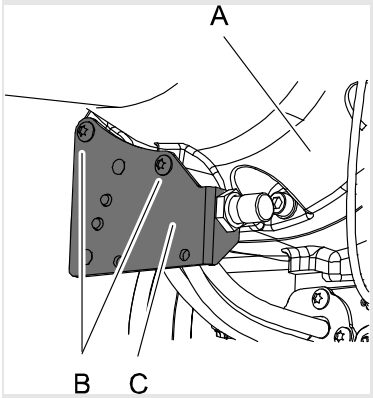 xx0800000335 Parts: • A: Tubular shaft unit • B: Attachment screws M6x16 quality 8.8-A2F (2 pcs) • C: Bracket
9.	If the *wrist unit* has been removed from the tubular shaft unit, refit it now.	How to refit the wrist unit is detailed in section: • *Refitting of wrist unit on page 212*
10.	Refill gearbox axis 4 with oil.	How to refill oil in gearbox is described in section: • *Changing oil, gearbox axis 4 on page 138*
11.	**DANGER!** Make sure all safety requirements are met when performing the first test run. These are further detailed in the section *DANGER - First test run may cause injury or damage! on page 37*.	

4.4.3. Replacing wrist unit

Location of wrist unit

The wrist unit is located in the upper arm as shown in the figures.

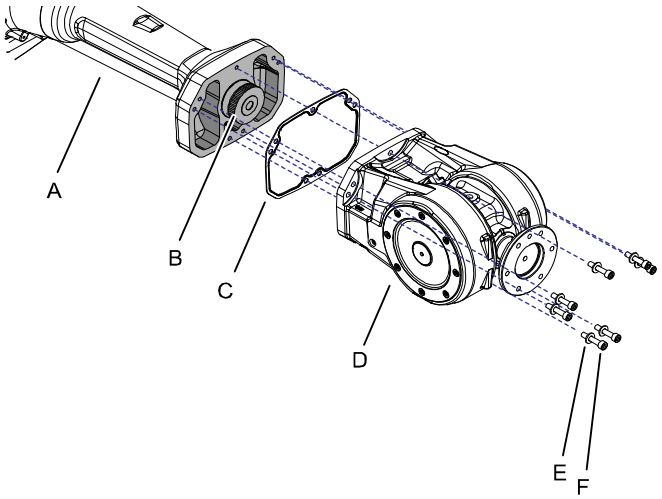

xx0800000333

IRB 4600 -60/2.05, -45/2.05, -40/2.55

A	Upper arm
B	Gear
C	O-ring sealing plate
D	Wrist unit
E	Spring washer, conical 8.4x18x2, quality steel-mZn12c (7 pcs)
F	Attachment screw M8x40, quality steel 12.9 Gleitmo (7 pcs)

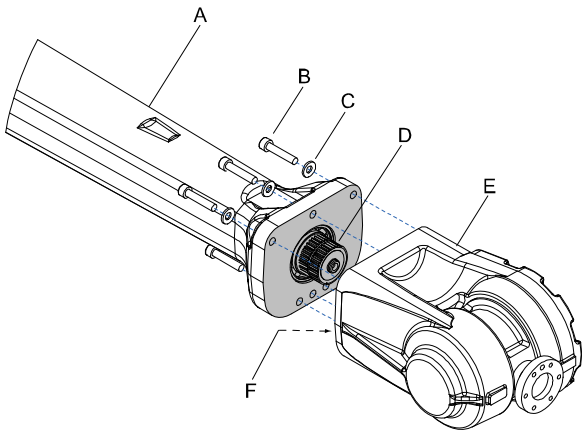

xx0800000341

IRB 4600 -20/2.50

A	Upper arm
B	Attachment screw M8x40, quality steel 12.9 Gleitmo (5 pcs)
C	Spring washer, conical 8.4x18x2, quality steel-mZn12c (5 pcs)
D	Gears
E	Wrist unit
F	O-ring (Placed on the wrist. Not visible here)

Continues on next page

Required equipment

Action	Note
Wrist unit	For spare part no of the variants see chapter Spare parts, section: • *Upper arm(2.05/2.50/2.55) on page 286*
Standard toolkit	The content is defined in the section *Standard toolkit on page 276*.
Other tools and procedures may be required. See references to these procedures in the step-by-step instructions below.	These procedures include references to the tools required.

Removal of wrist unit

Use this procedure to remove the wrist unit.

CAUTION!

The complete wrist unit weighs:

- IRB 4600-60/2.05, -45/2.05 and -40/2.55: 25 kg
- IRB 4600-20/2.50: 15 kg

All lifting equipment used must be sized accordingly!

	Action	Note
1.	**DANGER!** Turn off all electric power, hydraulic and pneumatic pressure supplies to the robot!	
2.	Drain *oil* from gearbox axes 5-6.	How to drain the oil from gearbox axes 5-6 is described in section: • *Changing oil, gearbox axes 5 and 6 on page 142*
3.	Secure the wrist unit with a roundsling in an overhead crane or similar.	
4.	Remove the *attachment screws*.	See the figure in: • *Location of wrist unit on page 210*
5.	Carefully remove the wrist unit in order not to damage the *gear*.	See the figure in • *Location of wrist unit on page 210*

Continues on next page

Refitting of wrist unit

Use this procedure to refit the wrist unit.

CAUTION!

The complete wrist unit weighs:

- IRB 4600-60/2.05, -45/2.05 and -40/2.55: 25 kg
- IRB 4600-20/2.50: 15 kg

All lifting equipment used must be sized accordingly!

	Action	Note
1.	**DANGER!** Turn off all electric power, hydraulic and pneumatic pressure supplies to the robot!	
2.	**Not applicable to variant IRB 4600-20/2.50.** Fit the *o-ring sealing plate*.	See the figure in: • *Location of wrist unit on page 210*
3.	Carefully put the *wrist unit* in its place on the *upper arm*. **CAUTION!** Do not damage gears!	See the figure in: • *Location of wrist unit on page 210*
4.	Measure the play.	How to measure the play is described in section: • *Measure the play*
5.	Secure the wrist unit with its *attachment screws* and *washers*.	See the figure in • *Location of wrist unit on page 210* Tightening torque: 35 Nm.
6.	Refill *oil* in gearbox axes 5-6.	How to fill oil in gearbox axes 5-6 is described in section: • *Changing oil, gearbox axes 5 and 6 on page 142*
7.	Recalibrate the robot.	Calibration is detailed in a separate calibration manual enclosed with the calibration tools. General calibration information is included in the section *Calibration*.
8.	**DANGER!** Make sure all safety requirements are met when performing the first test run. These are further detailed in the section *DANGER - First test run may cause injury or damage! on page 37*.	

4.4.4. Measuring the play, axis 5

General

After reassembly due to repair work or any other reason, the play in axis 5 and 6 must be checked to ensure the repetition accuracy of the robot positioning. The procedure for axis 5 is detailed below.

Required equipment

Equipment, etc.	Art. no.	Note
Standard toolkit	-	The content is defined in the section *Standard toolkit on page 276*.
Measuring tool, play (IRB 4600 -60/2.05, -45/2.05, -40/2.55)	3HAB 1611-6	
Measuring tool, play (IRB 4600 -20/2.50)	3HAB 6337-1	
Other tools and procedures may be required. See references to these procedures in the step-by-step instructions below.		These procedures include references to the tools required.

Continues on next page

Measurement, axis 5

The procedure below details how to measure the play of axis 5.

NOTE!

The measuring tool and measuring values differ depending on robot version!

	Action	Info
1.	**DANGER!** Turn off all electric power, hydraulic and pneumatic pressure supplies to the robot!	
2.	Move the robot to calibration position and turn the axis 4 90°.	
3.	Fit the *measuring tool, play* to the turning disk.	Art. no. is specified in *Required equipment on page 213*.
4.	Apply load F in one direction, as shown in the figure to the right. **NOTE!** Different load and distances for the different robot versions, as specified to the right!	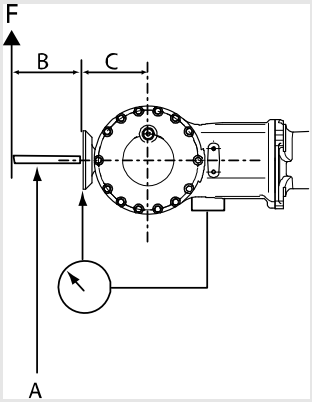 xx0300000186 **Values for IRB 4600 - 60/2.05, -45/2.05, -40/2.55:** • A: Measuring tool, play • B: 100 mm • C: 135 mm • F: 90N **Values for IRB 4600 -20/2.50:** • A: Measuring tool, play • B: 140 mm • C: 85 mm • F: 40N
5.	Remove the load and set the dial indicator to zero.	

Continues on next page

	Action	Info
6.	Apply load F in the opposite direction, as shown in the figure to the right.	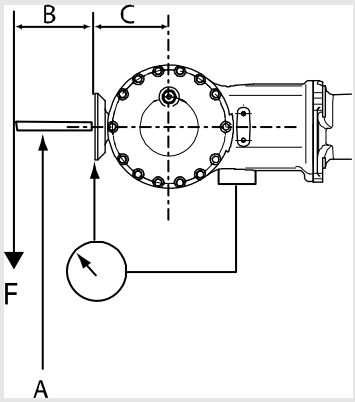 xx0300000187 **Values for IRB 4600 -60/2.05, -45/2.05, -40/2.55:** • A: Measuring tool, play • B: 135 mm • C: 100 mm • F: 90N **Values for IRB 4600 -20/2.50:** • A: Measuring tool, play • B: 85 mm • C: 140 mm • F: 40N
7.	Remove the load and measure the play by reading the dial indicator.	The maximum play allowed at the given distance from the center of axis 5 is, for robot version: • IRB 4600 -60/2.05, -45/2.05, -40/2.55: **0.15 mm** • IRB 4600 -20/2.50: **0.12 mm**

4.4.5. Measuring the play, axis 6

General

After reassembly due to repair work or any other reason, the play in axis 5 and 6 must be checked to ensure the repetition accuracy of the robot positioning. The procedure for axis 6 is detailed below.

Required equipment

Equipment	Art. no.	Note
Standard toolkit	-	The content is defined in the section *Standard toolkit on page 276*.
Measuring tool, play (IRB 4600 -60/2.05, -45/2.05, -40/2.55)	3HAB 1611-6	
Measuring tool, play (IRB 4600 -20/2.50)	3HAB 6337-1	
Other tools and procedures may be required. See references to these procedures in the step-by-step instructions below.		These procedures include references to the tools required.

Continues on next page

Measurement, axis 6

The procedure below details how to measure the play in axis 6.

NOTE!

The measuring tool and measuring values differ depending on robot version!

	Action	Info
1.	**DANGER!** Turn off all electric power, hydraulic and pneumatic pressure supplies to the robot!	
2.	Fit the *measuring tool, play* to the turning disk.	Art. no. is specified in *Required equipment on page 216*.
3.	Attach a weight (m) at a distance (B) from the wrist flange, in order to avoid the effects of play on axis 5. **NOTE!** Different weight and distance for the different robot versions, as specified to the right!	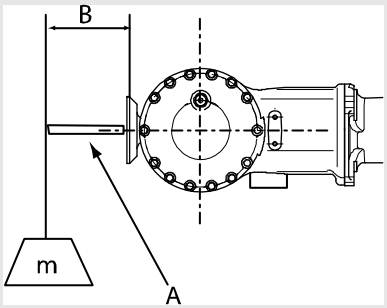 xx0300000188 **Values for robot versions IRB 4600 -60/2.05, -45/2.05, -40/2.55:** • A: Measuring tool, play • B: 100 mm • m: 20 kg **Values for robot version IRB 4600 -20/2.50:** • A: Measuring tool, play • B: 140 mm • m: 10 kg

Continues on next page

4.4.5. Measuring the play, axis 6

Continued

	Action	Info
4.	Apply load F in one direction. **NOTE!** Different load and distances for the different robot versions, as specified to the right!	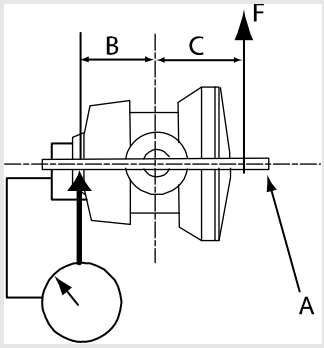 xx0300000189 **Values for robot versions IRB 4600 -60/2.05, -45/2.05, -40/2.55:** • A: Measuring tool, play • B: 100 mm • C: 100 mm • F: 50N **Values for robot version IRB 4600 -20/2.50:** • A: Mearuring tool, play • B: 100 mm • C: 150 mm • F: 40N
5.	Remove the load and set the dial indicator to zero.	
6.	Apply load F in the opposite direction, as shown in the figure to the right.	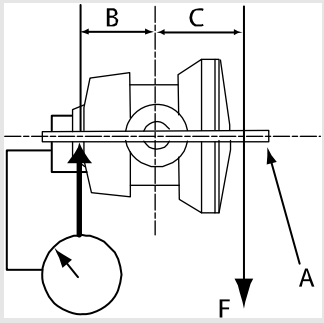 xx0300000190 **Values for robot versions IRB 4600 -60/2.05, -45/2.05, -40/2.55:** • A: Measuring tool, play • B: 100 mm • C: 150 mm • F: 50N **Values for robot version IRB 4600 -20/2.50:** • A: Measuring tool, play • B: 100 mm • C: 150 mm • F: 40N

Continues on next page

Continued

	Action	Info
7.	Remove the load and measure the play by reading the dial indicator.	The maximum play allowed at the given distance (B) from the center of axis 6 is, for robot version: • IRB 4600 -60/2.05, -45/2.05, -40/2.55: **0.16 mm** • Values for IRB 4600 -20/2.55: **0.22 mm**

4.5 Lower arm

4.5.1. Replacing the lower arm

Location of lower arm

The lower arm is located as shown in the figure.

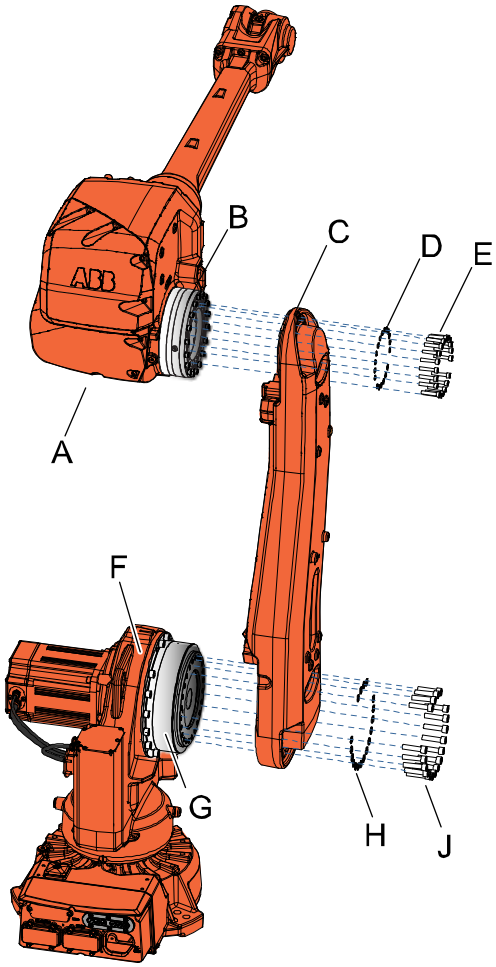

xx0800000360

The figure shows IRB 4600, but the principle is the same

A	Upper arm
B	Gearbox axis 3
C	Lower arm
D	Washer (19 pcs)
E	Attachment screws M8x40 quality Steel 12.9 Gleitmo (19 pcs)
F	Frame
G	Gearbox axis 2
H	Washer (18 pcs)
J	Attachment screws M12x50 quality Steel 12.9 Gleitmo (18 pcs)

Continues on next page

Required equipment

Equipment	Note
Lower arm	For spare part no of variants see chapter Spare parts, section: • *Lower arm and motors on page 284*
Standard toolkit	The content is defined in the section *Standard toolkit on page 276*.
Other tools and procedures may be required. See references to these procedures in the step-by-step instructions below.	These procedures include references to the tools required.

Removing the lower arm

Use this procedure to remove the lower arm.

CAUTION!

The lower arm weighs:

- IRB 4600-60/2.05 and -45/2.05: 60 kg
- IRB 4600-40/2.50 and -20/2.50: 65 kg

All lifting equipment used must be sized accordingly!

	Action	Note
1.	Move the robot to the position shown in the figure.	 xx0800000336
2.	**DANGER!** Turn off all electric power, hydraulic and pneumatic pressure supplies to the robot!	

Continues on next page

Continued

	Action	Note
3.	Remove the *cable package* from all axes except in the base.	How to remove the cable package in frame, lower arm and armhouse is described in sections: • *Removing cable harness in frame on page 166* • *Removing cable harness in lower arm and armhouse on page 167*
4.	Secure the upper arm with a roundsling in an overhead crane.	
5.	Remove the *complete upper arm* and put it on a loading pallet.	How to remove the complete upper arm is described in section: • *Removing the complete upper arm on page 200*
6.	Fit a *lifting lug* in one of the upper holes in the lower arm, for the attachment screws.	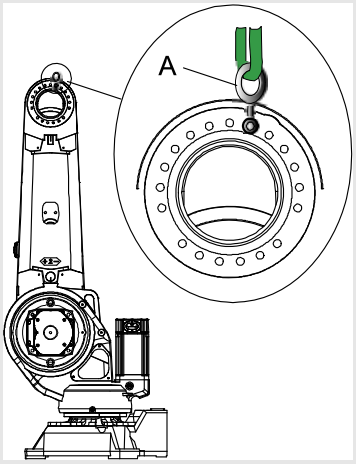 xx0800000379 Parts: • A: Lifting lug
7.	Remove the *attachment screws* securing the lower arm to gearbox axis 2.	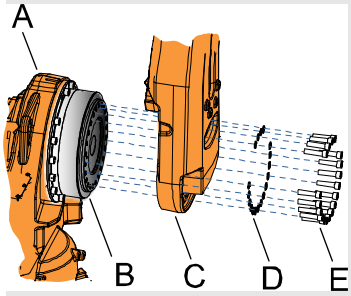 xx0800000377 Parts: • A: Frame • B: Gearbox axis 2 • C: Lower arm • D: Washer • E: Attachment screws, see *Location of lower arm on page 220*
8.	Remove the lower arm.	

Continues on next page

Refitting the lower arm

Use this procedure to refit the lower arm.

CAUTION!

The lower arm weighs:

- IRB 4600-60/2.05 and -45/2.05: 60 kg
- IRB 4600-40/2.50 and -20/2.50: 65 kg

All lifting equipment used must be sized accordingly!

	Action	Note
1.	**DANGER!** Turn off all electric power, hydraulic and pneumatic pressure supplies to the robot!	
2.	Fit a *lifting lug* in one of the upper holes in the lower arm, for the attachment screws.	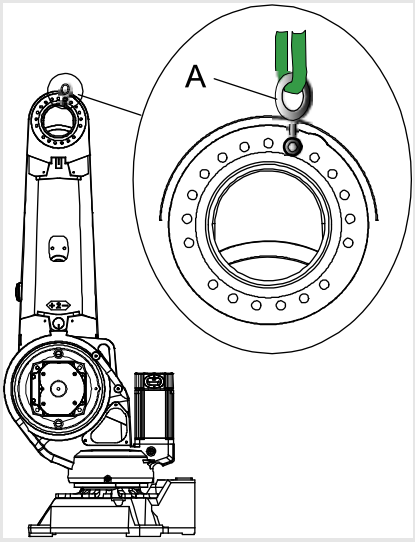 xx0800000379 Parts: • A: Lifting lug
3.	Secure the lower arm with a roundsling in an overhead crane and lift it to the robot.	

Continues on next page

4.5.1. Replacing the lower arm

Continued

	Action	Note
4.	Refit the *attachment screws* securing the lower arm to gearbox axis 2.	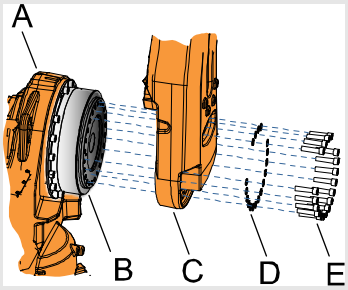 xx0800000377 Tightening torque: • 110 Nm Parts: • A: Frame • B: Gearbox axis 2 • C: Lower arm • D: Washer • E: Attachment screws, see *Location of lower arm on page 220*
5.	Secure the complete upper arm with roundslings in an overhead crane and lift it to the robot.	
6.	Refit the *complete upper arm*.	How to refit the complete upper arm is described in section: • *Refitting the complete upper arm on page 203*
7.	Refit the *cable package*.	How to refit the cable package in frame, lower arm and armhouse is described in sections: • *Refitting the cable harness in the frame on page 172* • *Refitting the cable harness in the lower arm and armhouse on page 179*
8.	Recalibrate the robot.	Calibration is detailed in a separate calibration manual enclosed with the calibration tools. General calibration information is included in the section *Calibration*.
9.	**DANGER!** Make sure all safety requirements are met when performing the first test run. These are further detailed in the section *DANGER - First test run may cause injury or damage! on page 37*.	

4.6 Frame and base

4.6.1. Replacing stop pin axis 1

Location of stop pin axis 1

The stop pin axis 1 is located as shown in the figure.

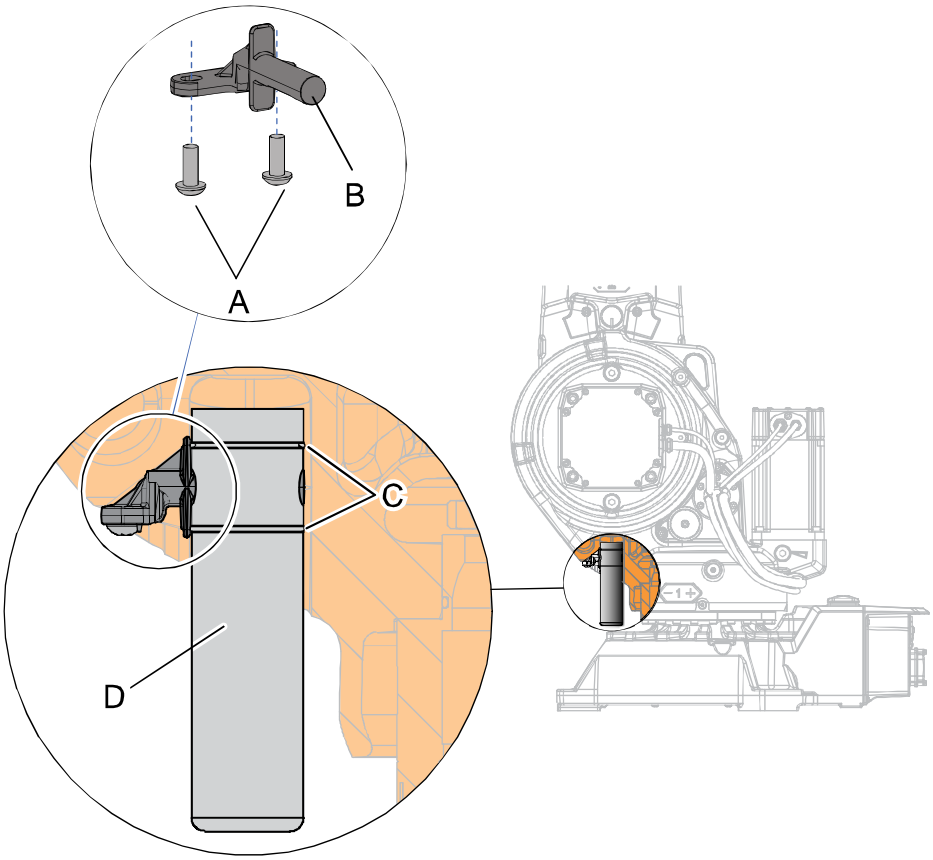

xx0800000452

A	Attachment screws M6x16 quality 8.8-A2F (2 pcs)
B	Bracket
C	O-ring (2 pcs)
D	Stop pin

Continues on next page

Required equipment

Equipment	Note
Stop pin	For spare part no. see chapter Spare parts, section: • *Lower arm and motors on page 284*
Standard toolkit	The content is defined in the section *Standard toolkit on page 276*.
Other tools and procedures may be required. See references to these procedures in the step-by-step instructions below.	These procedures include references to the tools required.

Removing the stop pin, axis 1

Use this procedure to remove the stop pin axis 1.

	Action	Note
1.	**DANGER!** Turn off all electric power, hydraulic and pneumatic pressure supplies to the robot!	
2.	Remove the *attachment screws* securing the *bracket* and *stop pin*.	See the figure in • *Location of stop pin axis 1 on page 225*
3.	Remove the *bracket* and *stop pin*.	See the figure in • *Location of stop pin axis 1 on page 225*

Refitting the stop pin, axis 1

Use this procedure to refit the stop pin axis 1.

	Action	Note
1.	**DANGER!** Turn off all electric power, hydraulic and pneumatic pressure supplies to the robot!	
2.	Fit the two *o-rings* on the stop pin.	See the figure in • *Location of stop pin axis 1 on page 225*

Continues on next page

	Action	Note
3.	Fit the *stop pin* on the *bracket*. **NOTE!** The small spike on the bracket shall be pointing downwards for correct fitting of the stop pin!	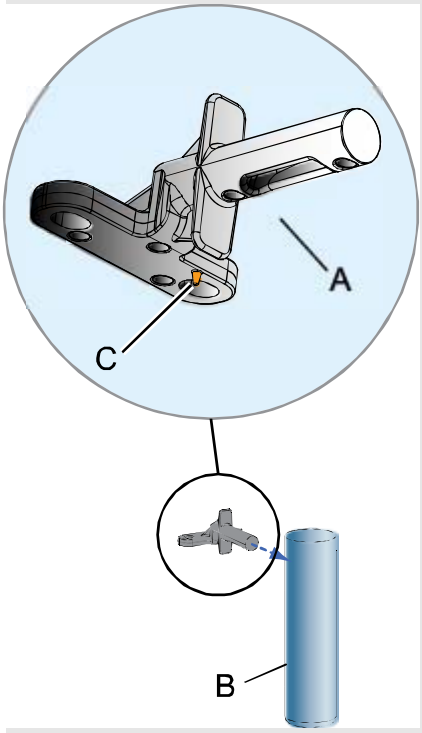 xx0800000453 Parts: • A: Bracket • B: Stop pin • C: Small spike
4.	Secure the stop pin on the frame with its *attachment screws*.	See the figure in • *Location of stop pin axis 1 on page 225*
5.	**DANGER!** Make sure all safety requirements are met when performing the first test run. These are further detailed in the section *DANGER - First test run may cause injury or damage! on page 37*.	

4.7 Motors

4.7.1. Removing motors

Introduction

This procedure describes how to remove motors on all axes of the robot.

Location of motors, axes 1 and 2

The motors of axes 1 and 2 are located as shown in the figure.

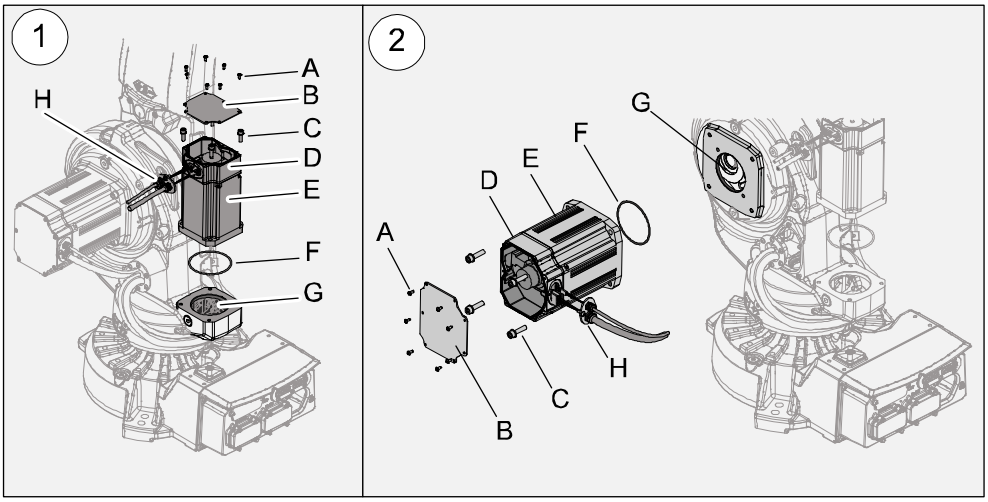

xx0900000302

Motors: (1) = Motor axis 1. (2) = Motor axes 2

A	Attachment screws M5x16, quality Steel 8-A2F (7 pcs)
B	Motor cover
C	Attachment screws, motor axis 1 (4 pcs) + washers. See *Tightening torques and attachment screws on page 240*
C	Attachment screws, motor axis 2 (4 pcs) + washers. See *Tightening torques and attachment screws on page 240*
D	Connection box
E	Motor, axis 1
E	Motor, axis 2
F	O-ring
G	Hole
H	Cable gland cover

Continues on next page

Location of motors axes 3, 4, 5 and 6

The motors of axes 3, 4, 5 and 6 are located as shown in the figures.

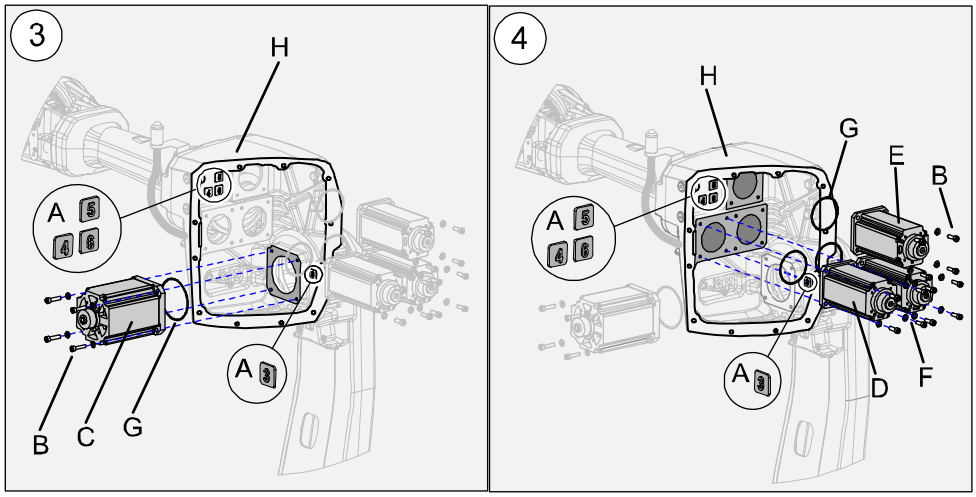

xx0900000303

Motors: (3) = Motor axis 3. (4) = Motors axes 4, 5 and 6

A	Markings inside armhouse, identifying the position of each motor
B	Attachment screws, motor axis 3 (4 pcs) + washers. See *Tightening torques and attachment screws on page 240*
B	Attachment screws, motors axes 4, 5 and 6 (3x4 pcs) + washers. *Tightening torques and attachment screws on page 240*
C	Motor, axis 3
D	Motor, axis 4
E	Motor, axis 5
F	Motor, axis 6
G	O-ring (axes 4, 5, 6)
H	Armhouse

Continues on next page

Connectors, motors axes 3 - 6

The figure shows the connectors of motors axes 3-6.

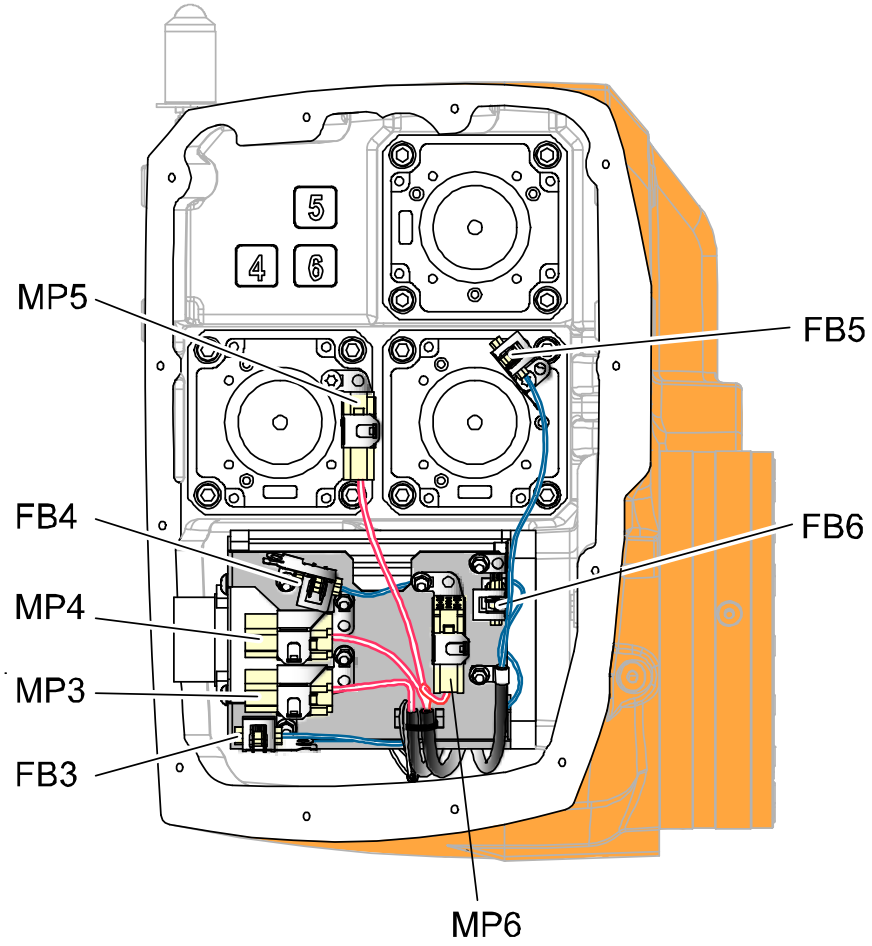

xx0900000410

Required equipment

Equipment	Note
Standard toolkit	The content is defined in the section *Standard toolkit on page 276*.
Other tools and procedures may be required. See references to these procedures in the step-by-step instructions below.	These procedures include references to the tools required.
Lifting tool, axis 2	For art. no. see *Reference information*.
Lifting tool, axis 3	For art. no. see *Reference information*.
Motor, axes 1 - 6	For spare part no. see chapter Spare parts section *Motors*.

Continues on next page

Weights

The motors for the different axes weighs according to the table:

Motor	Weight in kg
Motor, axis 1	13 kg
Motor, axis 2	25 kg
Motor, axis 3	13 kg
Motor, axis 4	8 kg
Motor, axis 5	8 kg
Motor, axis 6	8 kg

CAUTION!

All lifting equipment must be sized accordingly!

Position of robot

Use this procedure to place the robot in the position recommended in order to facilitate replacement of motors.

	Action	Info
1.	Motor axes 1, 4, 5 and 6: • Move the robot to a position where the wrist is pointing to the floor, as shown in the figure. This will make it possible to remove the motors from axes 1, 4, 5 and 6 without draining the oil from the gearbox.	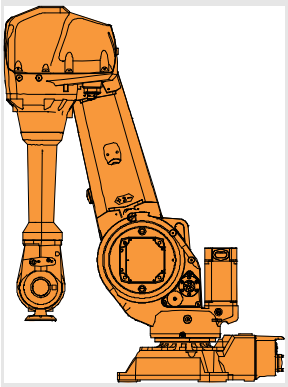 xx0800000388
2.	Motor axis 2 and 3: • Move the robot to the position shown in the figure until it almost rests on the damper of axis 3. **WARNING!** Secure the robot with a roundsling in an overhead crane, in order to avoid accidents when removing the motor!	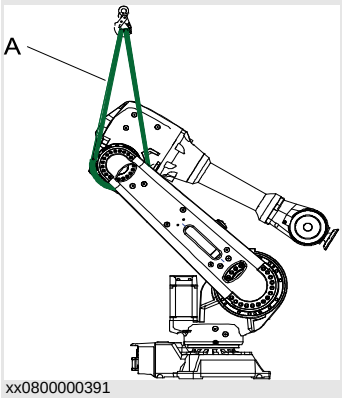 xx0800000391 Part: • A: Roundsling

Continues on next page

Draining oil from gearbox

Use this procedure to drain oil from gearboxes, if needed.

NOTE!

Draining of oil only needed when removing motors axes 2 and 3.

	Action	Note
1.	Motor, axis 1: • Draining of gearbox oil not needed.	-
2.	Motor, axis 2: • Draining of oil from the gearbox has to be done before removing the motor.	How to drain oil from gearbox is detailed in section: • *Changing oil, gearbox axis 2 on page 129*
3.	Motor, axis 3: • Draining of oil from the gearbox has to be done before removing the motor.	How to drain oil from gearbox is detailed in section: • *Changing oil, gearbox axis 3 on page 132*
4.	Motors, axes 4, 5 and 6: • Draining of gearbox oil not needed.	-

Continues on next page

Removing motors

Use this procedure to remove motors axes 1, 2, 3, 4, 5 and 6.

NOTE!

The procedure contains information how to remove motors on all axes of the robot. Some steps are only applicable to a certain motor. Follow the steps carefully in order not to miss vital information!

	Action	Note
1.	Move the robot to the recommended position for the motor that shall be removed.	See: • *Position of robot on page 231*
2.	**DANGER!** Turn off all electric power, hydraulic and pneumatic pressure supplies to the robot!	
3.	**Only applicable to motors axes 2 and 3!** Drain oil from the gearbox.	See: • *Draining oil from gearbox on page 232*
4.	**Only applicable to motors on axes 3, 4, 5 and 6!** Remove the cover in the back of the arm house. **WARNING!** The robot must never be run without the cover in the armhouse fitted! It is a vital supporting part of the robot.	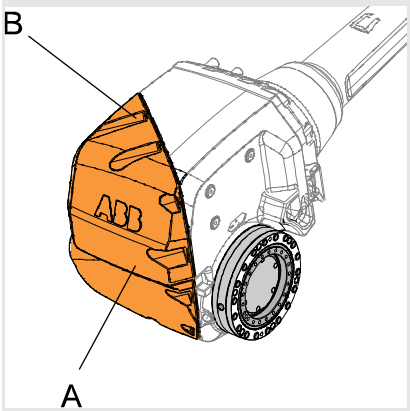 xx0800000389 Parts: • A: Cover • B: Attachment screws (10 pcs) + washers.
5.	**Only applicable to motors on axes 1 and 2 with fan fitted!** Remove the fan before starting the removal!	How to remove the fan is detailed in section: • *Installation of cooling fan for motors, axes 1 and 2 (option) on page 74*
6.	**Only applicable to motors on axes 1 and 2!** Remove the motor cover.	See the figure in: • *Location of motors, axes 1 and 2 on page 228*
7.	**Only applicable to motors on axes 1 and 2.** Remove the cable gland cover.	See the figure in: • *Location of motors, axes 1 and 2 on page 228*

Continues on next page

Continued

	Action	Note
8.	**Only applicable to motors on axes 1 and 2!** Remove the connection box. **NOTE!** Only needed if the motor shall be replaced with a new one.	See the figure in: • *Location of motors, axes 1 and 2 on page 228*
9.	Disconnect the *motor cables*.	**NOTE!** When removing motor axis 3, the cables of motors axes 4, 5 and 6 must be disconnected too. This must be done in order to be able to remove the bracket on top of motor axis 3.
10.	**Only applicable to motor axis 3.** Remove the *bracket* from motor axis 3.	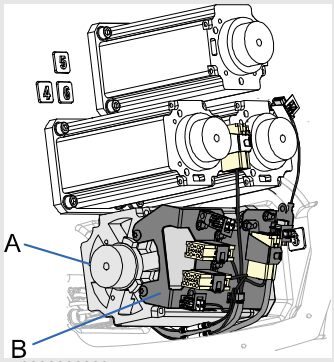 xx0800000390 Parts: • A: Motor axis 3 • B: Bracket
11.	In order to release the brakes, connect the 24 VDC power supply to the motor. **Only applicable to motors axes 2 and 3!** Release the brake of axis 2 untill the lower arm firmly rests on the damper.	Connectors: • Motor axis 1: R2.MP1 • Motor axis 2: R2.MP2 • Motor axis 3: R2.MP3 • Motor axis 4: R2.MP4 • Motor axis 5: R2.MP5 • Motor axis 6: R2.MP6 Connect to pins: • + : pin 2 • - : pin 5 **CAUTION!** The connections for the motor brakes (24 VDC connection) are phase dependent. If the connection on the pins is switched, it can cause severe damage to vital parts.

Continues on next page

Continued

	Action	Note
12.	**NOTE!** Whenever parting/mating motor and gearbox, the gears may be damaged if excessive force is used!	
13.	Remove the attachment screws securing the motor. If needed use a 300 mm extension for bits 1/2" (Motor axis 1).	See the figure in: • *Location of motors, axes 1 and 2 on page 228*
14.	If required, press the motor out of position by fitting two screws in the threaded holes in the motor flange.	**NOTE!** Always use removal tools in pairs diagonal to each other.
15.	Remove the motor!	**CAUTION!** Lift the motor gently in order not to damage pinion or gears.
16.	**Only applicable to motor axis 1!** Cover the hole if replacement of motor axis 1 is not immediate, in order to avoid contamination.	See the figure in: • *Location of motors, axes 1 and 2 on page 228*
17.	**Only applicable to motors axes 4, 5 and 6!** Check that the o-ring also is removed. It might stay in the armhouse when the motor is removed.	See the figure in: • *Location of motors, axes 1 and 2 on page 228*

4.7.2. Refitting motors

Introduction

This procedure describes how to refit motors on all axes of the robot.

Location of motors, motors axes 1 and 2

The motors of axes 1 and 2 are located as shown in the figure.

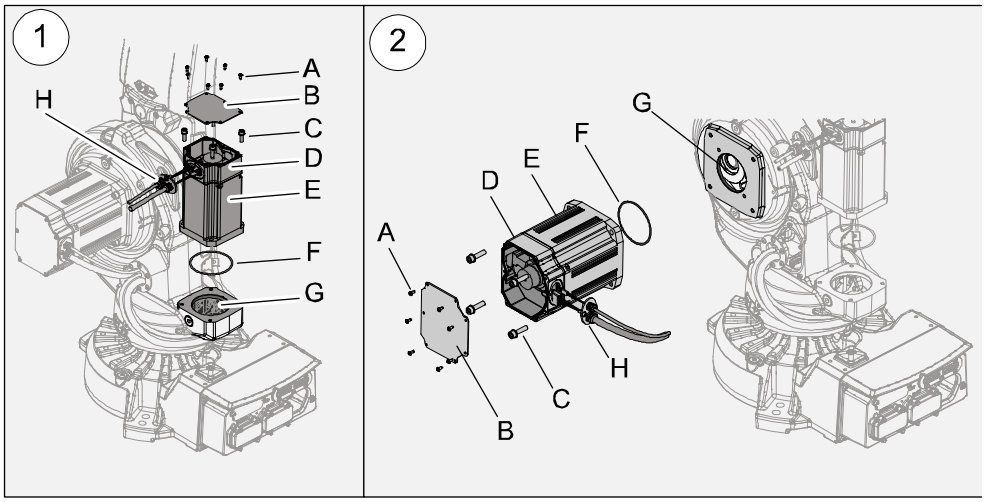

xx0900000302

Motors: (1) = Motor axis 1, (2) = Motors axis 2

A	Attachment screws M5x16, quality Steel 8-A2F (7 pcs)
B	Motor cover
C	**Motor axis 1:** Attachment screws(4 pcs) + washers. See *Tightening torques and attachment screws on page 240*
C	**Motor axis 2:** Attachment screw (4 pcs) + washers. See *Tightening torques and attachment screws on page 240*
D	Connection box
E	Motor, axis 1
E	Motor, axis 2
F	O-ring
G	Hole
H	Cable gland cover

Continues on next page

Location of motors, axes 3, 4, 5 and 6

The motors of axes 3, 4, 5 and 6 are located as shown in the figures.

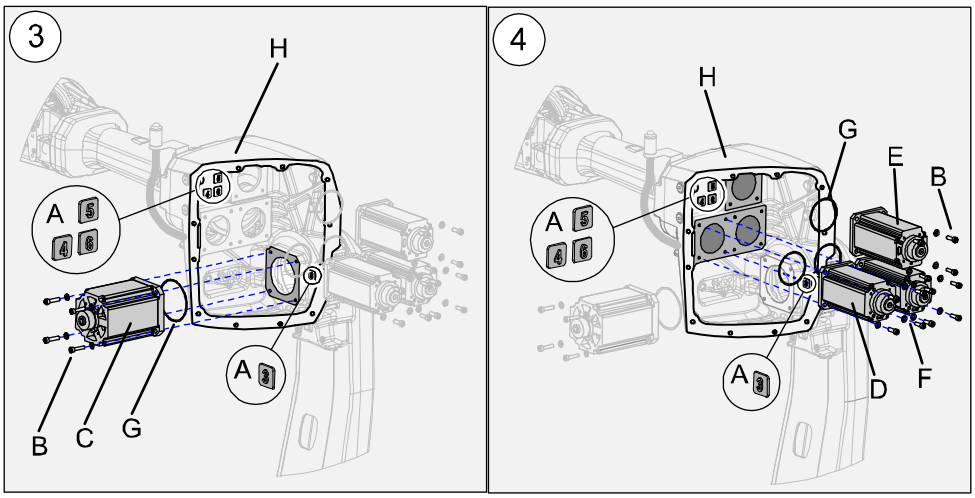

xx0900000303

Motors: (3) = Motor axis 3, (4) = Motor axes 4, 5 and 6

A	Markings inside armhouse, identifying the position of each motor
B	Attachment screws, motor axis 3 (4 pcs) + washers. See *Tightening torques and attachment screws on page 240*
B	Attachment screws, motors axes 4, 5 and 6 (3x4 pcs) + washers. See *Tightening torques and attachment screws on page 240*
C	Motor, axis 3
D	Motor, axis 4
E	Motor, axis 5
F	Motor, axis 6
G	O-ring (axes 4, 5, 6)
H	Armhouse

Continues on next page

Connectors, motors axes 3 - 6

The figure shows the connectors of motors axes 3-6.

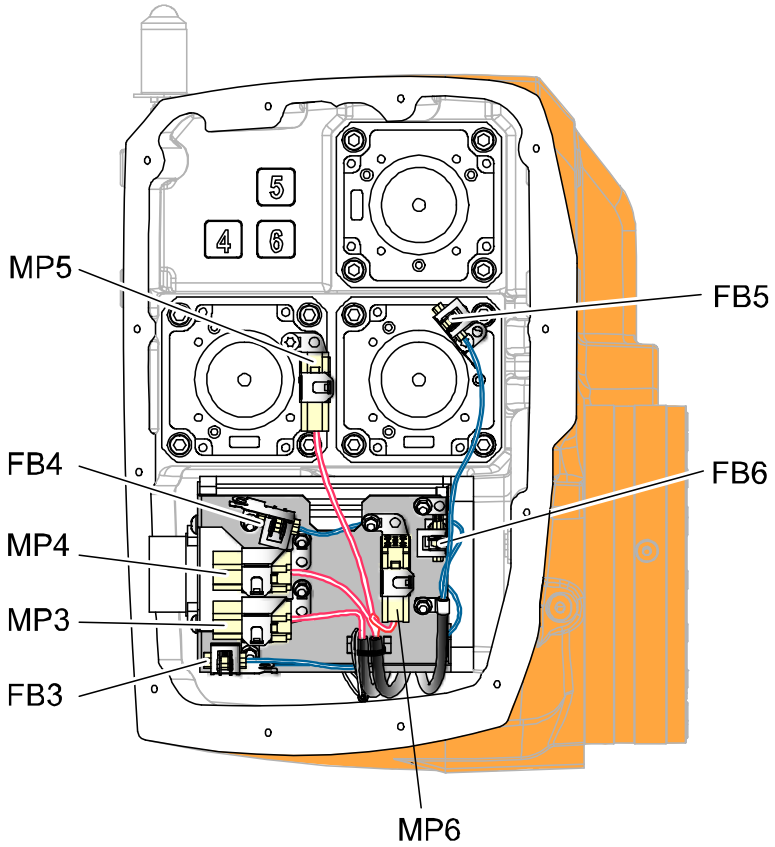

xx0900000410

Required equipment

Equipment	Note
Standard toolkit	The content is defined in the section *Standard toolkit on page 276*.
Other tools and procedures may be required. See references to these procedures in the step-by-step instructions below.	These procedures include references to the tools required.
Lifting tool, axis 2	For art. no. see *Reference information*.
Lifting tool, axis 3	For art. no. see *Reference information*.
Motor, axes 1 - 6	For spare part no. see chapter Spare parts section *Motors*.

Continues on next page

Weights

The motors for the different axes weighs according to the table:

Motor	Weight in kg
Motor, axis 1	13 kg
Motor, axis 2	25 kg
Motor, axis 3	13 kg
Motor, axis 4	8 kg
Motor, axis 5	8 kg
Motor, axis 6	8 kg

CAUTION!

All lifting equipment must be sized accordingly!

Position of robot

Use this procedure to place the robot in the position recommended in order to facilitate replacement of motors.

	Action	Note
1.	Motors axes 1, 4, 5 and 6: • Move the robot to a position where the wrist is pointing to the floor, as shown in the figure. This will make it possible to refit the motors from axes 1, 4, 5 and 6 without draining the oil from the gearbox.	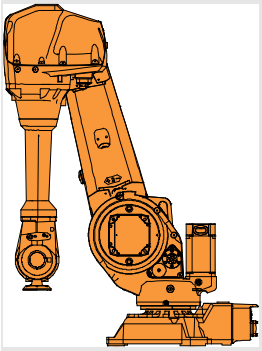 xx0800000388
2.	Motor axes 2 and 3: • Move the robot to the position shown in the figure until it almost rests on the damper of axis 3. **WARNING!** Secure the robot with a roundsling in an overhead crane, in order to avoid accidents when removing the motor!	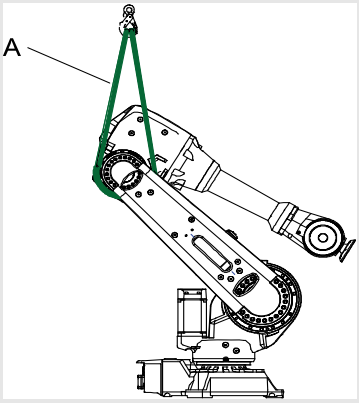 xx0800000391 Part: • A: Roundsling

Continues on next page

Filling oil in gearbox

Use this procedure to fill oil in gearbox, if needed.

NOTE!

Filling oil in the gearbox is only needed when refitting motors axes 2 and 3.

	Action	Note
1.	Motor, axis 1: • Filling gearbox oil not needed.	-
2.	Motor, axis 2: • Refill oil in gearbox after refitting.	How to fill oil in gearbox is detailed in section: • *Changing oil, gearbox axis 2 on page 129*
3.	Motor, axis 3: • Refill oil in gearbox after refitting.	How to fill oil in gearbox is detailed in section: • *Changing oil, gearbox axis 3 on page 132*
4.	Motor, axes 4, 5 and 6: • Filling gearbox oil not needed.	-

Tightening torques and attachment screws

The table shows the tightening torques for all motors.

Motor	Attachment screw	Quality	Tightening torque
Motor, axis 1	M8x25	8.8-A2F	22 Nm
Motor, axis 2	M10x40 [1)]	8.8-A2F	35 Nm
Motor, axis 3	M8x35 [1)]	8.8-A2F	22 Nm
Motor, axis 4	M8x25	8.8-A2F	22 Nm
Motor, axis 5	M8x25	8.8-A2F	22 Nm
Motor, axis 6	M8x25	8.8-A2F	22 Nm

[1)] Screwlengths can vary depending on when the robot is delivered. The different screwlengths depends on the different flange thickness of motors. Make sure to use the correct screwlength! See table:

Motor axis 2		Motor axis 3	
Flange thickness	Attachment screws	Flange thickness	Attachment screws
18.5 mm	M10x40	15 mm	M8x35
16 mm	M10x35	13 mm	M8x30

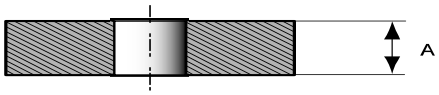

xx0900000443

A	Flange thickness

Continues on next page

Preparations before the refitting of motors

Use this procedure to make necessary preparations before refitting motors.

	Action	Note
1.	**DANGER!** Turn off all electric power, hydraulic and pneumatic pressure supplies to the robot!	
2.	Check that all assembly surfaces are clean before refitting the motor.	
3.	Make sure that the motor and the pinion are not damaged or scratched.	
4.	Lightly lubricate the o-ring with *grease*.	
5.	Make sure the *o-ring* on the flange of the motor is seated properly.	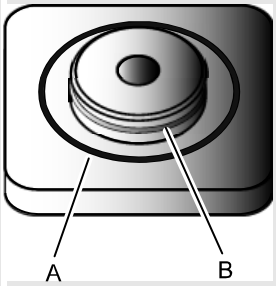 xx0900000082 Parts: • A: Correct position of o-ring • B: Incorrect position of o-ring ! Replace with a new o-ring if damaged!
6.	In order to release the brakes, connect the 24 VDC power supply.	Connectors: • Motor axis 1: R2.MP1 • Motor axis 2: R2.MP2 • Motor axis 3: R2.MP3 • Motor axis 4: R2.MP4 • Motor axis 5: R2.MP5 • Motor axis 6: R2.MP6 Connect to pins: • + : pin 2 • - : pin 5 **CAUTION!** The connections for the motor brakes (24 VDC connection) are phase dependent. If the connection on the pins is switched, it can cause severe damage to vital parts.

Continues on next page

Continued

NOTE!

Only applicable to motors on axes 1 and 2!

A fan is recommended to be used to avoid overheating of motor and gear in applications with intensive motion (high average torque and/or short wait time) of axes 1 and 2. IP54 is valid for cooling fan.

A fan is also recommended to be used if the environmental temperature is high.

How to install a fan is described in section *Installation of cooling fan for motors, axes 1 and 2 (option) on page 74*.

Refitting motors

Use this procedure to refit motors axes 1, 2, 3, 4, 5 and 6.

NOTE!

The procedure contains information how to refit motors on all axes of the robot. Some steps are only applicable to a certain motor. Follow the steps carefully in order not to miss vital information!

	Action	Info
1.	**NOTE!** Before starting the refitting of the motor, first make the necessary preparations!	See: • *Preparations before the refitting of motors on page 241*
2.	**NOTE!** Whenever parting/mating motor and gearbox, the gears may be damaged if excessive force is used!	
3.	Place the motor carefully in the gearbox.	
4.	Fit the motor, making sure the motor pinion is properly mated to the gear in the gearbox.	Make sure that: • the motor is turned the correct way • the pinion or gear of the motor does not get damaged!
5.	**Only applicable to motor axis 3 !** Check that the wire exit holes of motor axis 3 are in the correct position. See illustration!	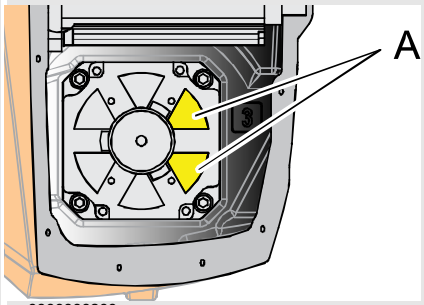 xx0900000300 Parts: • A: Wire exit holes, motor axis 3

Continues on next page

	Action	Info
6.	**Only applicable to motors axes 4, 5 and 6 !** Check that the wire exit holes of motors axes 4, 5 and 6 are in the correct position.	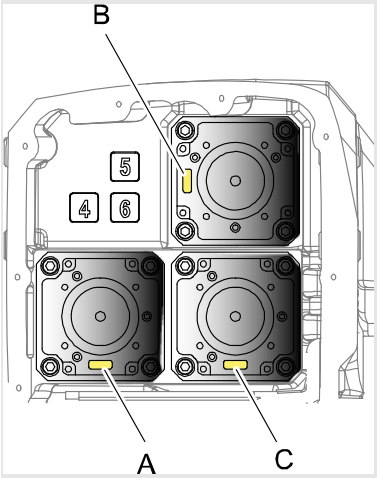 xx0900000062 Parts: • A: Wire exit hole, motor axis 4 • B: Wire exit hole, motor axis 5 • C: Wire exit hole, motor axis 6
7.	Secure the motor with its *attachment screws* and *washers*. **NOTE!** Apply the correct tightening torque!	Tightening torque and attachment screws are specified in the table: • *Tightening torques and attachment screws on page 240*
8.	Disconnect the brake release voltage.	
9.	**Only applicable to motors axes 1 and 2 !** Refit the connection box (if it has been removed). **NOTE!** Make sure that the o-ring is in place!	See the figure in: • *Location of motors, motors axes 1 and 2 on page 236*
10.	**Only applicable to motor axis 3 !** Refit the bracket on motor axis 3.	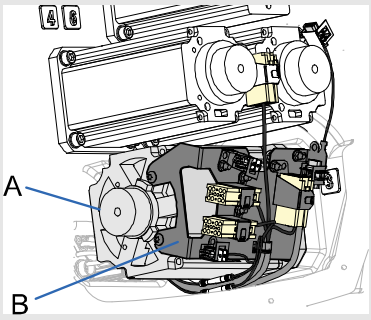 xx0800000390 Parts: • A: Motor axis 3 • B: Bracket

Continues on next page

	Action	Info
11.	Reconnect the motor cables.	
12.	**Only applicable to motor axes 1 and 2 !** Refit the *cable gland* and *motor covers*. Make sure that the *o-ring* is in place!	See the figure in: • *Location of motors, motors axes 1 and 2 on page 236* **NOTE!** Make sure that the cover is tightly sealed!
13.	**Only applicable to motors axes 2 and 3 !** Refill gearbox oil.	How to fill oil in the gearbox is described in sections: • *Changing oil, gearbox axis 2 on page 129* • *Changing oil, gearbox axis 3 on page 132*
14.	**Only applicable to motors axes 3, 4, 5 and 6 !** Check that the gasket on the cover on the armhouse is intact.	If the gasket is damaged, it need to be replaced.
15.	**Only applicable to motors axes 3, 4, 5 and 6 !** Refit the cover in the back of the armhouse with its attachment screws and washers. **WARNING!** The cover on the armhouse must be fitted when the robot is running. It is a vital part for the stability of the robot.	Make sure that the cover is tightly sealed. 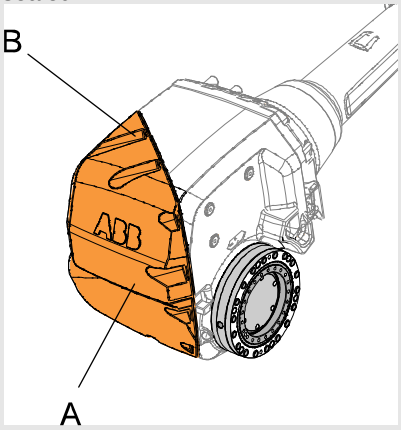 xx0800000389 Parts: • A: Cover • B: Attachment screws M6x25, quality 8.8-A2F (10 pcs) Tightening torque: • 14 Nm
16.	Recalibrate the robot.	Calibration is detailed in a separate calibration manual enclosed with the calibration tools. General calibration information is included in the section *Calibration*.

Continues on next page

Continued

	Action	Info
17.	**DANGER!** Make sure all safety requirements are met when performing the first test run. These are further detailed in the section *DANGER - First test run may cause injury or damage! on page 37*.	

4.8 Gearboxes

4.8.1. Replacing gearbox axis 1

Location of gearbox

The gearbox is located as shown in the figure.

This exploded view only shows the principle of the assembly. The actual replacing is recommended to be done with the robot resting on its side. See illustration in section *Replacing the base:* *Position of robot when replacing base from complete arm system on page 193*.

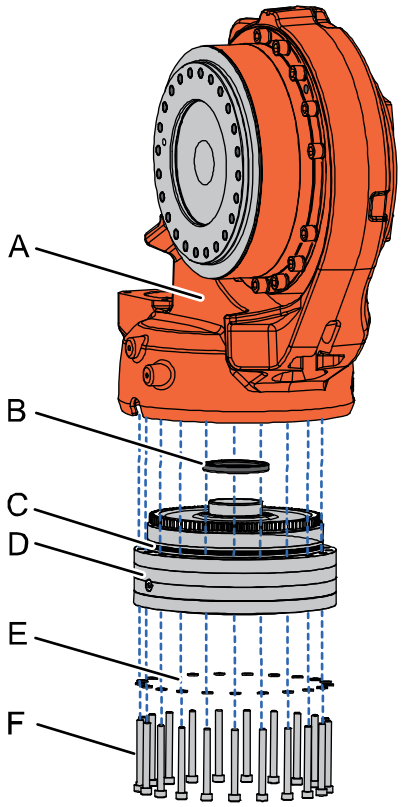

xx0800000400

A	Frame
B	Radial sealing
C	O-ring
D	Gearbox axis 1
E	Washer (21 pcs)
F	Attachment screws M8x80 quality Steel 12.9 Gleitmo (21 pcs)

Continues on next page

Required equipment

Equipment	Note
Standard toolkit	The content is defined in the section *Standard toolkit on page 276*.
Other tools and procedures may be required. See references to these procedures in the step-by-step instructions below.	These procedures include references to the tools required.

Removing gearbox axis 1

Use this procedure to remove the gearbox.

CAUTION!

The gearbox weighs 27 kg!

All lifting equipment used must be sized accordingly.

	Action	Note
1.	**DANGER!** Turn off all electric power, hydraulic and pneumatic pressure supplies to the robot!	
2.	Drain the oil from the gearbox.	How to drain the oil from the gearbox is described in section: • *Draining oil, gearbox axis 1 on page 125*
3.	In order to reach gearbox axis 1, it is necessary first to remove the *base* from the *complete arm system*.	How to remove the base from the complete arm system is described in section: • *Removing the base on page 194*
4.	Fit a *lifting lug* in the *uppermost hole* for the attachment screws securing the base, as shown in the figure.	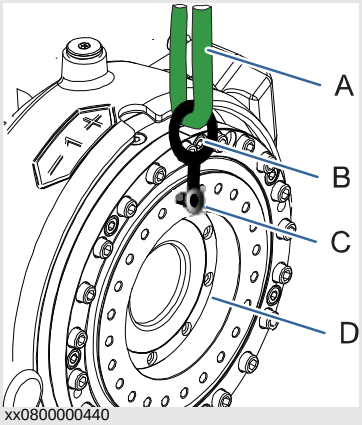 xx0800000440 Parts: • A: Roundsling • B: Lifting lug • C: Uppermost attachment hole for securing the base • D: Gearbox axis 1

Continues on next page

Continued

	Action	Note
5.	Secure the gearbox in an overhead crane or similar.	
6.	Remove the *attachment screws* securing the gearbox.	See the figure in: • *Location of gearbox on page 246*
7.	If necessary use removal tools to remove the gearbox.	**NOTE!** Always use removal tools in pairs diagonal to each other.
8.	Remove the gearbox carefully.	

Refitting gearbox axis 1

Use this procedure to refit the gearbox.

CAUTION!

The gearbox weighs 27 kg!

All lifting equipment used must be sized accordingly.

	Action	Note
1.	**DANGER!** Turn off all electric power, hydraulic and pneumatic pressure supplies to the robot!	
2.	Fit a *lifting lug* in the *uppermost hole* for the attachment screws securing the base, as shown in the figure.	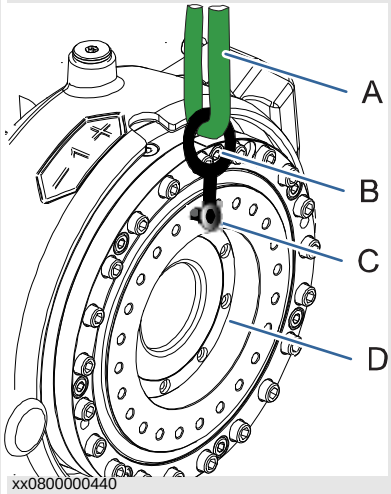 Parts: • A: Roundsling • B: Lifting lug • C: Uppermost attachment hole for securing the base • D: Gearbox axis 1

Continues on next page

	Action	Note
3.	**NOTE!** Check, when fitting the lifting lug, that **both** *oil plugs* will be placed in the correct position after the gearbox is fitted as shown in the figure. The oil plugs shall be placed in the *openings* in the frame.	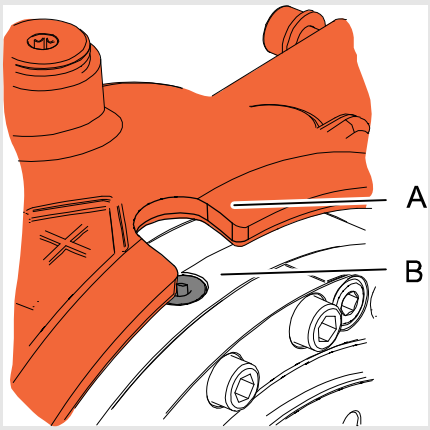 xx0800000441 Parts: • A: Opening for oil plug in frame • B: Oil plug
4.	Fit a guiding pin into one of the holes for the attachment screws.	
5.	Apply grease on the *o-ring*.	See the figure in: • *Location of gearbox on page 246* Replace o-ring if damaged.
6.	Check that all assembly surfaces are clean before refitting the gearbox.	
7.	Lift the gearbox onto the guide pin.	Double check that the oil plugs are in the correct position.
8.	Secure the gearbox with its *attachment screws*.	See the figure in: • *Location of gearbox on page 246* Tightening torque: • 35 Nm
9.	Refit the *base* on the *complete arm system*.	How to refit the base on the complete arm system is described in section: • *Refitting the base on page 197*
10.	Refill oil in the gearbox.	How to fill oil in gearbox is described in section: • *Filling oil, gearbox axis 1 on page 127*
11.	Recalibrate the robot.	Calibration is detailed in a separate calibration manual enclosed with the calibration tools. General calibration information is included in the section *Calibration*.

Continues on next page

Continued

	Action	Note
12.	**DANGER!** Make sure all safety requirements are met when performing the first test run. These are further detailed in the section *DANGER - First test run may cause injury or damage! on page 37*.	

4.8.2. Replacing gearbox axis 2

Location of gearbox axis 2

The gearbox is located as shown in the figure.

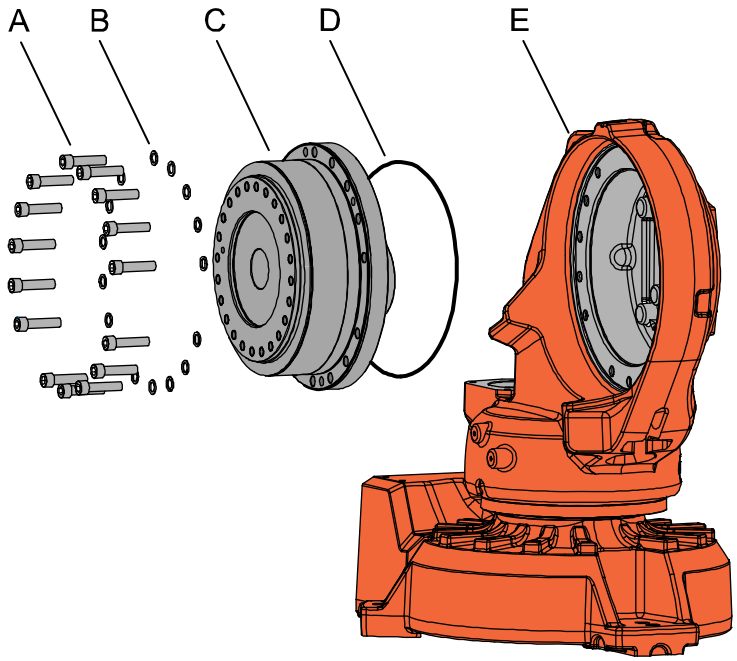

xx0800000438

A	Attachment screws M12x50 quality Steel 12.9 Gleitmo (15 pcs)
B	Washers (15 pcs)
C	Gearbox axis 2
D	O-ring
E	Frame

Required equipment

Equipment	Note
Standard toolkit	The content is defined in the section *Standard toolkit on page 276*.
Other tools and procedures may be required. See references to these procedures in the step-by-step instructions below.	These procedures include references to the tools required.

Continues on next page

Removing gearbox axis 2

Use this procedure to remove the gearbox.

CAUTION!

The gearbox weighs 51 kg! All lifting equipment used must be sized accordingly!

	Action	Note
1.	Move the robot to the position shown in the figure.	 xx0800000336
2.	**DANGER!** Turn off all electric power, hydraulic and pneumatic pressure supplies to the robot!	
3.	Drain the oil from the gearbox.	How to drain the oil from the gearbox is described in section: • *Changing oil, gearbox axis 2 on page 129*
4.	Remove the *cable package* from all axes except in the base.	How to remove the cable package from the frame, lower arm and armhouse is described in sections: • *Removing cable harness in frame on page 166* • *Removing cable harness in lower arm and armhouse on page 167*
5.	Remove the *lower* and *upper* arms from gearbox axis 2.	How to remove the armsystem from gearbox axis 2 is described in section: • *Removing the lower arm on page 221*

Continues on next page

Continued

	Action	Note
6.	Fit a *lifting lug* in the uppermost hole for the attachment screws securing the lower arm to the gearbox.	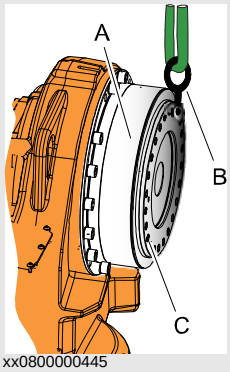 xx0800000445 Parts: • A: Gearbox axis 2 • B: Lifting lug • C: Holes for attachment screws securing the lower arm to gearbox axis 2
7.	Secure the gearbox with a roundsling in an overhead crane or similar.	
8.	Remove the *attachment screws* securing the gearbox.	See the figure in: • *Location of gearbox axis 2 on page 251*
9.	If necessary, use removal tools to remove the gearbox.	**NOTE!** Always use removal tools in pairs diagonal to each other.
10.	Remove the gearbox carefully.	

Continues on next page

Refit gearbox axis 2

Use this procedure to refit the gearbox.

CAUTION!

The gearbox weighs 51 kg! All lifting equipment used must be sized accordingly!

	Action	Note
1.	**DANGER!** Turn off all electric power, hydraulic and pneumatic pressure supplies to the robot!	
2.	Fit a *lifting lug* in the uppermost hole for the attachment screws securing the lower arm to the gearbox.	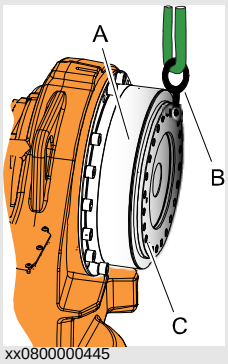 xx0800000445 Parts: • A: Gearbox axis 2 • B: Lifting lug • C: Holes for attachment screws securing the lower arm to gearbox axis 2.
3.	Check that all assembly surfaces are clean before refitting the gearbox.	
4.	Apply some grease on the o-ring before fitting.	See the figure in: • *Location of gearbox axis 2 on page 251*
5.	Fit two guiding pins in opposite holes for the attachment screws.	
6.	Secure the gearbox with a roundsling in an overhead crane or similar and lift it onto the guiding pins.	
7.	Secure the gearbox with its *attachment screws* and *washers*.	See the figure in: • *Location of gearbox axis 2 on page 251* Tightening torque: 110 Nm
8.	Refit the *lower arm*.	How to refit the lower arm is described in section: • *Refitting the lower arm on page 223*

Continues on next page

	Action	Note
9.	Refit the *cable harness*.	How to refit the cable harness in frame, lower arm and armhouse is described in sections: • *Refitting the cable harness in the frame on page 172* • *Refitting the cable harness in the lower arm and armhouse on page 179*
10.	Refill the gearbox with *lubrication oil*.	How to fill the gearbox with oil is described in section: • *Changing oil, gearbox axis 2 on page 129*
11.	Recalibrate the robot.	Calibration is detailed in a separate calibration manual enclosed with the calibration tools. General calibration information is included in the section *Calibration*.
12.	**DANGER!** Make sure all safety requirements are met when performing the first test run. These are further detailed in the section *DANGER - First test run may cause injury or damage! on page 37*.	

4.8.3. Replacing gearbox axis 3

Location of gearbox axis 3

The gearbox is located as shown in the figure.

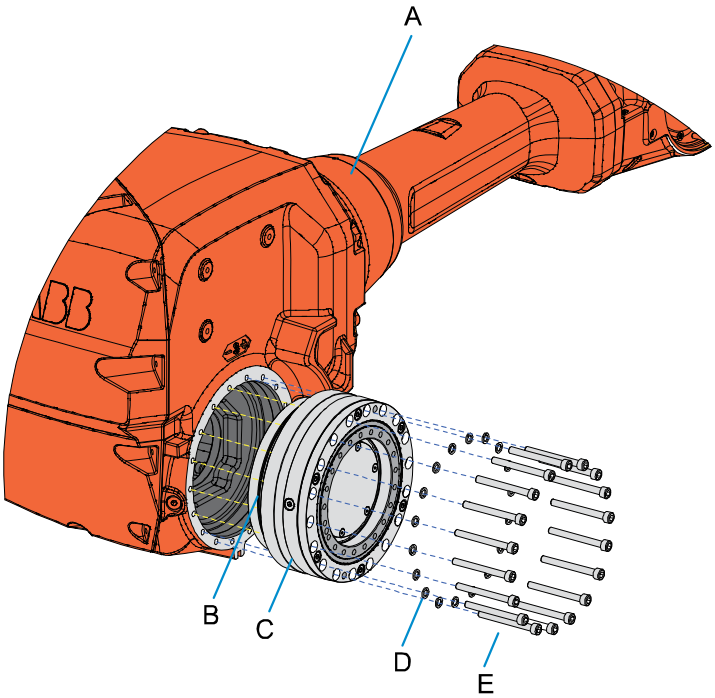

xx0800000398

A	Upper arm
B	O-ring
C	Gearbox, axis 3
D	Washers (18 pcs)
E	Attachment screws M8x80 quality Steel 12.9 Gleitmo (18 pcs)

Required equipment

Equipment	Note
Standard toolkit	The content is defined in the section *Standard toolkit on page 276*.
Other tools and procedures may be required. See references to these procedures in the step-by-step instructions below.	These procedures include references to the tools required.

Continues on next page

Removing gearbox axis 3

Use this procedure to remove the gearbox.

CAUTION!

The gearbox weighs 23 kg!

All lifting equipment used must be sized accordingly.

	Action	Note
1.	Move the robot to the position shown in the figure.	 xx0800000336
2.	**DANGER!** Turn off all electric power, hydraulic and pneumatic pressure supplies to the robot!	
3.	Drain the oil from the gearbox.	How to drain oil from the gearbox is described in section: • *Changing oil, gearbox axis 3 on page 132*
4.	Remove the *cable package*.	How to remove the cable package from lower arm and armhouse is described in section: • *Removing cable harness in lower arm and armhouse on page 167*
5.	Remove the *complete upper arm*.	How to remove the complete upper arm is described in section: • *Removing the complete upper arm on page 200*

Continues on next page

	Action	Note
6.	Fit a *lifting lug* in the uppermost hole for the attachment screws securing the upper arm to the gearbox.	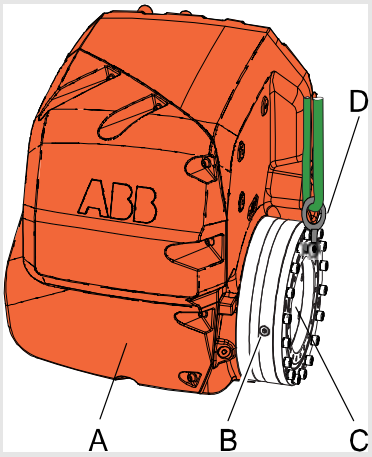 xx0800000446 Parts: • A: Upper arm • B: Position of oil plug • C: Gearbox axis 3 • D: Lifting lug
7.	Secure the gearbox with a roundslng in an overhead crane or similar.	
8.	Remove the *attachment screws* securing the gearbox.	See the figure in: • *Location of gearbox axis 3 on page 256*
9.	If necessary, use removal tools to remove the gearbox.	**NOTE!** Always use removal tools in pairs diagonal to each other.
10.	Remove the gearbox carefully.	

Continues on next page

Refitting the gearbox axis 3

Use this procedure to refit the gearbox.

CAUTION!

The gearbox weighs 23 kg!

All lifting equipment used must be sized accordingly.

	Action	Note
1.	**DANGER!** Turn off all electric power, hydraulic and pneumatic pressure supplies to the robot!	
2.	Fit a *lifting lug* in the uppermost hole for the attachment screws securing the upper arm to the gearbox. **NOTE!** Check, when fitting the lifting lug, that the *oil plug* will be placed in the correct position after the gearbox is fitted. See the figure!	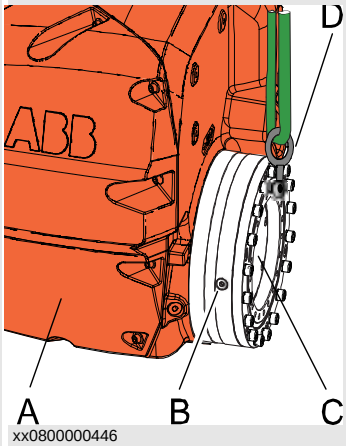 xx0800000446 Parts: • A: Upper arm • B: Position of oil plug • C: Gearbox axis 3 • D: Lifting lug
3.	Check that all assembly surfaces are clean before refitting the gearbox.	
4.	Apply some grease on the o-ring before fitting.	See the figure in: • *Location of gearbox axis 3 on page 256*
5.	Fit two guiding pins in opposite holes of the attachment screws.	
6.	Secure the gearbox with a roundsling in an overhead crane or similar and lift the gearbox onto the guiding pins.	
7.	Secure the gearbox with its *attachment screws* and *washers*.	See the figure in: • *Location of gearbox axis 3 on page 256* Tightening torque: 35 Nm.
8.	Refit the *upper arm*.	How to refit the upper arm is described in section: • *Refitting the complete upper arm on page 203*

Continues on next page

Continued

	Action	Note
9.	Refit the *cable harness*.	How to refit the cable harness in lower arm and armhouse is described in sections: • *Refitting the cable harness in the lower arm and armhouse on page 179*
10.	Refill the gearbox with *lubrication oil*.	How to fill the gearbox with oil is described in section: • *Changing oil, gearbox axis 3 on page 132*
11.	Recalibrate the robot.	Calibration is detailed in a separate calibration manual enclosed with the calibration tools. General calibration information is included in the section *Calibration*.
12.	**DANGER!** Make sure all safety requirements are met when performing the first test run. These are further detailed in the section *DANGER - First test run may cause injury or damage! on page 37*.	

5 Calibration

5.1. Introduction

General

This chapter includes general information about different calibration methods and also details procedures that do not require specific calibration equipment.

When the robot system must be recalibrated, it is done according to the documentation enclosed with the calibration tools.

When to calibrate

The system must be calibrated if any of the following situations occur.

The resolver values are changed

If resolver values are changed, the robot must be recalibrated using the calibration methods supplied by ABB. Calibrate the robot carefully with standard calibration. The different methods are briefly described in the section *Calibration methods on page 262*, and further detailed in separate Calibration manuals.

If the robot has Absolute Accuracy calibration, it is also recommended but not always necessary to calibrate for new Absolute Accuracy.

The resolver values will change when parts affecting the calibration position are replaced on the robot, for example motors, or parts of transmission.

Contents of the revolution counter memory are lost

If the contents of the revolution counter memory are lost, the counters must be updated as detailed in the section *Updating the revolution counter*. This will occur when:

- the battery is discharged
- a resolver error occurs
- the signal between a resolver and measurement board is interrupted
- a robot axis is moved with the control system disconnected

The revolution counters must also be updated after the robot and controller are connected at the first installation.

The robot is rebuilt

If the robot is rebuilt, for example after a crash or when the robot is changed for other reachability, it needs to be recalibrated for new resolver values.

If the robot has Absolute Accuracy calibration, it needs to be calibrated for new Absolute Accuracy.

5.2. Calibration methods

Overview

This section specifies the different types of calibration and the calibration methods that are supplied by ABB.

Types of calibration

Type of calibration	Description	Calibration method
Standard calibration	The calibrated robot is positioned at home position, that is the axes' positions (angles) are set to 0º. Standard calibration data is found in the file calib.cfg, supplied with the robot at delivery. The file identifies the correct resolver/motor position corresponding to the robot home position. From deliveries together with RobotWare 5.0.5 and higher, the data will instead be found on the SMB (serial measurement board) in the robot and not in a separate file.	Calibration Pendulum (standard method) or Levelmeter calibration (alternative method)
Absolute Accuracy calibration (optional)	Based on standard calibration, and besides positioning the robot at home position, the Absolute Accuracy calibration also compensates for: • mechanical tolerances in the robot structure. • deflection due to load. Absolute Accuracy calibration focuses on positioning accuracy in the Cartesian coordinate system for the robot. Absolute Accuracy data is found in the file absacc.cfg, supplied with the robot at delivery. The file replaces the calib.cfg file and identifies motor positions as well as absacc-compensation parameters. From deliveries together with RobotWare 5.0.6 and higher, the data will instead be found on the SMB (serial measurement board) in the robot and not in a separate file. A robot calibrated with AbsAcc has a sticker next to the identification plate of the robot. To regain 100% Absolute Accuracy performance, the robot must be recalibrated for Absolute Accuracy! 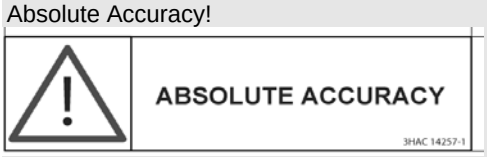 xx0400001197	CalibWare

Continues on next page

Calibration methods

Each calibration method is detailed in a separate manual. Below is a brief description of the methods available.

Calibration Pendulum - standard method

Calibration Pendulum is the standard method for calibration of all ABB robots (except IRB 6400R, IRB 640, IRB 1400H and IRB 4400S) and is also the most accurate method for the standard type of calibration. It is the recommended method in order to achieve proper performance.

Two different routines are available for the Calibration Pendulum method:

- Calibration Pendulum II
- Reference Calibration

The calibration equipment for Calibration Pendulum is delivered as a complete toolkit, including the operating manual for *Calibration Pendulum*, which describes the method and the different routines further.

Levelmeter Calibration - alternative method

Levelmeter Calibration is referred to as the alternative method for calibration of ABB robots because of the less accurate values obtained during calibration. The method uses the same principles as Calibration Pendulum but does not have as good of mechanical tolerances to the toolkit parts as the standard method with Calibration Pendulum.

This method may, after calibration, require modifications in the robot program and is therefore not recommended.

The calibration equipment for Levelmeter Calibration is ordered as separate parts for each robot and the operating manual for *Levelmeter Calibration* is enclosed with the Levelmeter 2000.

CalibWare - Absolute Accuracy calibration

In order to achieve a good positioning in the Cartesian coordinate system, Absolute Accuracy is used as a TCP calibration. The CalibWare tool guides through the calibration process and calculates new compensation parameters. This is further detailed in the application manual *Absolute Accuracy Calibware 2.0*.

If a service operation is done to a robot with Absolute Accuracy, a new absolute accuracy calibration is required in order to establish full performance. For most cases after motor and transmission replacements that do not include taking apart the robot structure, standard calibration is sufficient. Standard calibration also supports wrist exchange.

References

Article numbers for the calibration tools are listed in the section *Special tools on page 277*.

The calibration equipment for Calibration Pendulum is delivered as a complete toolkit, including *Operating manual - Calibration Pendulum*, which describes the method and the different routines further.

5.3. Calibration scale and correct axis position

Introduction

This section specifies the calibration scale positions and/or correct axis position for all robot models.

Calibration marks, IRB 4600

The figures show the calibration scales positions for the IRB 4600 - all variants.

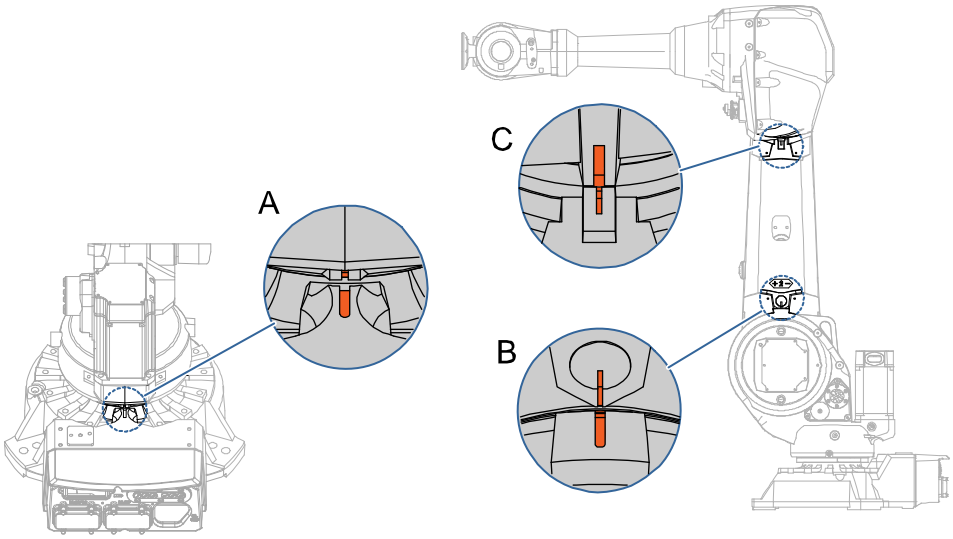

xx0800000312

IRB 4600 - 60/2.05, -45/2.05, 40/2.55, -20/2.50

A	Calibration mark, axis 1
B	Calibration mark, axis 2
C	Calibration mark, axis 3

Continues on next page

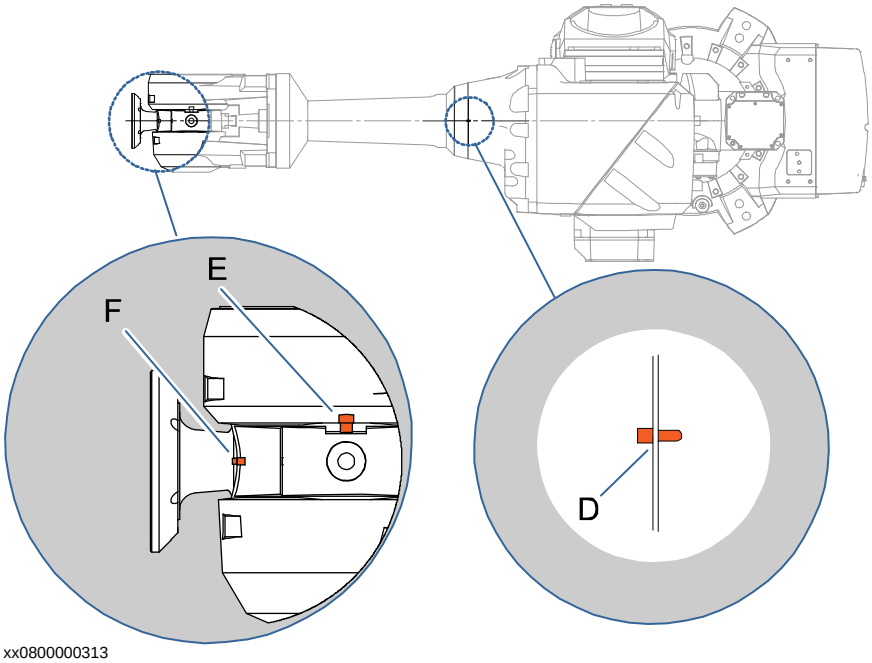

xx0800000313

IRB 4600 - 60/2.05, -45/2.05, 40/2.55

D	Calibration mark, axis 4
E	Calibration mark, axis 5
F	Calibration mark, axis 6

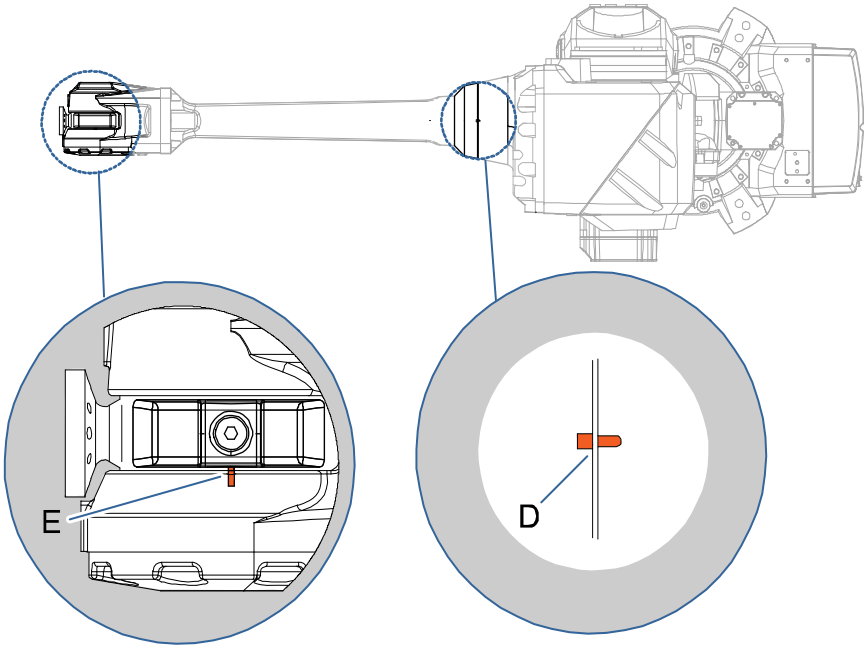

xx0800000320

IRB 4600 -20/2.50

D	Calibration mark, axis 4
E	Calibration mark, axis 5

Continues on next page

Continued

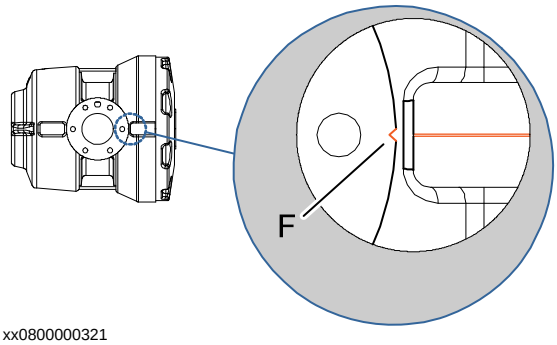

xx0800000321

IRB 4600 -20/2.50

F	Calibration mark, axis 6

6 Decommissioning

6.1. Introduction

Introduction

This section contains information to consider when taking a product, robot or controller, out of operation.

It deals with how to handle potentially dangerous components and potentially hazardous materials.

General

All used grease/oils and dead batteries **must** be disposed of in accordance with the current legislation of the country in which the robot and the control unit are installed.

If the robot or the control unit is partially or completely disposed of, the various parts **must** be grouped together according to their nature (that is, all iron together and all plastic together), and disposed of accordingly. These parts **must** also be disposed of in accordance with the current legislation of the country in which the robot and control unit are installed.

6.2. Environmental information

Hazardous material

The table specifies some of the materials in the robot and their respective use throughout the product.

Dispose of the components properly to prevent health or environmental hazards.

Material	Example application
Batteries, NiCad or Lithium	Serial measurement board
Copper	Cables, motors
Cast iron/nodular iron	Base, lower arm, upper arm
Steel	Gears, screws, base-frame, and so on.
Neodymium	Brakes, motors
Plastic/rubber (PVC)	Cables, connectors, drive belts, and so on.
Oil, grease	Gearboxes
Aluminium	Covers, sync. brackets

Oil and grease

Where possible, arrange for the oil and grease to be recycled. Dispose of via an authorized person/contractor in accordance with local regulations. Do not dispose of oil and grease near lakes, ponds, ditches, down drains or onto soil. Incineration must be carried out under controlled conditions in accordance with local regulations.

Also note that:

- Spills may form a film on water surfaces causing damage to organisms. Oxygen transfer could also be impaired.
- Spillage may penetrate the soil causing ground water contamination.

7 Reference information

7.1. Introduction

General

This chapter includes general information, complementing the more specific information in the different procedures in the manual.

7.2. Applicable safety standards

Safety standards

The robot conforms to the following standards:

- EN ISO 12100-1 Safety of machinery - Basic terminology
- EN ISO 12100-2 Safety of machinery - Technical principles/specifications - Emergency stop
- EN ISO 13850:2006 Safety of machinery - Emergency stop - Principles for design
- EN ISO 13732:2006 Ergonomics of the thermal environment - Part 1
- EN 614-1 Safety of machinery, ergonomic design principles
- EN ISO 10218-1:2006 Robots for industrial environments - Safety requirements - Part 1 Robot [1)]
- EN ISO 60204-1:2005 Safety of machinery - Electrical equipment of machines - Part 1 General requirements
- EN 574 Safety of machinery, two hand control device
- EN 953 Safety of machinery, fixed/movable guards
- EN ISO 13849-1:2006 Safety of machinery, safety related parts of the control system
- EN 61000-6-4:2007 EMC, Part 6-4: Generic standards - Emission standard for industrial environments
- EN 55011 Class A Radiated emission enclosure
- EN 55011 Class A Conducted emission AC Mains
- EN 61000-6-2:2005 EMC, Part 6-2: Generic standards - Immunity for industrial environments
- EN 61000-4-2 Electrostatic discharge immunity test
- EN 61000-4-3 Radiated, radio-frequency, electromagnetic field immunity test
- EN 61000-4-4 Electrical fast transient/burst immunity test
- EN 61000-4-5 Surge immunity test
- EN 61000-4-6 Immunity to conducted disturbances, induced by radio-frequency fields
- EN 61000-4-8 Power frequency magnetic field immunity test
- EN 61000-4-11 Voltage dips, short interruptions and voltage variations immunity test

[1)] There is a deviation from paragraph 6.2 j in that only worst case stop distances and stop times are documented.

7.3. Unit conversion

Converter table

Use the table below to convert units used in this manual.

Quantity	Units		
Length	1 m	3.28 ft	39.37 in
Weight	1 kg	2.21 lb	
Pressure	1 bar	100 kPa	14.5 psi
Force	1 N	0.738 lbf	
Moment	1 Nm	0.738 lbf-tn	
Volume	1 L	0.264 US gal	

7.4. Screw joints

General

This section details how to tighten the various types of screw joints on the robot.

The instructions and torque values are valid for screw joints comprised of metallic materials and do *not* apply to soft or brittle materials.

UNBRAKO screws

UNBRAKO is a special type of screw recommended by ABB for certain screw joints. It features special surface treatment (Gleitmo as described below) and is extremely resistant to fatigue.

Whenever used, this is specified in the instructions, and in such cases, *no other type of replacement screw* is allowed. Using other types of screws will void any warranty and may potentially cause serious damage or injury.

Gleitmo treated screws

Gleitmo is a special surface treatment to reduce the friction when tightening the screw joint. Screws treated with Gleitmo may be reused 3-4 times before the coating disappears. After this the screw must be discarded and replaced with a new one.

When handling screws treated with Gleitmo, protective gloves of nitrile rubber type should be used.

Screws lubricated in other ways

Screws lubricated with Molycote 1000 should *only* be used when specified in the repair, maintenance or installation procedure descriptions.

In such cases, proceed as follows:

1. Apply lubricant to the screw thread.
2. Apply lubricant between the plain washer and screw head.
3. Tighten to the torque specified in the section *Tightening torque on page 273* below. Screw dimensions of M8 or larger must be tightened with a torque wrench. Screw dimensions of M6 or smaller may be tightened without a torque wrench *if* this is done by trained and qualified personnel.

Lubricant	Art. no.
Molycote 1000 (molybdenum disulphide grease)	11712016-618

Continues on next page

Tightening torque

Before tightening any screw, note the following:

- Determine whether a **standard** tightening torque or **special** torque is to be applied. The **standard torques** are specified in the tables below. Any **special torques** are specified in the Repair, Maintenance or Installation procedure descriptions. **Any special torque specified overrides the standard torque!**
- Use the *correct tightening torque* for each type of screw joint.
- Only use *correctly calibrated* torque keys.
- Always *tighten the joint by hand*, and never use pneumatic tools.
- Use the *correct tightening technique*, that is *do not* jerk. Tighten the screw in a slow, flowing motion.
- Maximum allowed total deviation from the specified value is **10%**!

The table below specifies the recommended standard tightening torque for *oil-lubricated screws* with *slotted or cross-recess head screws.*

Dimension	Tightening torque (Nm) Class 4.8, oil-lubricated
M2.5	0.25
M3	0.5
M4	1.2
M5	2.5
M6	5.0

Continues on next page

Continued

The table below specifies the recommended standard tightening torque for *oil-lubricated screws* with *Allen head screws*.

Dimension	Tightening torque (Nm) Class 8.8, oil-lubricated	Tightening torque (Nm) Class 10.9, oil-lubricated	Tightening torque (Nm) Class 12.9, oil-lubricated
M5	6	-	-
M6	10	-	-
M8	24	34	40
M10	47	67	80
M12	82	115	140
M16	200	290	340
M24	725	960	1150

The table below specifies the recommended standard tightening torque for *Molycote-lubricated screws* with *Allen head screws.*

Dimension	Tightening torque (Nm) Class 10.9, Molycote-lubricated	Tightening torque (Nm) Class 12.9, Molycote-lubricated
M8	28	35
M10	55	70
M12	96	120
M16	235	280
M24	790	950

The table below specifies the recommended standard tightening torque for *water and air connectors* when *one* or *both* connectors are made of *brass*.

Dimension	Tightening torque Nm - Nominal	Tightening torque Nm - Min.	Tightening torque Nm - Max.
1/8	12	8	15
1/4	15	10	20
3/8	20	15	25
1/2	40	30	50
3/4	70	55	90

7.5. Weight specifications

Definition

In installation, repair and maintenance procedures, weights of the components handled are sometimes specified. All components exceeding 22 kg (50 lbs) are highlighted in this way.

To avoid injury, ABB recommends the use of lifting equipment when handling components with a weight exceeding 22 kg. A wide range of lifting tools and devices are available for each manipulator model.

Example

Below is an example of how a weight specification is presented, inside a procedure table:

	Action	Note
	CAUTION! The motor weighs 32 kg! All lifting equipment used must be sized accordingly!	

7.6. Standard toolkit

General

All service (repairs, maintenance and installation) procedures contain lists of tools required to perform the specified activity.

All special tools required are listed directly in the procedures while all the tools that are considered standard are gathered in the Standard toolkit and defined in the table below.

This way, the tools required are the sum of the Standard toolkit and any tools listed in the instruction.

Contents, standard toolkit

Qty	Tool
1	Ring-open-end spanner 8-19 mm
1	Socket head cap 2.5-17 mm
1	Torx socket no: 20-60
1	Torque wrench 10-100 Nm
1	Small screwdriver
1	Plastic mallet
1	Ratchet head for torque wrench 1/2
1	Socket head cap no: 5, socket 1/2" bit L 20 mm
1	Socket head cap no: 6, socket 1/2" bit L 20 mm
1	Socket head cap no: 8, socket 1/2" bit L 20 mm
1	Small cutting plier

7.7. Special tools

General

All service instructions contain lists of tools required to perform the specified activity. The required tools are a sum of standard tools, defined in the section *Standard toolkit on page 276*, and of special tools, listed directly in the instructions and also gathered in this section.

Measuring tools, play

The tools listed for measuring the play are used after service work on axes 5 and 6.

Description	Robot variant	Art. no.
Measuring tool, play	IRB 4600 - 60/2.05, -45/2.05, -40/2.55	3HAB1611-6
Measuring tool, play	IRB 4600 - 20/2.50 IRB 2600 - 20/1.65, -12/1.65, 12/1.85	3HAB6337-1

Calibration equipment, Levelmeter (alternative method)

The table below specifies the calibration equipment required when calibrating the robot with the alternative method, Levelmeter Calibration.

Description	Art. no.	Note
Angel bracket	68080011-LP	
Calibration bracket	3HAC13908-9	
Calibration tool ax1	3HAC13908-4	
Levelmeter 2000 kit	6369901-347	Includes one sensor.
Measuring pin	3HAC13908-5	
Sensor fixture	68080011-GM	
Sensor plate	3HAC0392-1	
Sync. adapter	3HAC13908-1	
Turn disk fixture	3HAC68080011-GU	

Calibration equipment, Calibration Pendulum

The table below specifies the calibration equipment needed when calibrating the robot with the Calibration Pendulum method.

Description	Art. no.	Note
Calibration Pendulum toolkit	3HAC15716-1	Complete kit that also includes operating manual.

Turning tool for suspended mounting

The table below specifies the lifting tool required when fitting the robot in a suspended position.

Description	Art. no.
Turning tool (includes lifting instruction)	3HAC034766-001

7.8. Lifting equipment and lifting instructions

General

Many repair and maintenance activities require different pieces of lifting equipment, which are specified in each procedure.

The use of each piece of lifting equipment is *not* detailed in the activity procedure, but in the instruction delivered with each piece of lifting equipment.

This implies that the instructions delivered with the lifting equipment should be stored for later reference.

8 Sparepart list

8.1. Rebuilding parts

Tubular shaft unit

The table shows which *tubular shaft unit* can be used on which variant.

Variant	Tubular shaft unit 3HAC029029-006	Tubular shaft unit 3HAC029029-007	Tubular shaft unit 3HAC029029-008
IRB 4600-60/2.05	X		
IRB 4600-45/2.05	X		
IRB 4600-40/2.55		X	
IRB 4600-20/2.50			X

Lower arm

The table shows which *lower arm* can be used on which variant.

Variant	Lower arm 3HAC030817-006	Lower arm 3HAC030817-005
IRB 4600-60/2.05	X	
IRB 4600-45/2.05	X	
IRB 4600-40/2.55		X
IRB 4600-20/2.50		X

Wrist unit

The table shows which *wrist unit* can be used on which variant.

Variant	Wrist unit 3HAC029030-004	Wrist unit 3HAB9398-1
IRB 4600-60/2.05	X	
IRB 4600-45/2.05	X	
IRB 4600-40/2.55	X	
IRB 4600-20/2.50		X

8.2. Base cover assembly

Spare parts, base cover assembly

Link to *Illustration, base cover assembly on page 281*

Pos	Base cover parts	Spare parts no.
1	Cover	3HAC029250-002
2	Sealing	3HAC029188-001
3	Sealing	3HAC029187-001
4	Protection cover	3HAC13416-1
5	Push-button guard	3HAC6499-1
6	O-Ring (3 pcs)	21522012-428

Continues on next page

Illustration, base cover assembly

Link to *Spare parts, base cover assembly on page 280*

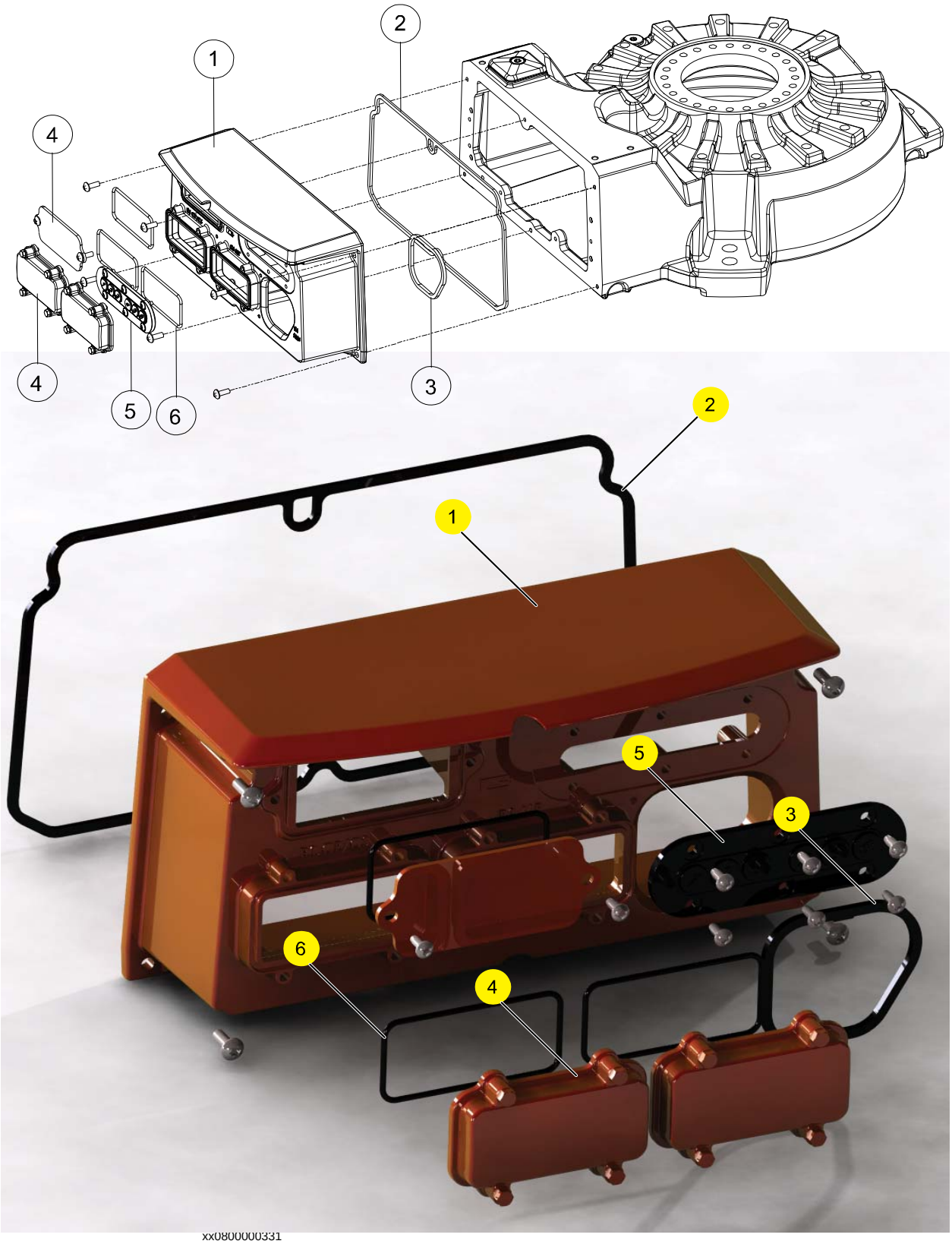

xx0800000331

8.3. Base and frame unit

Spare parts, base and frame unit

Link to *Illustration base and frame unit on page 283*

Pos	Base and frame parts	Spare parts no.
1	Base	3HAC028525-005
2	Frame	3HAC028524-006
3	Radial sealing	3HAB3701-29
4	Gearbox, axis 1 TS245 RHS i=125	3HAC028837-004
(4)	O-ring, gearbox axis 1 (not shown in figure)	3HAB3772-128
5	Gearbox, axis 2 TS 225R i=142.0588	3HAC031958-002
(5)	O-ring, gearbox axis 2 (not shown in figure)	3HAB3772-120
11	Cover plate	3HAC030041-001
12	O-ring	3HAB3772-109
-	Flange sealing (Loctite 574)	12340011-116
231	Cable protection (not shown in the figure)	3HAC027499-004

Continues on next page

Illustration base and frame unit

Link to *Spare parts, base and frame unit on page 282*

8.4. Lower arm and motors

Spare parts list, lower arm and motors

Link to *Illustration, lower arm and motors on page 285*

Pos	Lower arm parts	Spare parts no.
2	Lower arm (IRB 4600-60/2.05, -45/2.05)	3HAC030817-006
2	Lower arm (IRB 4600-40/2.55, -20/2.50)	3HAC031002-005
6	AC Motor with pinion, axis 1	3HAC029031-004
7	AC Motor with pinion, axis 2	3HAC029032-004
29	O-ring	3HAB3772-107
16	Stop pin	3HAC027588-005
17	Bracket	3HAC027499-005
20	O-ring	3HAB3772-104
20	Cover	3HAC025310-002
20	V-ring	3HAB3732-23
20	O-ring	3HAB3772-35
22	Damper	3HAC029243-001
23	Damper	3HAC12320-1
24	Kyodo Yushi TMO 150 (including vessel)	3HAC032140-004
25	Magnetic plug	3HAC16721-1
	Plug IF3820 S06-EXT	3HAC033192-001
29	O-ring	3HAB3772-107
200	Harness basic	3HAC029420-001
200	Harness Customer connections	3HAC029000-001
200	Harness Multibus	3HAC029864-001

Continues on next page

Illustration, lower arm and motors

Link to *Spare parts list, lower arm and motors on page 284*

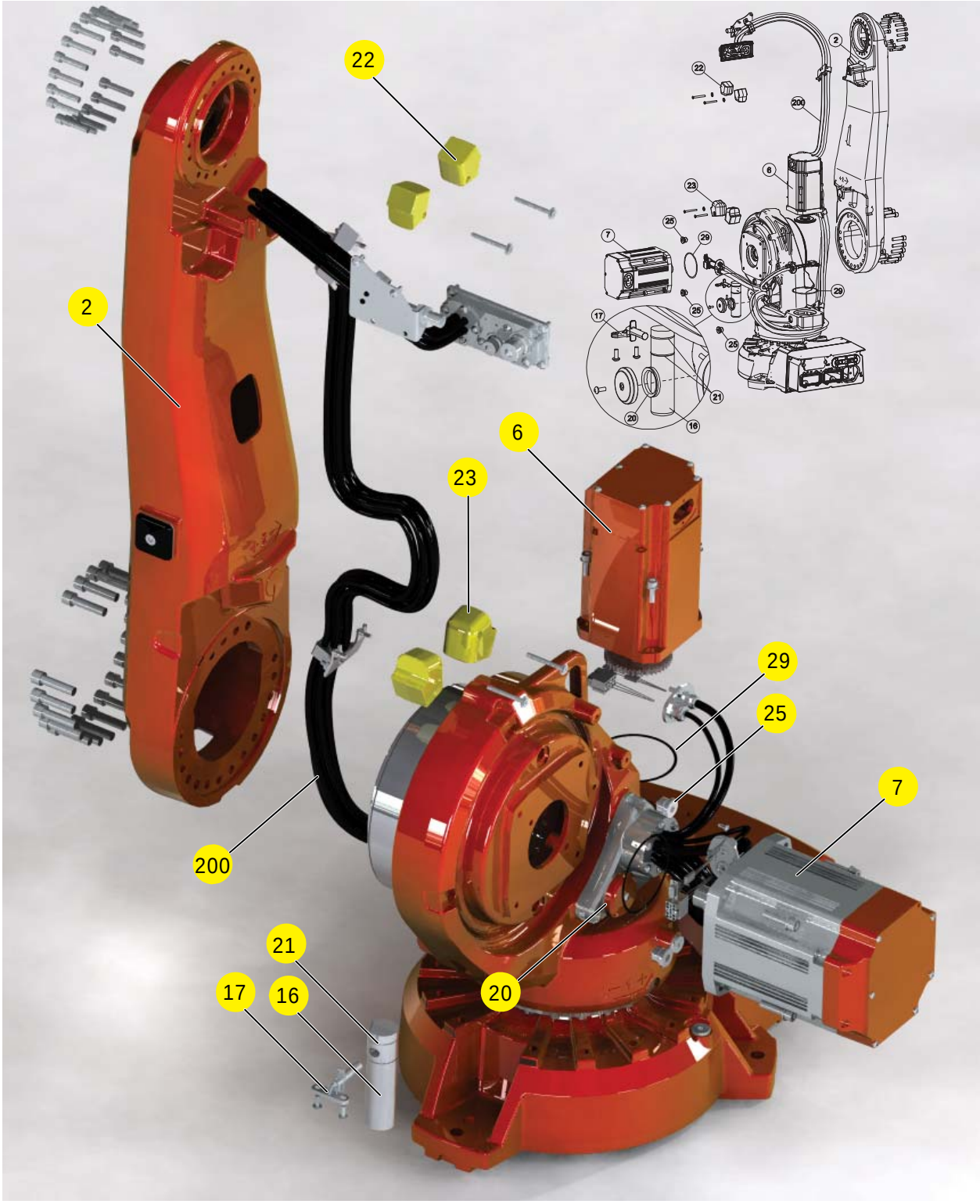

xx0800000332

8.5. Upper arm(2.05/2.50/2.55)

Spare parts, upper arm 2.05

Link to *Illustration upper arm 2.05 on page 288*

Pos	Upper arm parts	Spare parts no.
1	Arm housing	3HAC028633-004
1	Arm housing, type A	3HAC034549-005
2	Parallel pin, hardened (2 pcs)	3HAC3785-2
3	Tubular shaft unit	3HAC029029-006
6	Gasket	3HAC029284-001
7	Wrist complete	3HAC029030-004
10	Rotational AC motor including pinion (axes 4, 5, 6)	3HAC029034-004
11	O-ring (axes 4, 5, 6)	3HAB3772-102
13	Gearbox TS225R i=137 (axis 3)	3HAC031074-004
13	Gearbox, type A	3HAC034535-003
(13)	O-ring, gearbox (not shown in figure)	3HAB3772-129
16	AC Motor with pinion (axis 3)	3HAC031184-003
16	AC Motor with pinion (axis 3), type A	3HAC034647-003
17	O-ring	3HAB3772-107
18	Magnetic plug	2522122-1
23	Washer	3HAC029646-001

Spare parts, upper arm (2.50)

Link to *Illustration upper arm (2.50) on page 289*

Pos	Upper arm parts	Spare parts no.
1	Arm housing	3HAC028633-004
1	Arm housing, type A	3HAC034549-005
2	Parallel pin, hardened (2 pcs)	3HAC3785-2
3	Tubular shaft unit	3HAC029029-007
6	O-ring	3HAB3772-12
7	Wrist complete (including o-ring, pos. 6)	3HAC9398-1
10	AC Motor with pinion (axes 4, 5, 6)	3HAC030211-001
11	O-ring	3HAB3772-102
13	Gearbox TS225R i=137	3HAC031074-004
13	Gearbox, type A	3HAC034535-003
(13)	O-ring, gearbox (not shown in figure)	3HAB3772-129
16	Rotational AC motor including pinion (axis 3)	3HAC031184-003
16	AC motor with pinion (axis 3), type A	3HAC034647-003
17	O-ring	3HAB3772-107
18	Magnetic plug	2522122-1
23	Washer	3HAC029646-001

Continues on next page

Spare parts, upper arm (2.55)

Link to *Illustration upper arm (2.55) on page 290*

Pos	Upper arm parts	Spare parts no.
1	Arm housing	3HAC028633-004
1	Arm housing	3HAC034549-005
2	Parallel pin, hardened (2 pcs)	3HAC3785-2
3	Tubular shaft unit	3HAC029029-008
6	Gasket	3HAC029284-001
7	Wrist complete	3HAC029030-004
10	Rotational AC motor including pinion (axes 4, 5, 6)	3HAC029034-004
11	O-ring (axes 4, 5, 6)	3HAB3772-102
13	Gearbox TS225R i=137	3HAC031074-004
13	Gearbox, type A	3HAC034535-003
(13)	O-ring, gearbox (not shown in figure)	3HAB3772-129
16	AC Motor w pinion (axis 3)	3HAC031184-003
16	AC Motor with pinion (axis 3), type A	3HAC034647-003
17	O-ring	3HAB3772-107
18	Magnetic plug	2522122-1
23	Washer	3HAC029646-001

Spare parts, cover arm housing

Link to *Illustration cover arm housing on page 291*

Pos	Cover arm housing parts	Spare parts no.
1	Cover, Arm housing	3HAC028763-003
2	Gasket	3HAC029312-001
3	ABB Logotype	3HAC5089-1
4	Warning sign	3HAC1589-1

Spare parts, upper arm (gearbox oil in vessel)

Gearbox	Oil type	Spare parts no.
Gearbox axis 4	Mobilgear XP 320	11712016-604
Gearbox axes 5 - 6	Optimol Optigear BM 100	3HAC0860-1

Continues on next page

8.5. Upper arm(2.05/2.50/2.55)

Continued

Illustration upper arm 2.05

Link to *Spare parts, upper arm 2.05 on page 286*

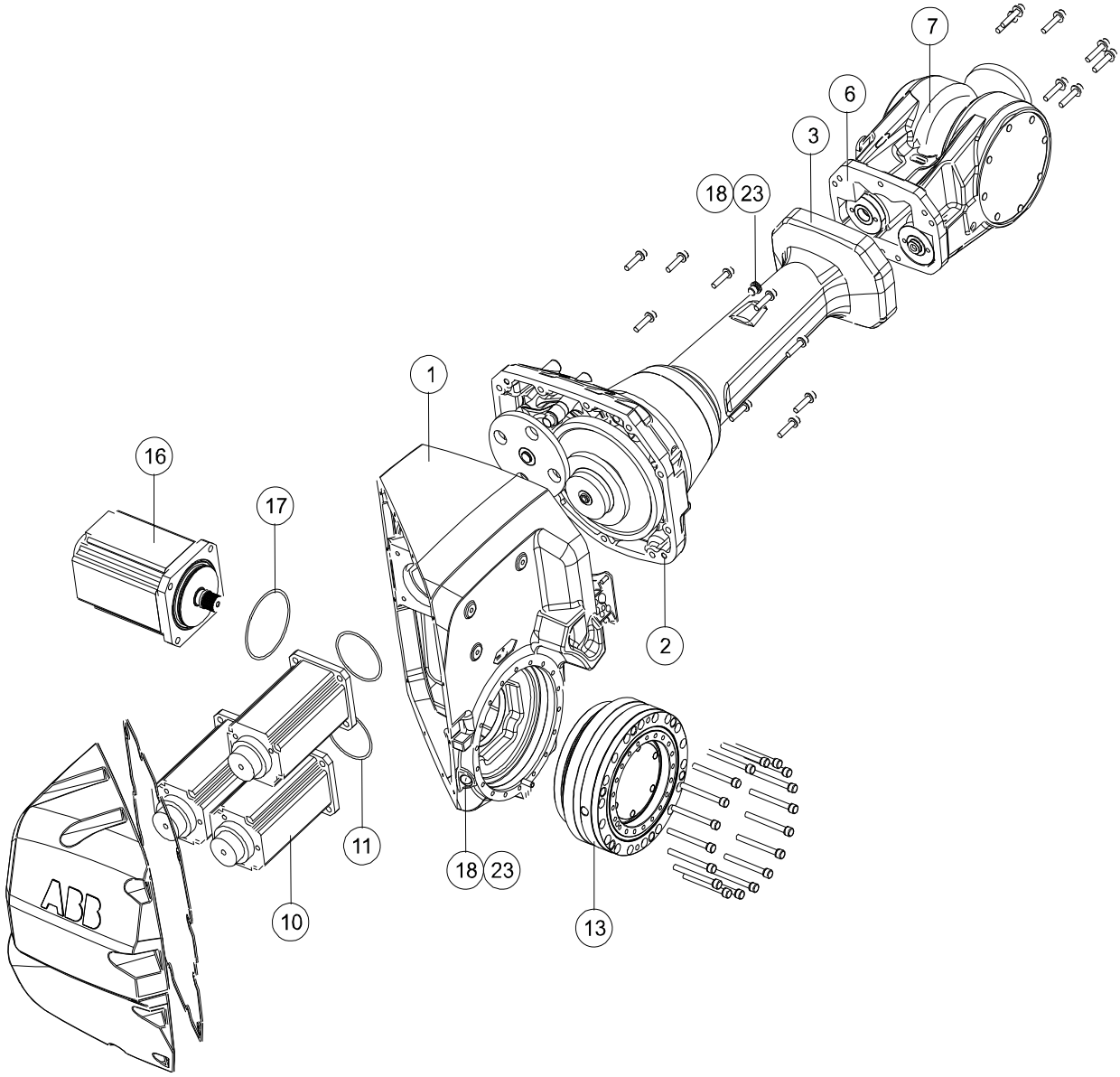

xx0800000317

Continues on next page

Illustration upper arm (2.50)

Link to *Spare parts, upper arm (2.50) on page 286*

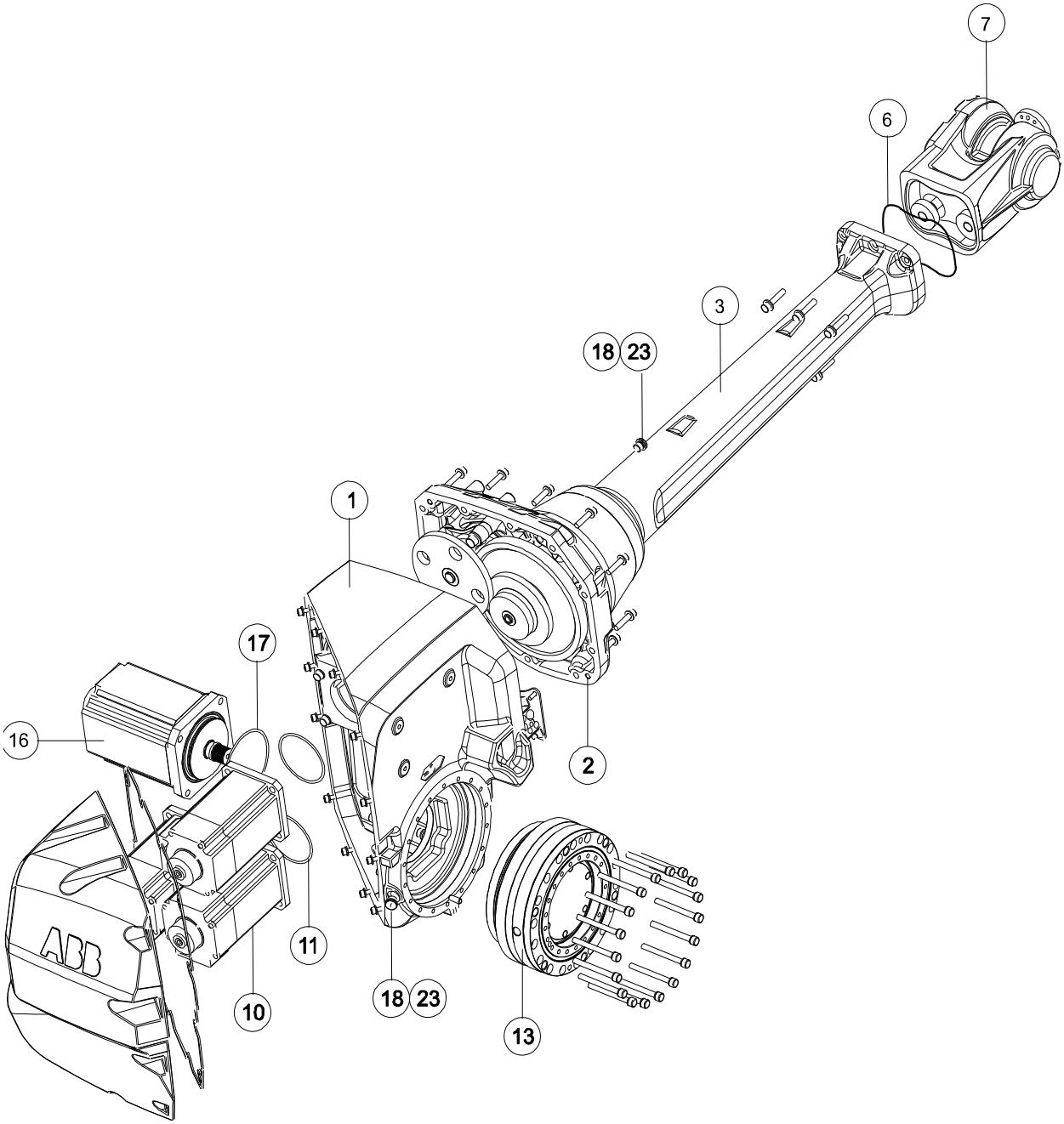

xx0800000358

Continues on next page

8.5. Upper arm(2.05/2.50/2.55)

Continued

Illustration upper arm (2.55)

Link to *Spare parts, upper arm (2.55) on page 287*

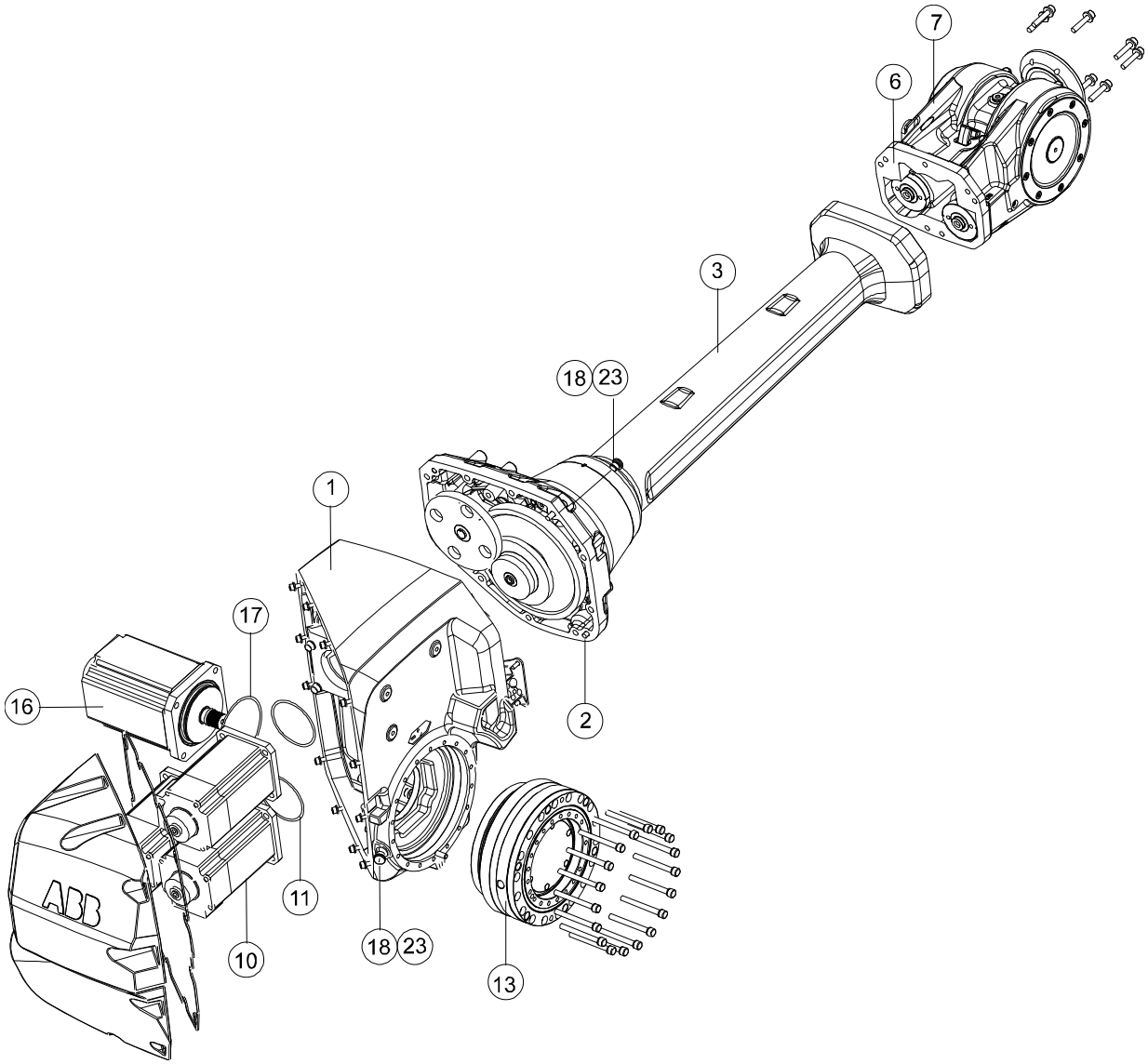

xx0800000364

Continues on next page

Illustration cover arm housing

Link to *Spare parts, cover arm housing on page 287*

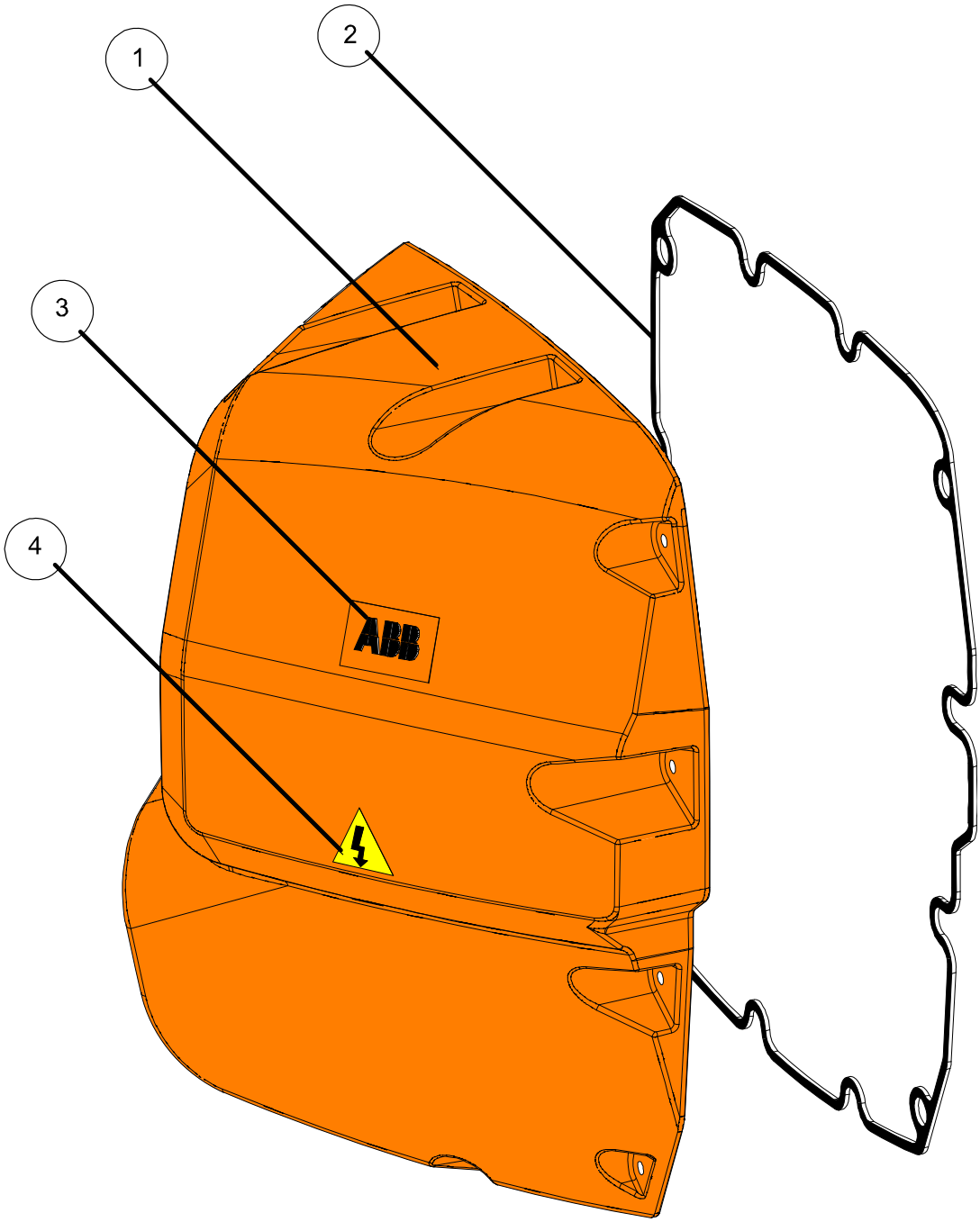

xx0800000375

8.6. Wrist unit (12/20 kgand 60kg)

Introduction

The spare parts in this section covers wrists 12/20 kg and 60 kg.

Spare parts wrist 60 kg

Link to *Illustration wrist unit, 60 kg (IRB 4600 -60/2.05, -45/2.05, -40/2.55) on page 293*

Pos	Wrist parts	Spare parts no.
1	Wrist, complete	3HAC029030-004
	Pos. 2-7 are included in Wrist complete	
2	Gasket	3HAC029284-001
4	Magnetic plug	2522122-1
5	Washer	3HAC029646-001
6	VK-Cover	3HAA2166-21
7	Damper axis 5	3HAC029256-001

Spare parts wrist 12/20 kg

Link to *Spare parts wrist 12/20 kg on page 292*

Pos	Wrist parts	Spare parts no.
1	Wrist complete	3HAB9398-1

Continues on next page

Illustration wrist unit, 60 kg (IRB 4600 -60/2.05, -45/2.05, -40/2.55)

Link to *Spare parts wrist 60 kg on page 292*

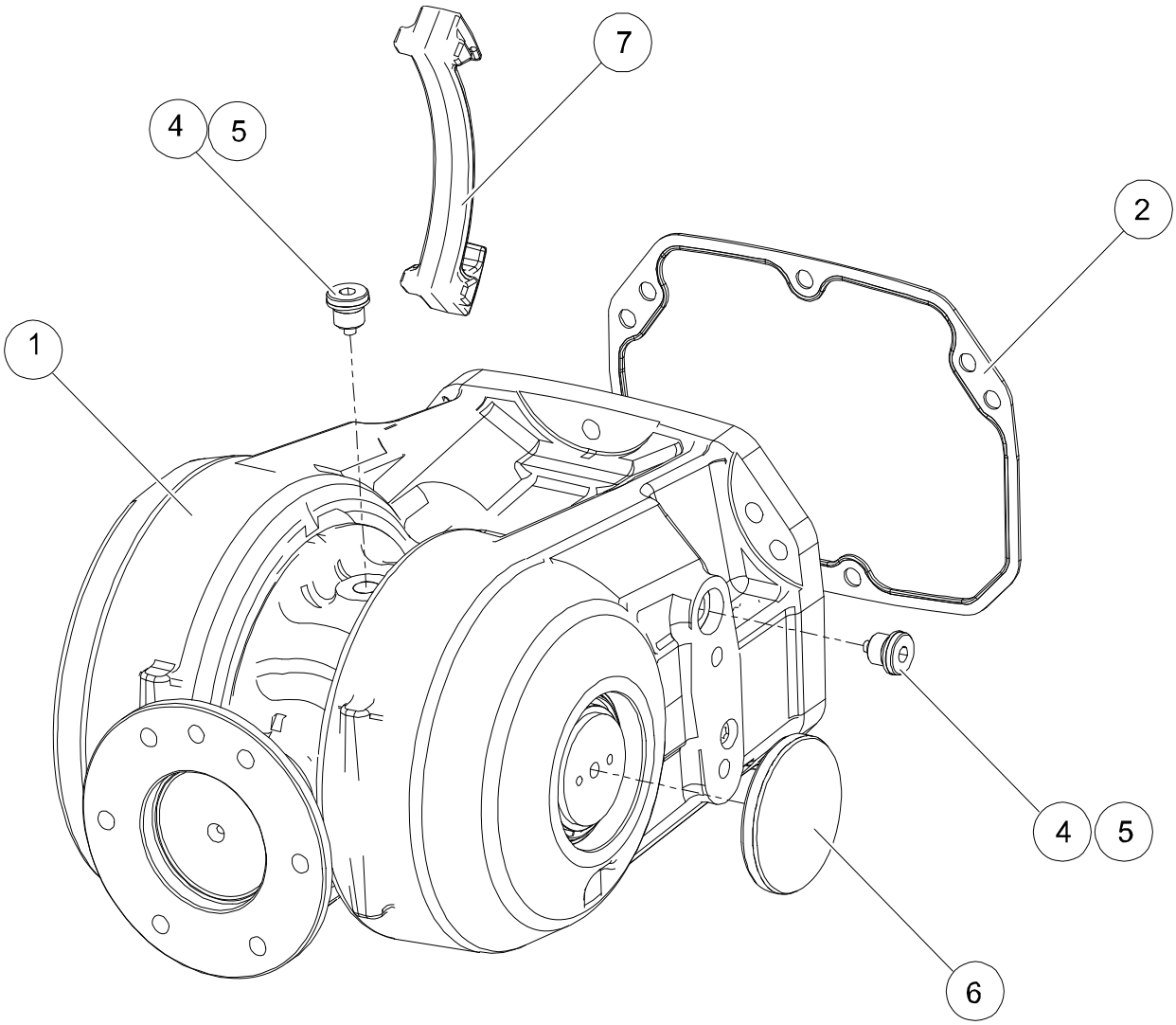

xx0800000318

Continues on next page

Illustration wrist 12/20 kg

Wrist 12/20 kg is used on variant IRB 4600-20/2.50.

Link to *Spare parts wrist 12/20 kg on page 292*

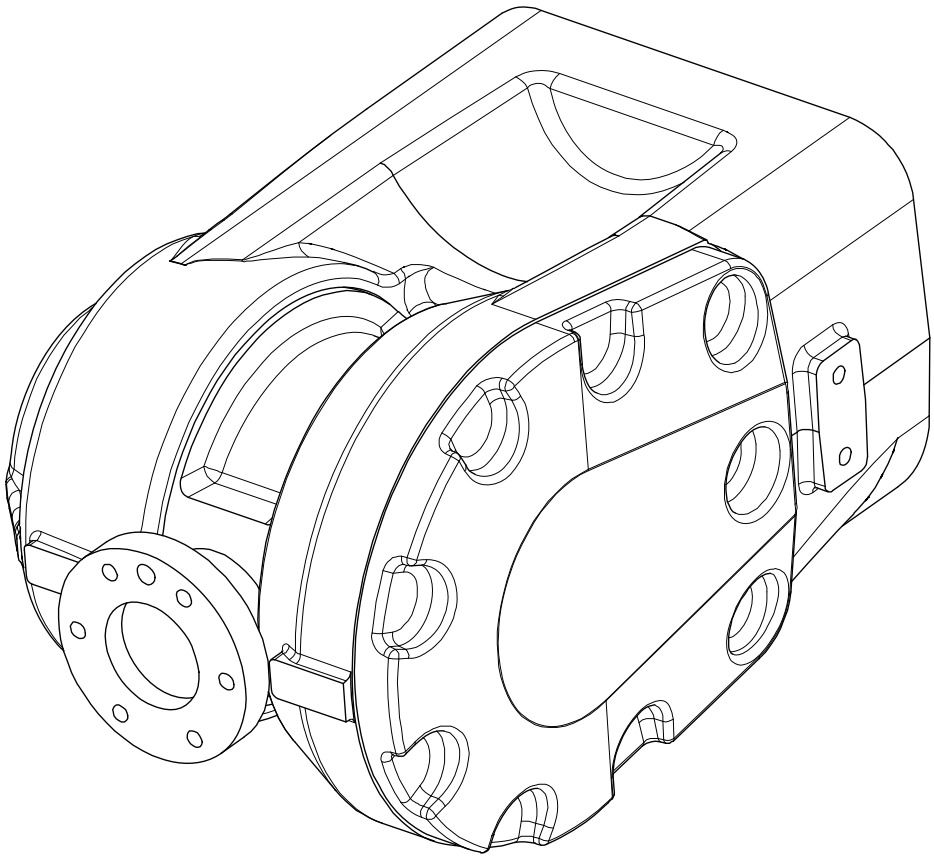

xx0800000369

8.7. Electrical connections

Spare parts list, electrical connections

Link to *Illustration electrical connections on page 296*

Pos	Spare parts	Spare parts no.
234	Connection Box FS130	3HAC029297-002
243	O-ring (2 pcs)	3HAB3772-110
238	Cover Box FS130	3HAC029302-002
239	Connection Box FS180	3HAC029299-002
244	O-ring (2 pcs)	3HAB3772-111
242	Cover Box FS180	3HAC029303-002
226	Brake release unit with buttons, DSQC 536	3HAC16035-1
222	Battery	3HAC16831-1
201	Harness basic	3HAC029420-001
201	Harness Customer connections	3HAC029000-001
201	Harness Multibus	3HAC029864-001
	SMB unit	3HAC031851-001

Continues on next page

Continued

Illustration electrical connections

Link to *Spare parts list, electrical connections on page 295*

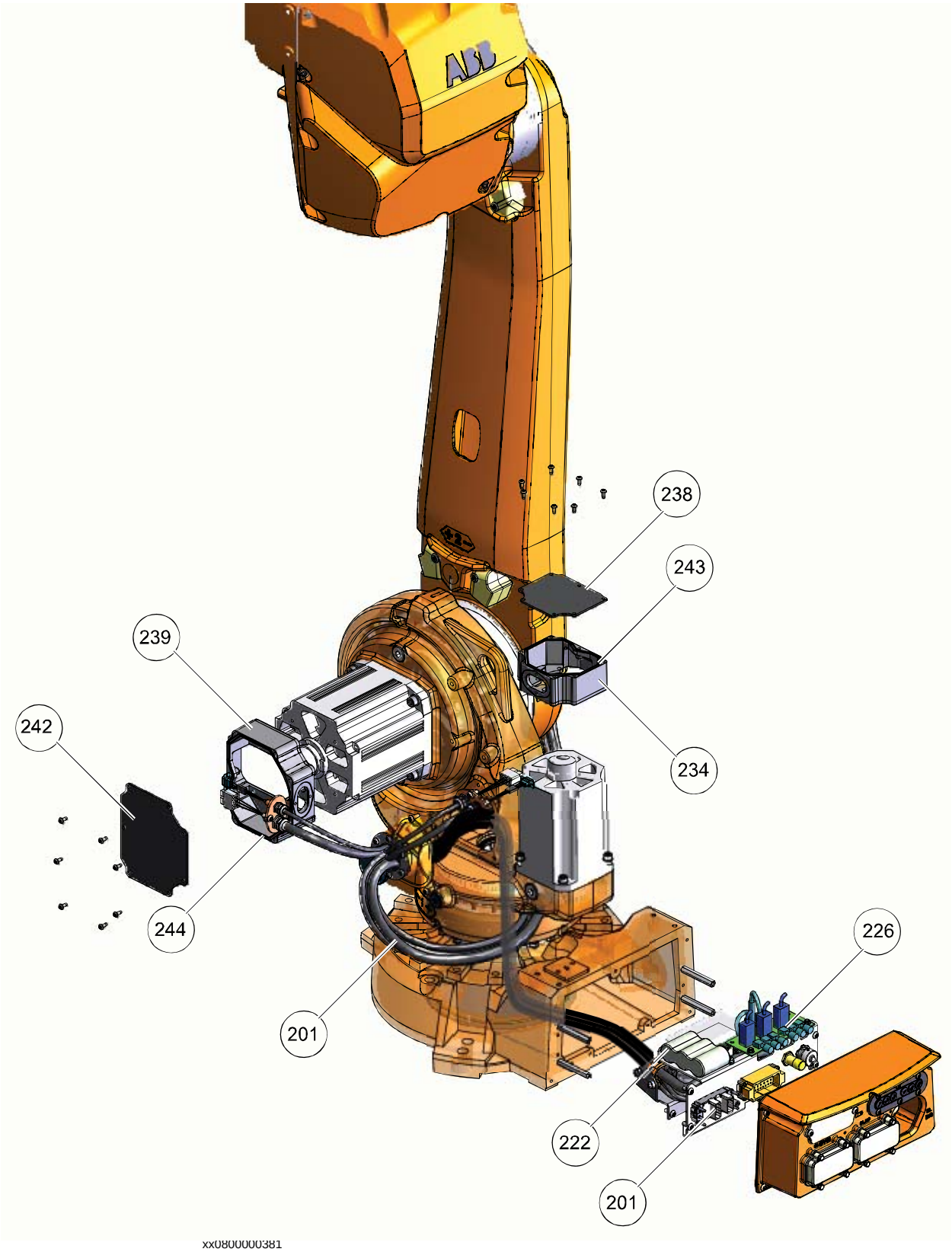

xx0800000381

8.8. Options

Spare parts options

Option no.	Spare parts	Spare parts no.
213-1	Safety lamp	3HAC022235-001
87-1	Cooling fanaxis 1, set	3HAC033857-002
88-1	Cooling fan axis 2, set	3HAC033859-002
224-2	Expansion container with cover (set) (Suspended position)	3HAC033862-005
864-1	Resolver connection 7th axis	3HAC033861-002
239-1	CP/CS Proc1, base	3HAC16667-1
28-1	Working range limit, axis 1	3HAC033134-001
	Connector set on base	3HAC033181-001
	Connector set R2.CP/R2.CS	3HAC025396-001
	Additional mechanical stop set, axis 1	3HAC033134-001

9 Circuit diagram

9.1. Introduction

Overview

This chapter includes the circuit diagram for the robot.

The information in this document is subject to change without notice and should not be construed as a commitment by ABB. ABB assumes no responsibility for any errors that may appear in this document.

Except as may be expressly stated anywhere in this document, nothing herein shall be construed as any kind of guarantee or warranty by ABB for losses, damages to persons or property, fitness for a specific purpose or the like.

In no event shall ABB be liable for incidental or consequential damages arising from use of this document.

This document and parts thereof must not be reproduced or copied without ABB's written permission, and contents therof must not be imparted to a third party nor be used for any unauthorized purpose. Contravention will be prosecuted.

Additional copies of this document may be obtained from ABB at its then current charge.

ABB Automation Technologies AB
Robotics
SE-721 68 Västerås
Sweden

Table of contents

ABB Contents1

Valid for:
This circuit diagram is valid for the following cable harness assemblies:
1) 3HAC029420-001 Cable harness, basic.
2) 3HAC4050-1 Signal cable SMB.
3) 3HAC030936-001 Cable harness ax.7.
4) 3HAC022235-001 Lamp unit.
5) 3HAC033857-001 Cooling fan ax.1.
6) 3HAC033859-001 Cooling fan ax.2.
7) 3HAC029000-001 Cable harness, customer connection.
8) 3HAC029864-001 Cable harness, multibus.

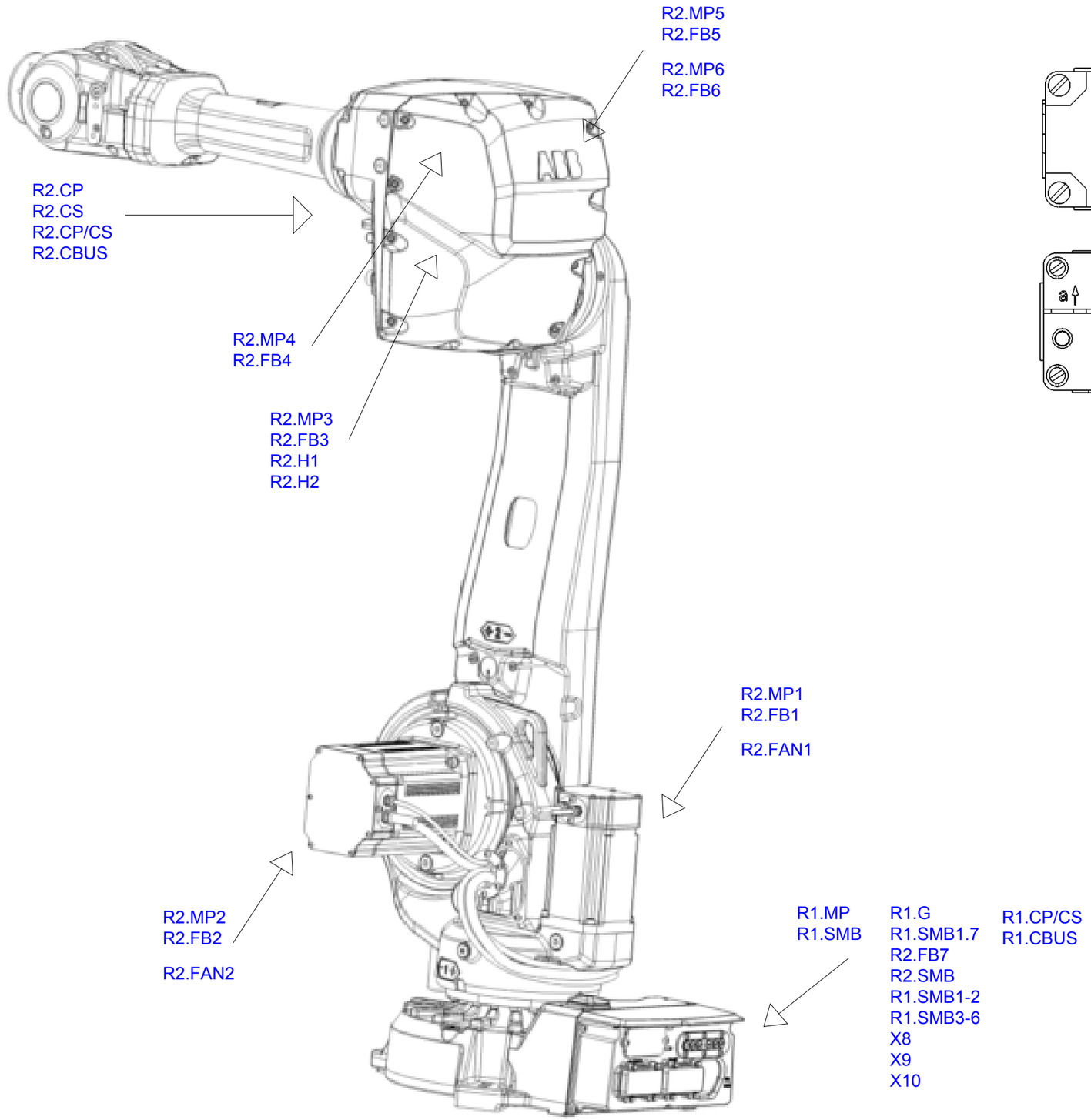

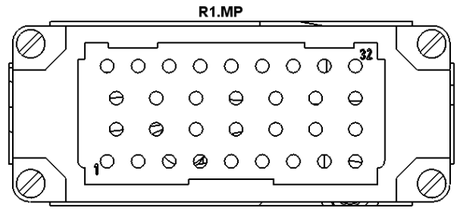

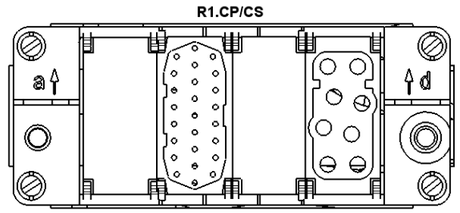

Latest revision:		Lab/Office: PRMP	IRB 4600 Connection point location	Status: 2009-05-06 APPROVED	Plant: = IRB 4600 Location: + Manipulator Sublocation: +
Prepared by, date: Erik Mesaros	Approved by, date: Johan Moraeus			Document no. 3HAC029038-003	Rev. Ind 02

M	Motor
R	Resolver
G	Battery Pack
BU	Brake Release Unit
FB	Feedback unit
SMB	Serial Measurment Board
Keypin	Location pin to avoid mismatch

Protective Earth

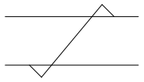

Twisted wires

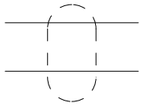

Screened wires

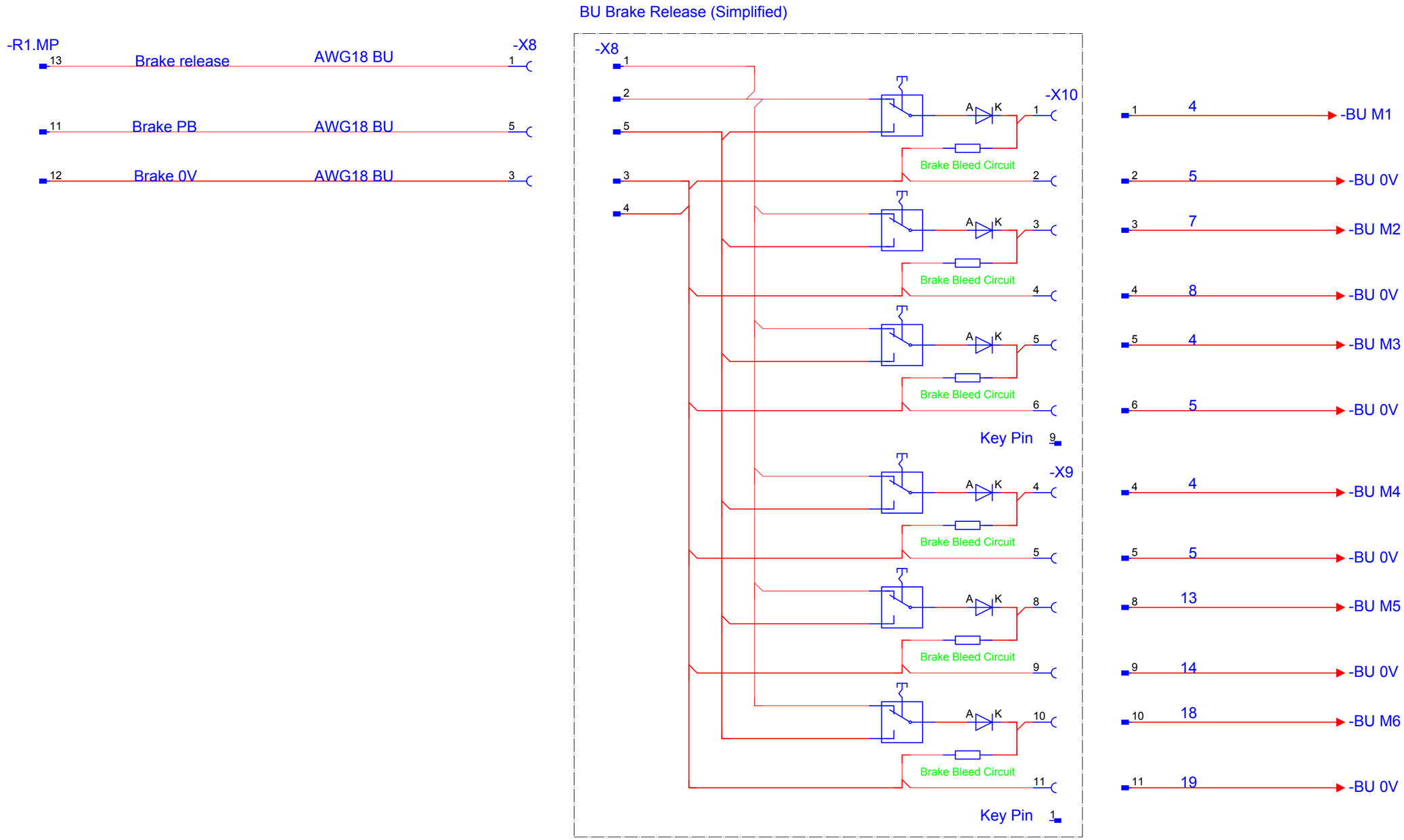

Latest revision:		Lab/Office: PRMP	IRB 4600 Brake Release Unit	Status: 2009-05-06 APPROVED	Plant: = IRB 4600 Location: + BU Sublocation: +
Prepared by, date: Erik Mesaros	Approved by, date: Johan Moraeus			Document no. 3HAC029038-003	Rev. Ind 02
					Page 10 Next +SMB/20 Total 16

2

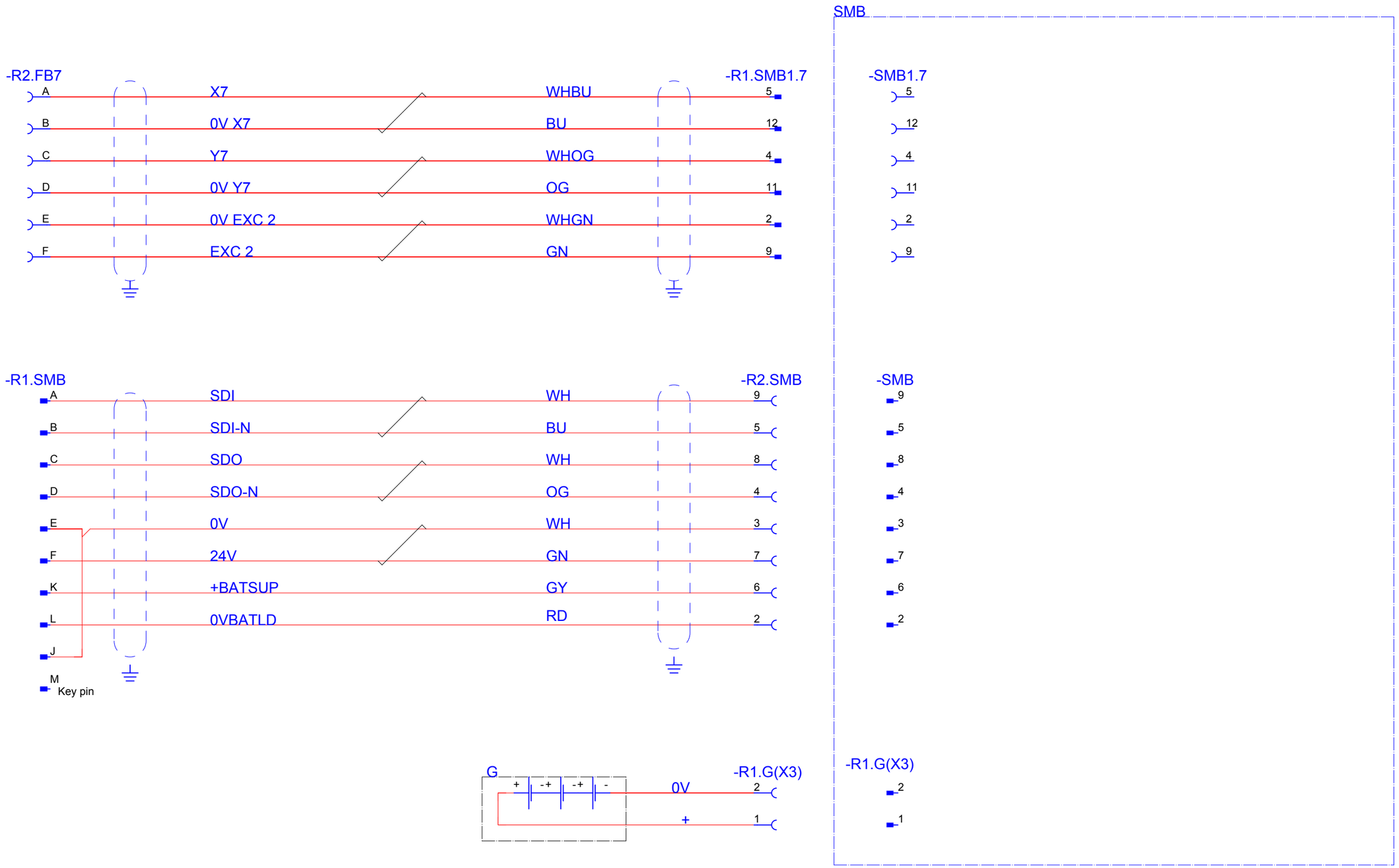

Latest revision:		Lab/Office: PRMP	IRB 4600 Serial Measuring Board	Status: 2009-05-06 APPROVED	Plant: = IRB 4600 Location: + SMB Sublocation: +
Prepared by, date: Erik Mesaros	Approved by, date: Johan Moraeus			Document no. 3HAC029038-003	Rev. Ind 02
					Page 20 Next +Axis 1/30 Total 16

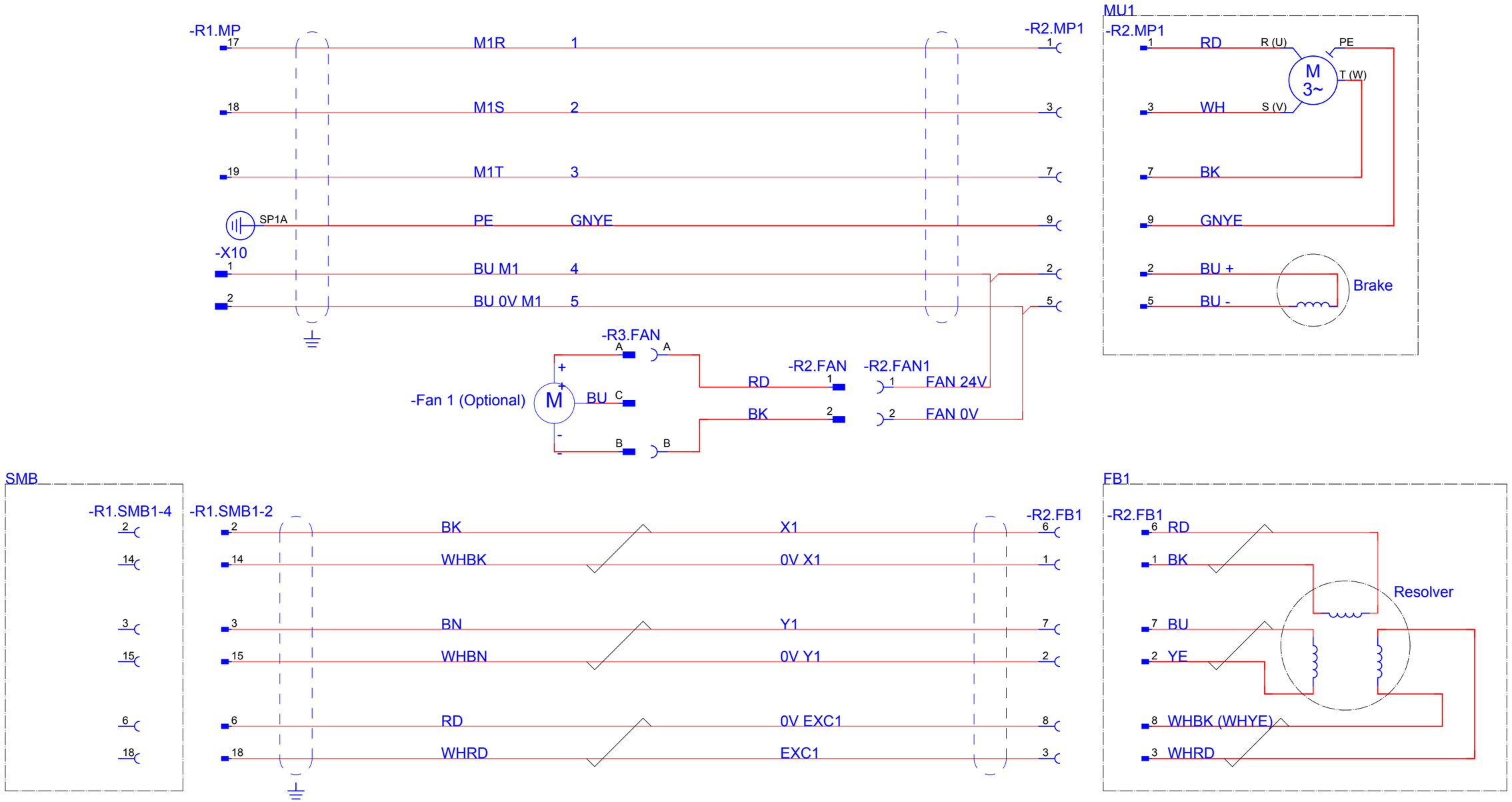

Latest revision:		Lab/Office: PRMP	IRB 4600 Axis 1	Status: 2009-05-06 APPROVED	Plant: = IRB 4600 Location: + Axis 1 Sublocation: +
Prepared by, date: Erik Mesaros	Approved by, date: Johan Moraeus			Document no. 3HAC029038-003	Rev. Ind 02

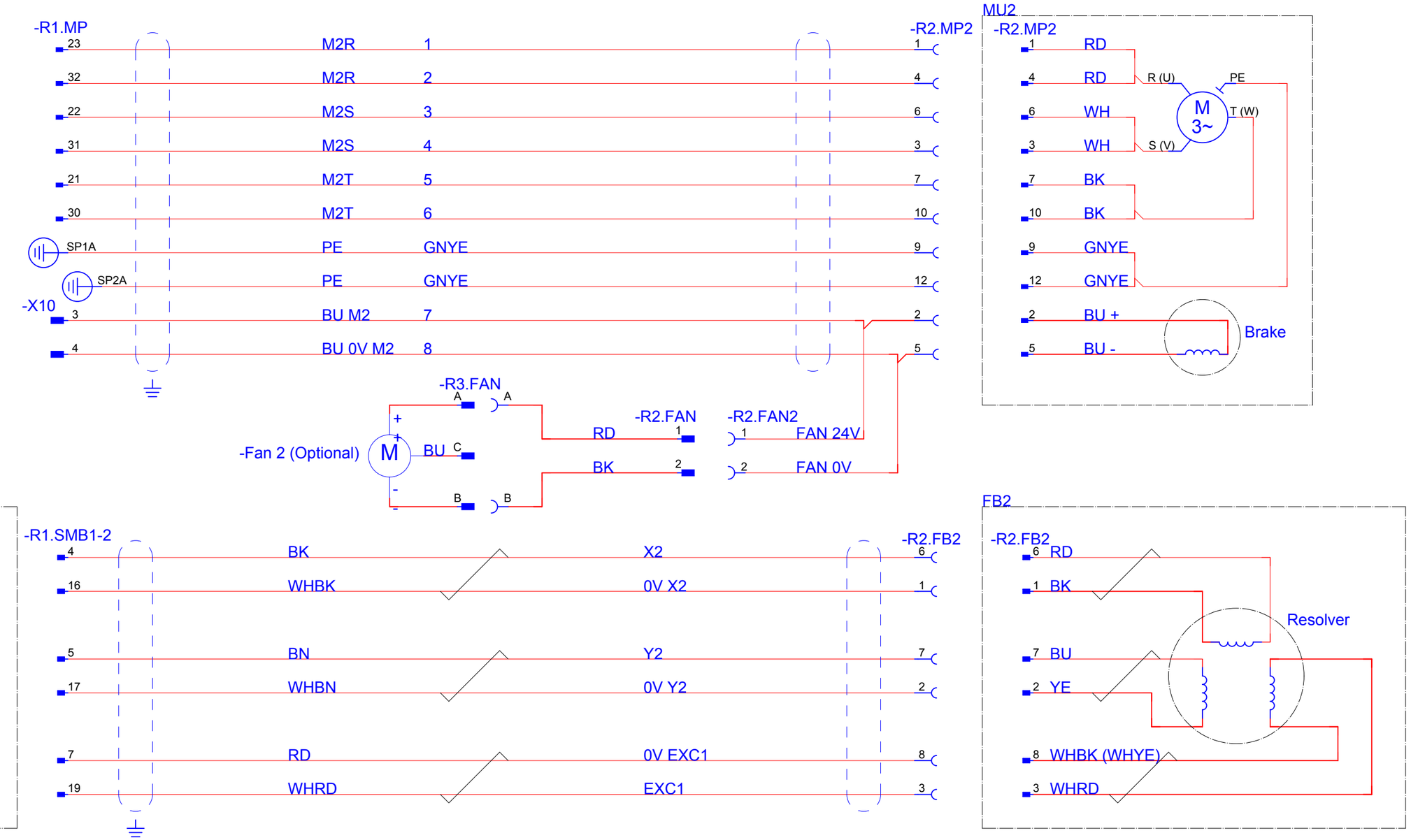

Latest revision:		Lab/Office: PRMP	IRB 4600 Axis 2	Status: 2009-05-06 APPROVED	Plant: = IRB 4600 Location: + Axis 2 Sublocation: +
Prepared by, date: Erik Mesaros	Approved by, date: Johan Moraeus			Document no. 3HAC029038-003	Rev. Ind 02

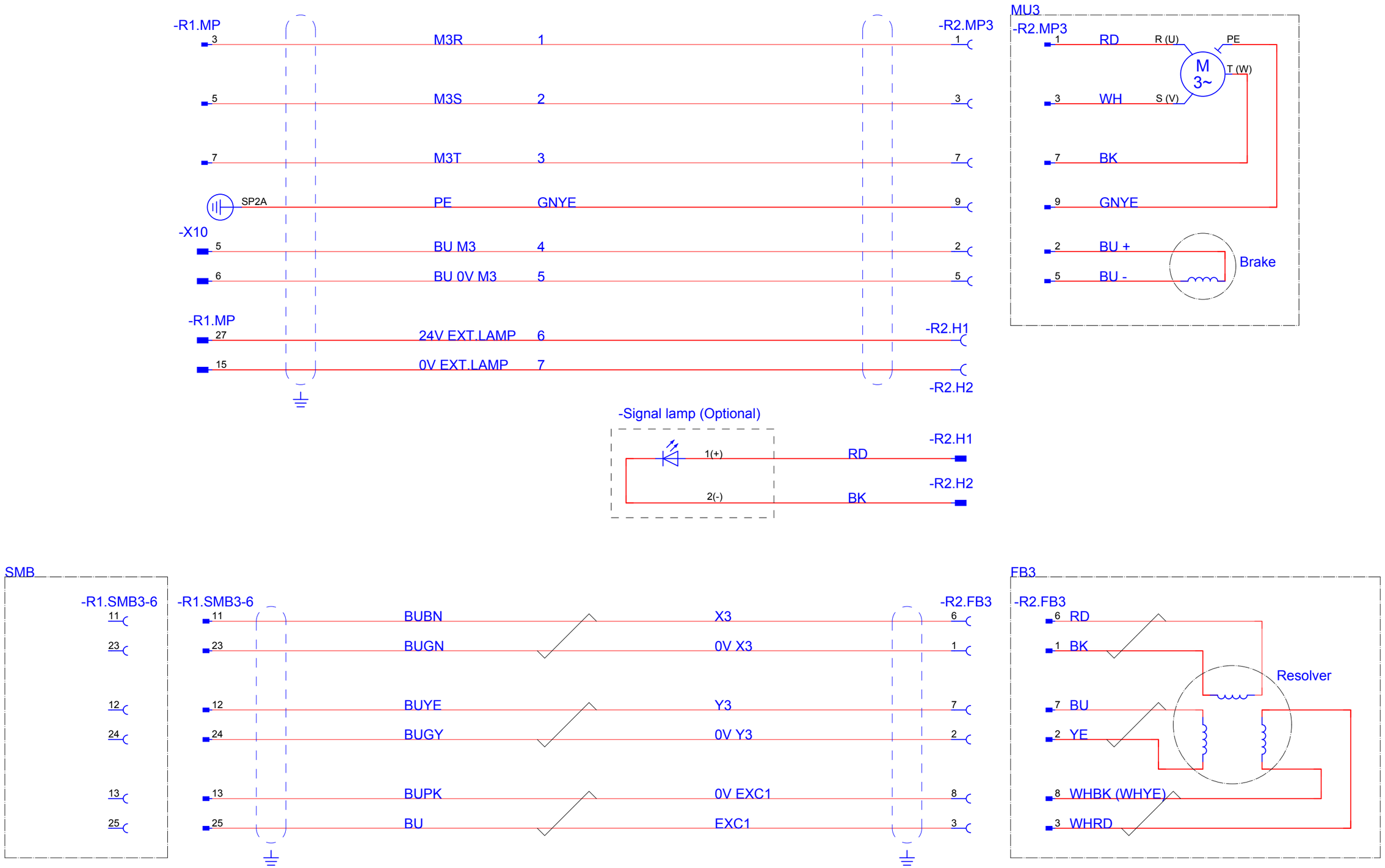

Latest revision:	ABB	Lab/Office: PRMP	IRB 4600 Axis 3	Status: 2009-05-06 APPROVED
Prepared by, date: Erik Mesaros	Approved by, date: Johan Moraeus			Document no. 3HAC029038-003

Plant: = IRB 4600
Location: + Axis 3
Sublocation: +

Rev. Ind 02

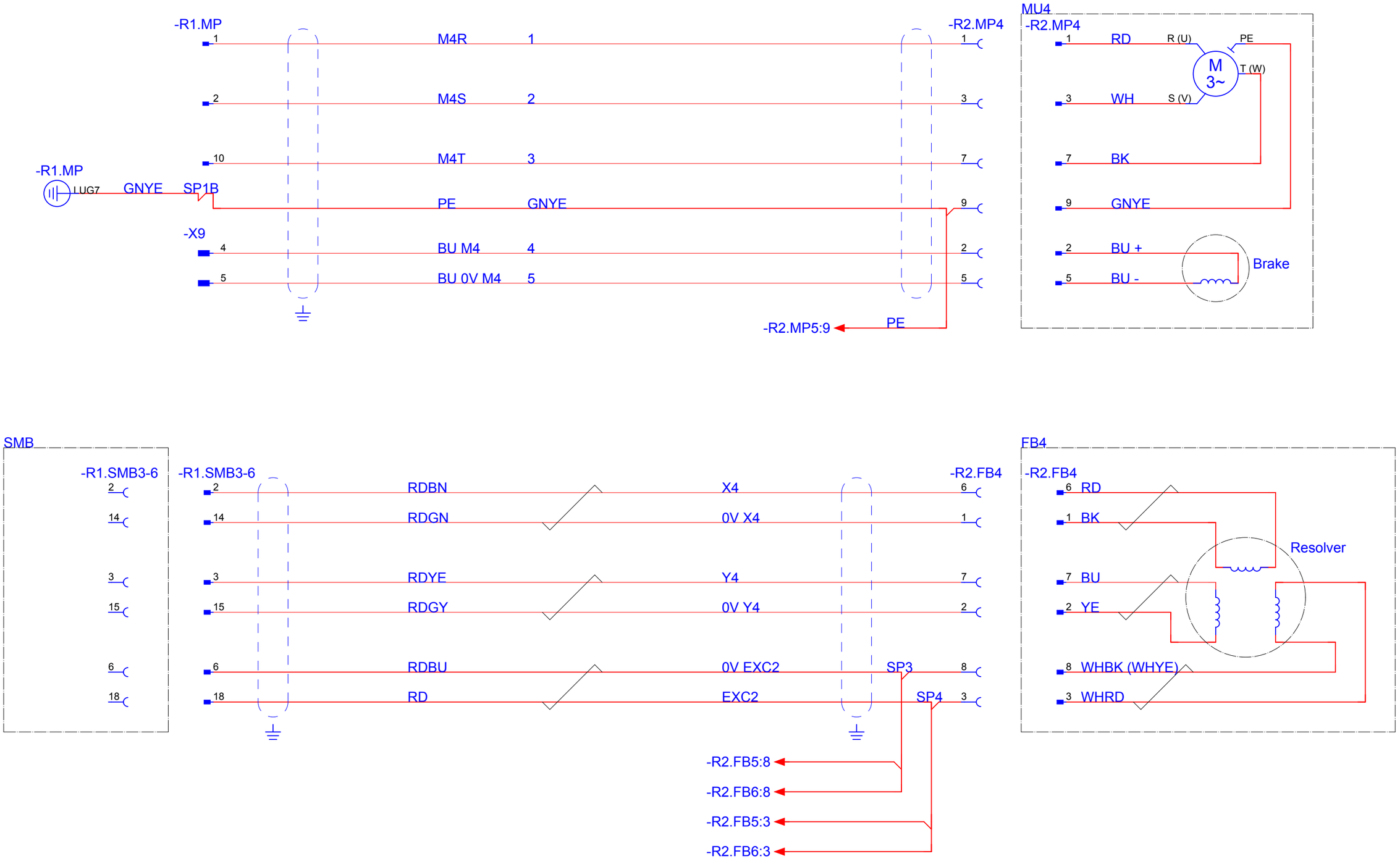

Latest revision:		Lab/Office: PRMP	IRB 4600 Axis 4	Status: 2009-05-06 APPROVED	Plant: = IRB 4600 Location: + Axis 4 Sublocation: +
Prepared by, date: Erik Mesaros	Approved by, date: Johan Moraeus			Document no. 3HAC029038-003	Rev. Ind 02

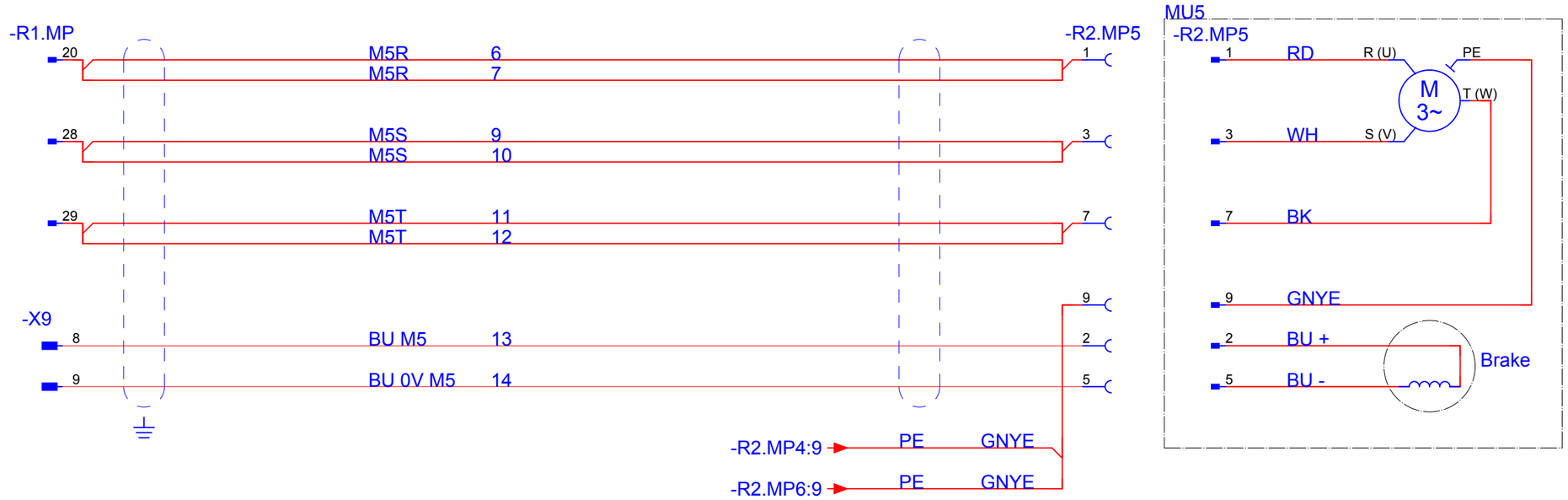

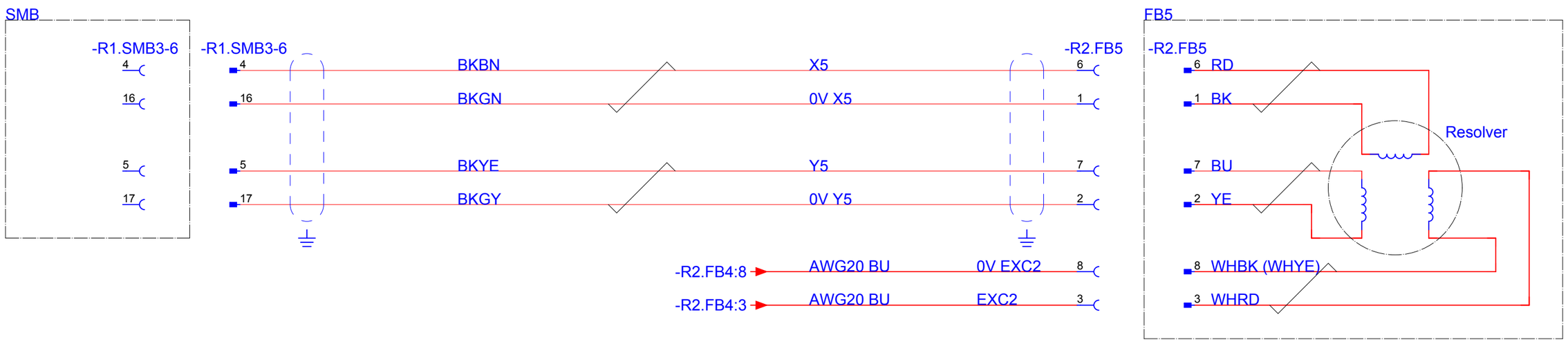

Latest revision:		Lab/Office: PRMP	IRB 4600 Axis 5	Status: 2009-05-06 APPROVED	Plant: = IRB 4600 Location: + Axis 5 Sublocation: +
Prepared by, date: Erik Mesaros	Approved by, date: Johan Moraeus			Document no. 3HAC029038-003	Rev. Ind 02

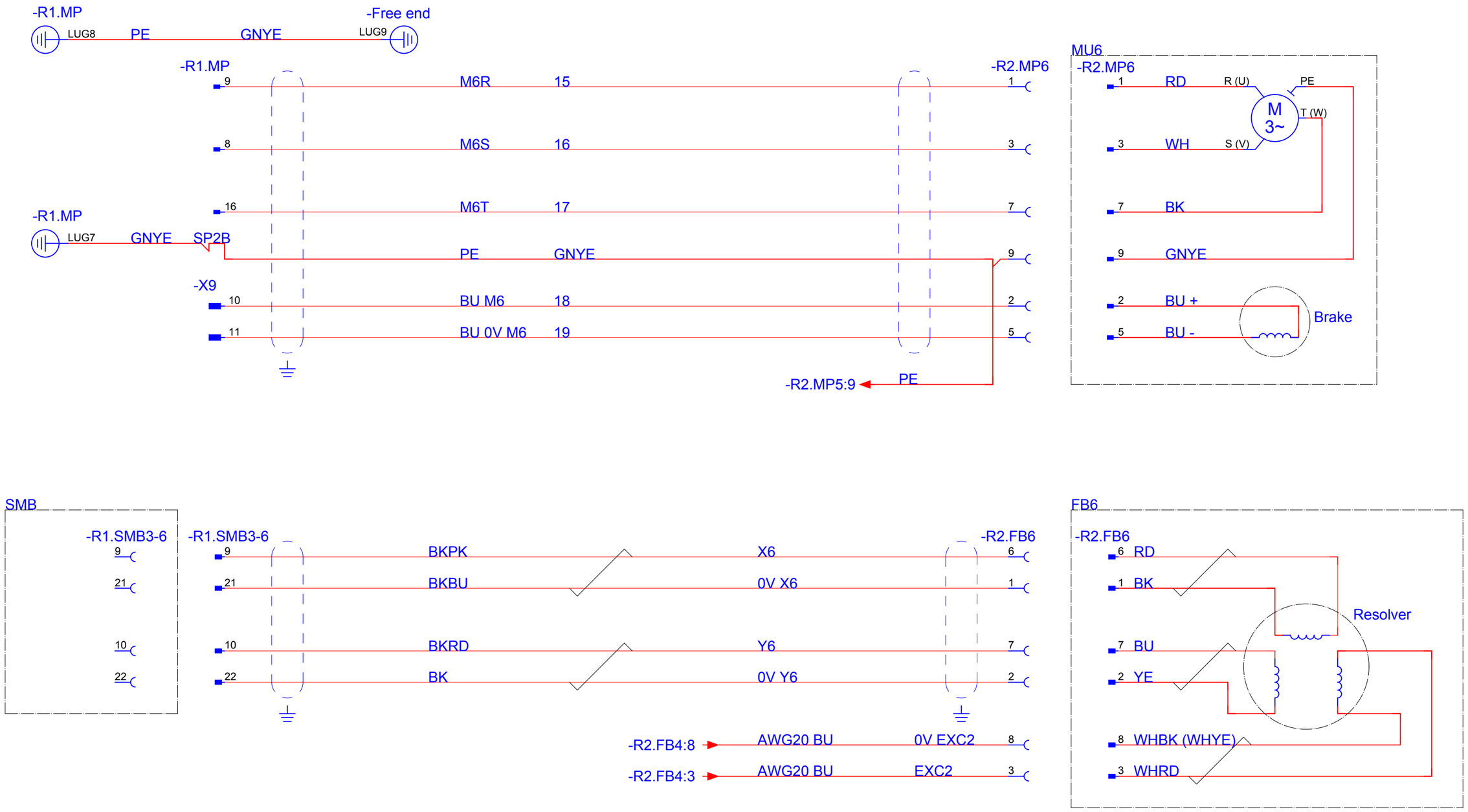

Latest revision:		Lab/Office: PRMP	IRB 4600 Axis 6	Status: 2009-05-06 APPROVED	Plant: = IRB 4600 Location: + Axis 6 Sublocation: +
Prepared by, date: Erik Mesaros	Approved by, date: Johan Moraeus			Document no. 3HAC029038-003	Rev. Ind 02

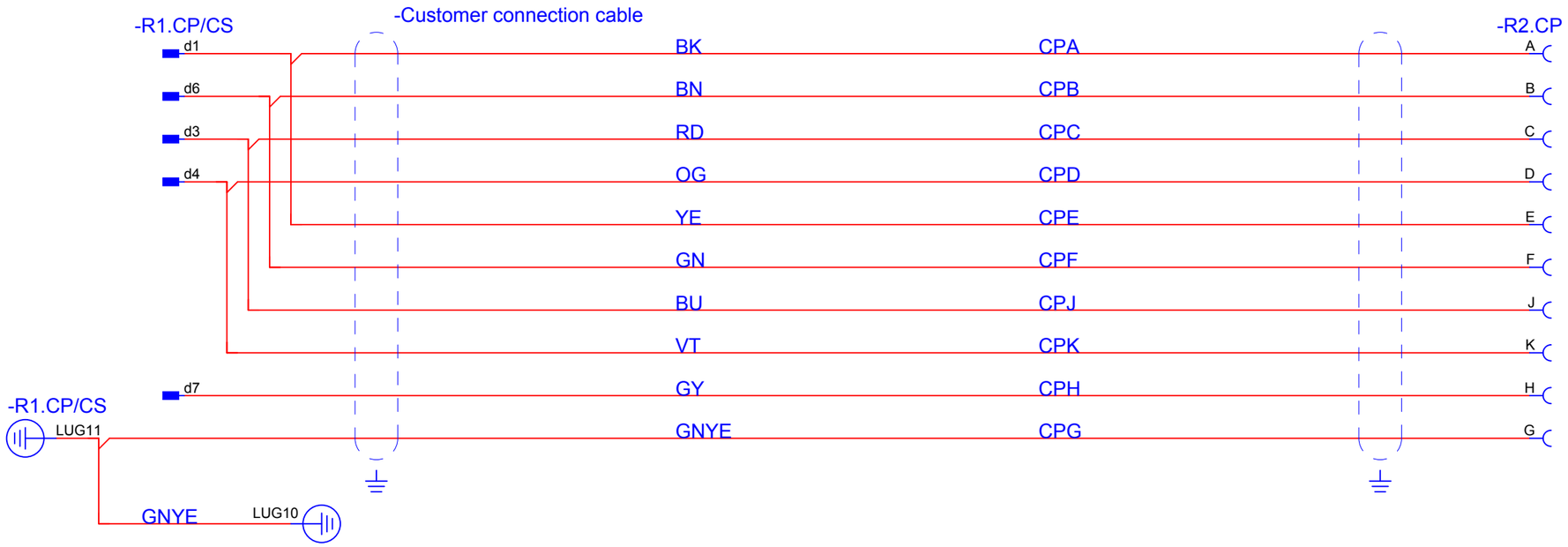

Latest revision:		Lab/Office: PRMP	IRB 4600 Customer connection	Status: 2009-05-06 APPROVED	Plant: = IRB 4600 Location: + CP/CS Sublocation: +
Prepared by, date: Erik Mesaros	Approved by, date: Johan Moraeus			Document no. 3HAC029038-003	Rev. Ind 02

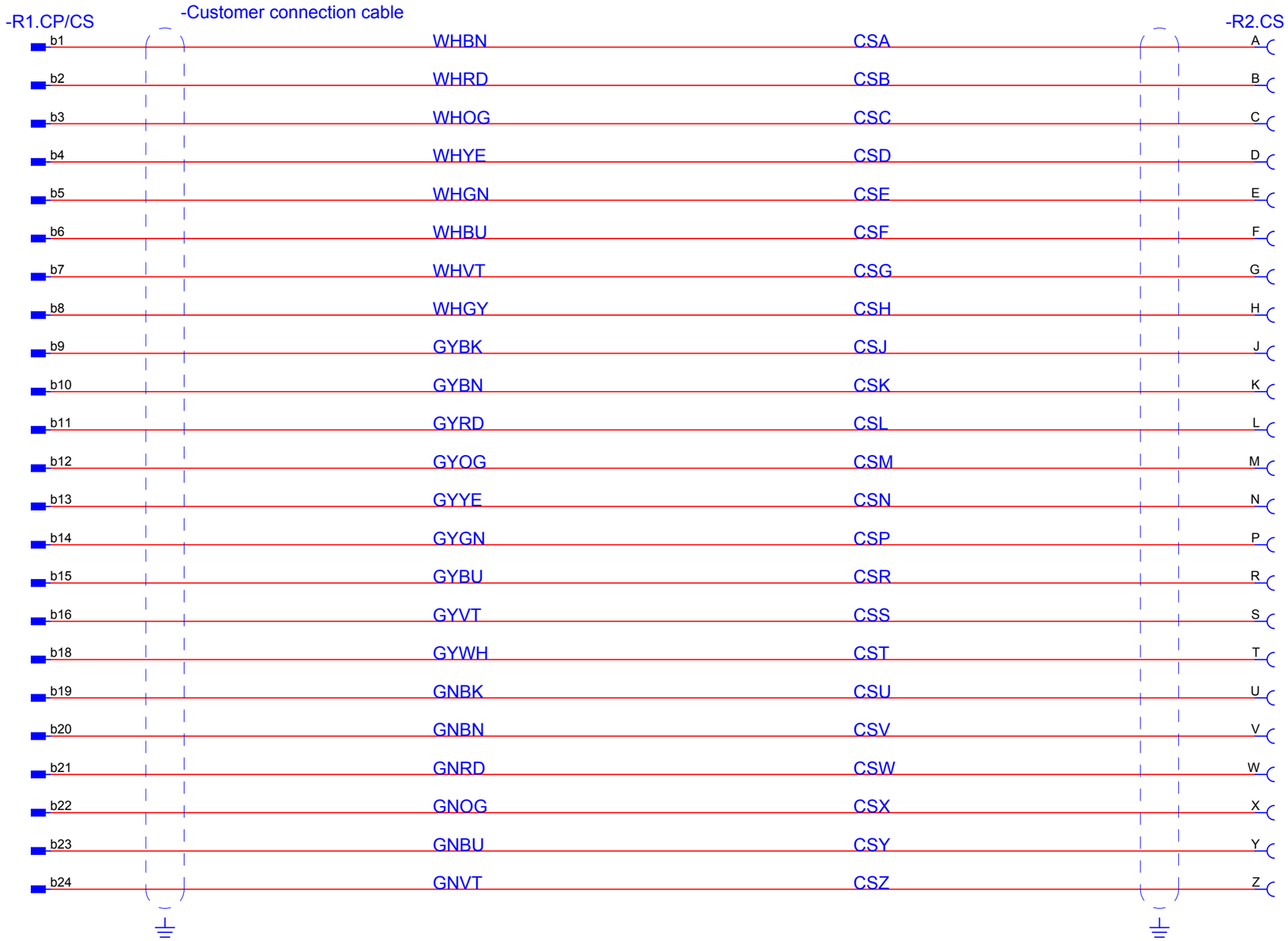

Latest revision:		Lab/Office: PRMP	IRB 4600 Customer connection	Status: 2009-05-06 APPROVED	Plant: = IRB 4600 Location: + CP/CS Sublocation: +
Prepared by, date: Erik Mesaros	Approved by, date: Johan Moraeus			Document no. 3HAC029038-003	Rev. Ind 02

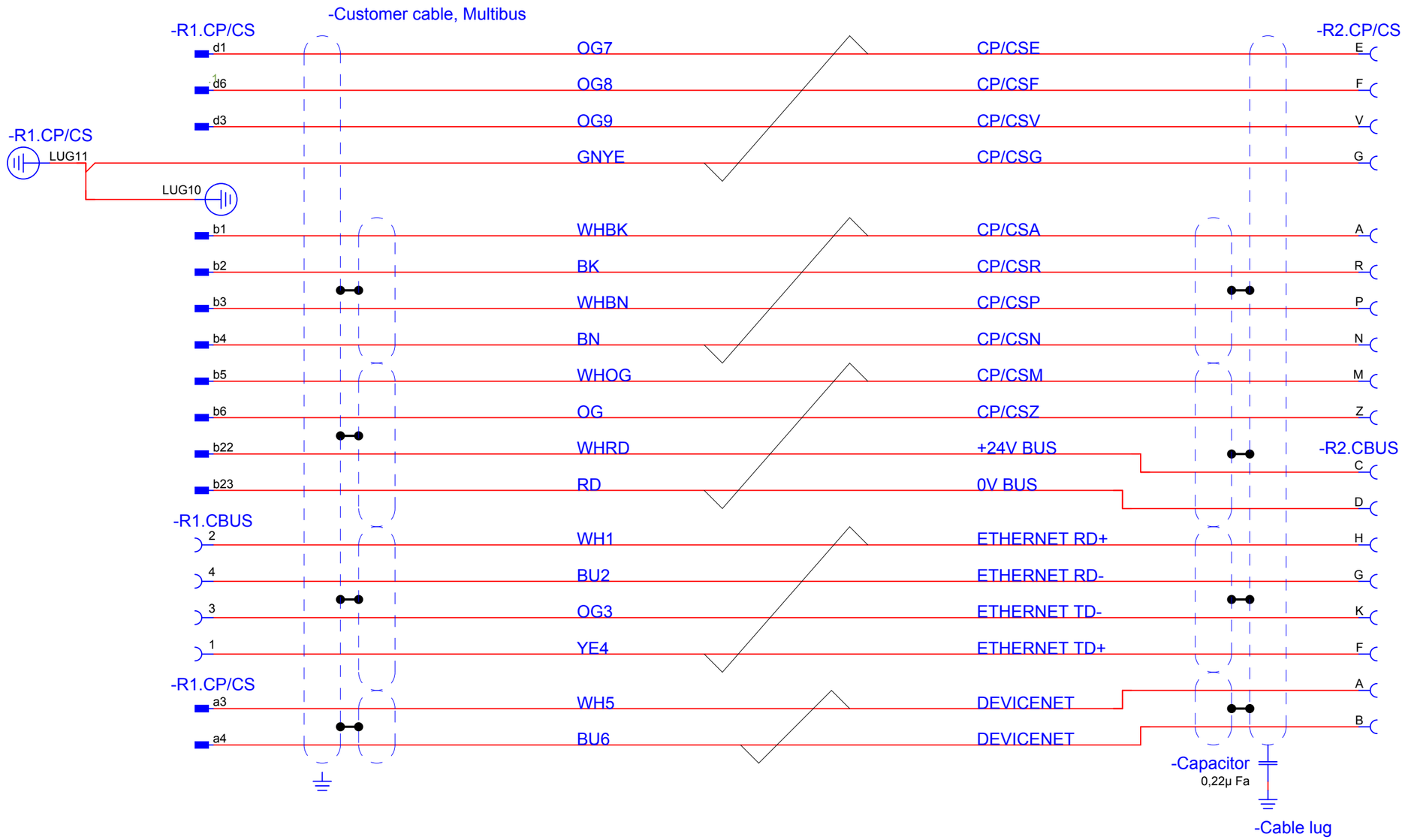

Latest revision:		Lab/Office: PRMP	IRB 4600 Multibus	Status: 2009-05-06 APPROVED	Plant: = IRB 4600 Location: + Multibus Sublocation: +
Prepared by, date: Erik Mesaros	Approved by, date: Johan Moraeus			Document no. 3HAC029038-003	Rev. Ind 02 / Page 110 / Next / Total 16

3HAC033453-001, Revision A, en

ABB Robotics
S-721 68 VÄSTERÅS
SWEDEN
Telephone: +46 (0) 21 344000
Telefax: +46 (0) 21 132592