Master's thesis

Trondheim, 2015

Kasper Linnestad

NTNU
Norwegian University of
Science and Technology
Faculty of Natural
Sciences and Technology
Department of Chemical Engineering

Kasper Linnestad

Model predictive control of a polyolefin reactor

Trondheim, June 2015

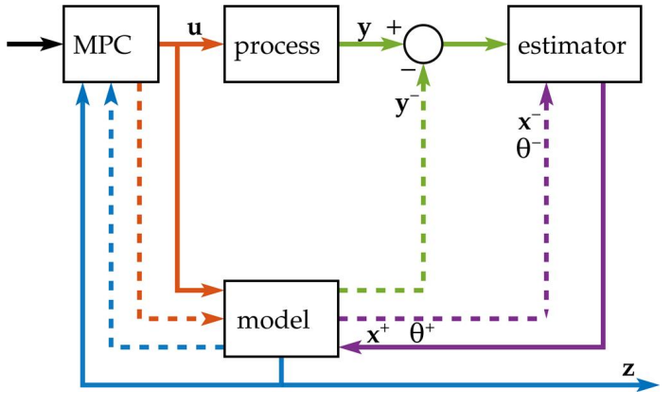

NTNU – Trondheim
Norwegian University of
Science and Technology

NTNU – Trondheim
Norwegian University of
Science and Technology